# Programming Manual

## HP 70000 Modular Spectrum Analyzer HP 70900B Local Oscillator Source-Controlled Modules

HP Part No. 70900-90284
Printed in USA March 1994

Edition A.0.0

**Notice**

The information contained in this document is subject to change without notice.

Hewlett-Packard makes no warranty of any kind with regard to this material, including, but not limited to, the implied warranties of merchantability and fitness for a particular purpose. Hewlett-Packard shall not be liable for errors contained herein or for incidental or consequential damages in connection with the furnishing, performance, or use of this material.

**Restricted Rights Legend.**

Use, duplication, or disclosure by the U.S. Government is subject to restrictions as set forth in subparagraph (c) (1) (ii) of the Rights in Technical Data and Computer Software clause at DFARS 252.227-7013 for DOD agencies, and subparagraphs (c) (1) and (c) (2) of the Commercial Computer Software Restricted Rights clause at FAR 52.227-19 for other agencies.

©Copyright Hewlett-Packard Company 1991—1994
All Rights Reserved. Reproduction, adaptation, or translation without prior written permission is prohibited, except as allowed under the copyright laws.
1400 Fountaingrove Parkway, Santa Rosa, CA 95403-1799, USA

## Certification

Hewlett-Packard Company certifies that this product met its published specifications at the time of shipment from the factory. Hewlett-Packard further certifies that its calibration measurements are traceable to the United States National Institute of Standards and Technology, to the extent allowed by the Institute's calibration facility, and to the calibration facilities of other International Standards Organization members.

## Warranty

This Hewlett-Packard instrument product is warranted against defects in material and workmanship for a period of one year from date of shipment. During the warranty period, Hewlett-Packard Company will, at its option, either repair or replace products which prove to be defective.

For warranty service or repair, this product must be returned to a service facility designated by Hewlett-Packard. Buyer shall prepay shipping charges to Hewlett-Packard and Hewlett-Packard shall pay shipping charges to return the product to Buyer. However, Buyer shall pay all shipping charges, duties, and taxes for products returned to Hewlett-Packard from another country.

Hewlett-Packard warrants that its software and firmware designated by Hewlett-Packard for use with an instrument will execute its programming instructions when properly installed on that instrument. Hewlett-Packard does not warrant that the operation of the instrument, or software, or firmware will be uninterrupted or error-free.

LIMITATION OF WARRANTY

The foregoing warranty shall not apply to defects resulting from improper or inadequate maintenance by Buyer, Buyer-supplied software or interfacing, unauthorized modification or misuse, operation outside of the environmental specifications for the product, or improper site preparation or maintenance.

NO OTHER WARRANTY IS EXPRESSED OR IMPLIED. HEWLETT-PACKARD SPECIFICALLY DISCLAIMS THE IMPLIED WARRANTIES OF MERCHANTABILITY AND FITNESS FOR A PARTICULAR PURPOSE.

EXCLUSIVE REMEDIES

THE REMEDIES PROVIDED HEREIN ARE BUYER'S SOLE AND EXCLUSIVE REMEDIES. HEWLETT-PACKARD SHALL NOT BE LIABLE FOR ANY DIRECT, INDIRECT, SPECIAL, INCIDENTAL, OR CONSEQUENTIAL DAMAGES, WHETHER BASED ON CONTRACT, TORT, OR ANY OTHER LEGAL THEORY.

## Assistance

*Product maintenance agreements and other customer assistance agreements are available for Hewlett-Packard products.*

*For any assistance, contact your nearest Hewlett-Packard Sales and Service Office.*

## Safety Symbols

The following safety symbols are used throughout this manual. Familiarize yourself with each of the symbols and its meaning before operating this instrument.

| | |
|---|---|
| **CAUTION** | The *CAUTION* sign denotes a hazard. It calls attention to a procedure which, if not correctly performed or adhered to, could result in damage to or destruction of the product or the user's work. Do not proceed beyond a *CAUTION* sign until the indicated conditions are fully understood and met. |
| **WARNING** | **The *WARNING* sign denotes a hazard. It calls attention to a procedure which, if not correctly performed or adhered to, could result in injury to the user. Do not proceed beyond a *WARNING* sign until the indicated conditions are fully understood and met.** |
| **DANGER** | **The *DANGER* sign denotes an imminent hazard to people. It warns the reader of a procedure which, if not correctly performed or adhered to, could result in injury or loss of life. Do not proceed beyond a *DANGER* sign until the indicated conditions are fully understood and met.** |

## General Safety Considerations

**WARNING**

- **Before this instrument is switched on, make sure it has been properly grounded through the protective conductor of the ac power cable to a socket outlet provided with protective earth contact.**

  **Any interruption of the protective (grounding) conductor, inside or outside the instrument, or disconnection of the protective earth terminal can result in personal injury.**

- **There are many points in the instrument which can, if contacted, cause personal injury. Be extremely careful.**

  **Any adjustments or service procedures that require operation of the instrument with protective covers removed should be performed only by trained service personnel.**

**CAUTION** Before this instrument is switched on, make sure its primary power circuitry has been adapted to the voltage of the ac power source.

Failure to set the ac power input to the correct voltage could cause damage to the instrument when the ac power cable is plugged in.

## Modules Supported by this Manual

- HP 70300A RF tracking generator
- HP 70301A microwave tracking generator
- HP 70310A precision frequency reference
- HP 70600A preselector
- HP 70601A preselector
- HP 70620A/B preamplifier
- HP 70621A preamplifier
- HP 70700A digitizer
- HP 70810B lightwave section
- HP 70900B local oscillator source
- HP 70902A IF section
- HP 70903A IF section
- HP 70904A RF section
- HP 70905A/B RF section
- HP 70906A/B RF section
- HP 70907A/B external millimeter interface module
- HP 70908A RF section
- HP 70909A RF section
- HP 70910A RF section
- HP 70911A WB IF section

# Contents


**1. Programming Fundamentals**

Overview of Programming Features . . . . . 1-2
Set the Measurement Range . . . . . 1-2
Process Information with the Math and Move Commands . . . . . 1-3
Return Value to Computer . . . . . 1-3
Create New Functions . . . . . 1-4
Activate a User-Defined Function with a Front Panel Key . . . . . 1-4
Create User-Defined Variables and Trace Arrays . . . . . 1-5
Enter Information From the Front Panel During Remote Control . . . . . 1-5
Write a message on the spectrum analyzer display . . . . . 1-5
Draw a picture on the spectrum analyzer display . . . . . 1-6
Monitor Spectrum Analyzer Operation By Returning the Value Of the Status Byte To the Computer . . . . . 1-6
Installation for Remote Operation . . . . . 1-7
Setup Procedure . . . . . 1-7
Setting the HP-IB and HP-MSIB Addresses with Address Switches . . . . . 1-8
HP 70900B Local Oscillator Source Switches . . . . . 1-9
Changing the HP-IB Address with Front-Panel Controls . . . . . 1-11
Memory Card . . . . . 1-11
Communicating with the Spectrum Analyzer . . . . . 1-14
Syntax Requirements . . . . . 1-14
Control of Instrument Settings . . . . . 1-15
Local and Remote Control Indicators . . . . . 1-17
Initial Program Considerations . . . . . 1-18
Initialize Spectrum-Analyzer State . . . . . 1-18
Assign Input/Output Path . . . . . 1-18
Calibrate Spectrum Analyzer . . . . . 1-19
Program Timing . . . . . 1-20
Additional Timing Commands . . . . . 1-22
Data Transfer to Controller . . . . . 1-23
Returning Trace Data . . . . . 1-23
Formatting Trace-Data Output to the Controller . . . . . 1-26
TDF P: Return Decimal Numbers in Parameter Units . . . . . 1-26
TDF M: Return Decimal Numbers in Measurement Units . . . . . 1-26
TDF B: Return Binary Numbers in Measurement Units . . . . . 1-27
TDF A and TDF I: Return Block-Data Fields in Measurement Units . . . . . 1-27
Transmission Sequence of Data on the HP-IB . . . . . 1-27
Formatting the Computer . . . . . 1-28
Trace-Data Format Examples . . . . . 1-28
Math Functions, Variables, and Trace Arrays . . . . . 1-30
Units . . . . . 1-30
Parameter Units . . . . . 1-30
Measurement Units . . . . . 1-30
Position Units and Trace Elements . . . . . 1-31
Variables and Traces . . . . . 1-31
Variables . . . . . 1-32

Traces . . . 1-32
Catalog of Internal Memory . . . 1-33
Math and Move Commands . . . 1-34
Four Rules for Trace Math . . . 1-35
To Avoid Truncation of Data . . . 1-35
The Spectrum Analyzer Truncates Numbers . . . 1-36
When the Source is a Real Number or Variable and the Destination is a Trace Array or Element, Use the MEASU Command to Preserve Decimal Values and Yield Parameter Units . . . 1-36
To Achieve the Best Accuracy, Use a Single Point for the Destination, Such as a Trace Element or a Variable . . . 1-39
Using Predefined Functions as Sources . . . 1-40
Storing New Functions in the Spectrum Analyzer . . . 1-43
Storing a User-Defined Function with the FUNCDEF Command . . . 1-43
Storing an Active User-Defined Function with the ACTDEF Command . . . 1-46
Catalog of Internal Memory . . . 1-47
Branching, Looping, and Interrupting . . . 1-47
If ... Then . . . 1-47
Repeat ... Until . . . 1-47
Abort . . . 1-48
Executing User-Defined Functions . . . 1-52
Executing User-Defined Functions with a Computer . . . 1-52
Executing User-Defined Functions with Front-Panel Keys . . . 1-52
Illegal Operations . . . 1-55
Memory . . . 1-56
Memory Card . . . 1-59
Erasing Memory . . . 1-59
Erasing User Memory . . . 1-61
Preventing Erasure of User Memory . . . 1-62
Conserving Memory . . . 1-63
Monitoring System Operation . . . 1-64
Interrupt Process . . . 1-64
Analyzer Status-Byte Register . . . 1-64
The Service-Request Mask . . . 1-65
Service-Request Examples . . . 1-66
Monitoring System Operation without Using Service Requests . . . 1-69
Spectrum Analyzer Control of HP-IB . . . 1-70
OUTPUT and ENTER Commands . . . 1-70
Computer Control Versus Spectrum Analyzer Control of HP-IB . . . 1-71
Debugging Programs . . . 1-72
Creating Graphics . . . 1-73
Clearing the Display . . . 1-73
Two Graphics Techniques . . . 1-73
Pen Control . . . 1-74
Scale . . . 1-77
Positioning Graphics with the Origin Command . . . 1-79
Writing Text . . . 1-80
Displaying Variables . . . 1-81
Drawing Grids . . . 1-81
Using Instrument Windows to Reduce the Display Area for Measurement Results 1-82
Using Graphics Windows to Resize the Coordinate System . . . 1-83
Items . . . 1-87
Assigning Item Numbers . . . 1-87
Activating and Modifying Items . . . 1-88
Deleting Items . . . 1-91

Item Types . . . . . 1-91
Printing and Plotting the Contents of the Display . . . . . 1-92

**2. Language Reference**
Syntax Diagrams . . . . . 2-1
Syntax Diagram Tables . . . . . 2-2
ABORT . . . . . 2-6
ABS . . . . . 2-8
ACTDEF . . . . . 2-9
ACTPARM . . . . . 2-13
ADAPBPCTL . . . . . 2-14
ADAPBTL . . . . . 2-15
ADBTL . . . . . 2-16
ADC . . . . . 2-17
ADCTL . . . . . 2-19
ADD . . . . . 2-20
AMB . . . . . 2-22
AMBMC . . . . . 2-24
AMBMCPL . . . . . 2-25
AMBPL . . . . . 2-26
AMC . . . . . 2-28
AMCPL . . . . . 2-29
AMETER . . . . . 2-30
AMPCOR . . . . . 2-31
AMPU . . . . . 2-33
ANNOFF . . . . . 2-38
ANNOT . . . . . 2-39
APB . . . . . 2-40
APBDCTL . . . . . 2-41
ASWP . . . . . 2-42
AT . . . . . 2-43
AUNITS . . . . . 2-45
AVG . . . . . 2-47
AXB . . . . . 2-49
AXC . . . . . 2-50
BIT . . . . . 2-51
BLANK . . . . . 2-53
BLANKFT . . . . . 2-54
BML . . . . . 2-56
BP . . . . . 2-57
BTC . . . . . 2-58
BXC . . . . . 2-59
CAL . . . . . 2-60
CALCOR . . . . . 2-61
CALFREQ . . . . . 2-63
CALPWR . . . . . 2-65
CALSRC . . . . . 2-67
CATALOG . . . . . 2-69
CF . . . . . 2-72
CHEIGHT . . . . . 2-74
CLRDSP . . . . . 2-76
CLRPAVG . . . . . 2-77
CLRW . . . . . 2-78
CLS . . . . . 2-79
CNVLOSS . . . . . 2-80

COMPRESS . . . 2-82
CONCAT . . . 2-84
CONFIG . . . 2-86
CONTS . . . 2-87
CORTOLIM . . . 2-88
COUPLE . . . 2-89
CPLAVG . . . 2-90
CPLDET . . . 2-92
CWIDTH . . . 2-93
DA . . . 2-94
DEBUG . . . 2-95
DELETE . . . 2-97
DET . . . 2-98
DETSEL . . . 2-100
DISPOSE . . . 2-102
DISPU . . . 2-105
DIV . . . 2-106
DL . . . 2-108
DONE . . . 2-110
DSPLY . . . 2-111
DSPMODE . . . 2-113
DSPTEXT . . . 2-115
DWINDOW . . . 2-117
ENTER . . . 2-120
ERASE . . . 2-122
ERR . . . 2-123
EXP . . . 2-124
EXTIF . . . 2-126
EXTVID . . . 2-127
FA . . . 2-129
FALIMIT . . . 2-130
FB . . . 2-132
FETCH . . . 2-133
FFT . . . 2-134
FFTKNL . . . 2-139
FLIMIT . . . 2-140
FOFFSET . . . 2-141
FORMAT . . . 2-142
FREQU . . . 2-143
FS . . . 2-148
FULBAND . . . 2-149
FUNCDEF . . . 2-151
GRAPH . . . 2-154
GRAT . . . 2-156
GRATSCRL . . . 2-157
GRID . . . 2-158
HD . . . 2-160
HNLOCK . . . 2-161
HP . . . 2-163
ID . . . 2-164
IDCF . . . 2-165
IDFREQ . . . 2-166
IDMODE . . . 2-168
IDN . . . 2-170
IDSTAT . . . 2-171

IF/THEN . . . . . 2-172
IFTKNL . . . . . 2-174
INPUT . . . . . 2-175
INPUTMOD . . . . . 2-176
INT . . . . . 2-178
INZ . . . . . 2-179
IP . . . . . 2-180
IT . . . . . 2-187
IWINDOW . . . . . 2-190
KEYCLR . . . . . 2-191
KEYDEF . . . . . 2-192
KEYPST . . . . . 2-195
KS~ . . . . . 2-196
LAMBDA . . . . . 2-197
LG . . . . . 2-198
LIMIAMP . . . . . 2-200
LIMIBEEP . . . . . 2-202
LIMIBOT . . . . . 2-203
LIMIDEL . . . . . 2-204
LIMIDONE . . . . . 2-205
LIMIEDIT . . . . . 2-206
LIMIFAIL . . . . . 2-207
LIMIFREQ . . . . . 2-208
LIMIHALF . . . . . 2-210
LIMILINE . . . . . 2-211
LIMINEXT . . . . . 2-213
LIMIRCL . . . . . 2-214
LIMIREL . . . . . 2-215
LIMISAV . . . . . 2-216
LIMISCRL . . . . . 2-217
LIMISDEL . . . . . 2-218
LIMISEG . . . . . 2-219
LIMITEST . . . . . 2-221
LIMITYPE . . . . . 2-223
LIMTOCOR . . . . . 2-224
LINES . . . . . 2-225
LINET . . . . . 2-226
LN . . . . . 2-228
LOAD . . . . . 2-229
LOG . . . . . 2-231
LOSTART . . . . . 2-233
LOSTOP . . . . . 2-235
MBIAS . . . . . 2-237
MBIASPK . . . . . 2-238
MBMAX . . . . . 2-239
MBMIN . . . . . 2-240
MBRES . . . . . 2-241
MDS . . . . . 2-242
MEAN . . . . . 2-244
MEASU . . . . . 2-246
MEASURE . . . . . 2-252
MEM . . . . . 2-254
MIL . . . . . 2-256
MIN . . . . . 2-258
MINH . . . . . 2-260

MK . . . . . 2-261
MKA . . . . . 2-262
MKACT . . . . . 2-264
MKAL . . . . . 2-265
MKAR . . . . . 2-267
MKBW . . . . . 2-269
MKBWA . . . . . 2-271
MKCF . . . . . 2-273
MKCONT . . . . . 2-274
MKD . . . . . 2-275
MKDACT . . . . . 2-277
MKDREFA . . . . . 2-278
MKDREFF . . . . . 2-280
MKF . . . . . 2-282
MKFABS . . . . . 2-284
MKMIN . . . . . 2-285
MKN . . . . . 2-286
MKNOISE . . . . . 2-288
MKOFF . . . . . 2-290
MKP . . . . . 2-291
MKPABS . . . . . 2-292
MKPAUSE . . . . . 2-293
MKPITX . . . . . 2-294
MKPK . . . . . 2-296
MKPX . . . . . 2-298
MKREAD . . . . . 2-300
MKRELPWR . . . . . 2-302
MKRINSYS . . . . . 2-304
MKRL . . . . . 2-306
MKSP . . . . . 2-307
MKSS . . . . . 2-308
MKSTOP . . . . . 2-309
MKT . . . . . 2-310
MKTRACE . . . . . 2-312
MKTRACK . . . . . 2-313
MKTV . . . . . 2-314
MKTYPE . . . . . 2-316
ML . . . . . 2-317
MOD . . . . . 2-319
MODADD . . . . . 2-321
MODID . . . . . 2-324
MOV . . . . . 2-326
MPY . . . . . 2-327
MSG . . . . . 2-329
MSI . . . . . 2-330
MXM . . . . . 2-332
MXMH . . . . . 2-334
NORM . . . . . 2-335
NSTART . . . . . 2-337
NSTATE . . . . . 2-339
NSTOP . . . . . 2-341
ONEOS . . . . . 2-343
ONMENU . . . . . 2-345
ONMKR . . . . . 2-347
ONUSER . . . . . 2-349

ONWINDOW . . . . . 2-351
OP . . . . . 2-353
OPTATN . . . . . 2-354
OPTMODE . . . . . 2-356
OPTPWR . . . . . 2-357
OR . . . . . 2-359
OUTPUT . . . . . 2-361
OVRSWP . . . . . 2-363
OVRW . . . . . 2-364
PA . . . . . 2-365
PADC . . . . . 2-367
PATHLOCK . . . . . 2-368
PAUSE . . . . . 2-369
PC . . . . . 2-370
PCDELTA . . . . . 2-371
PD . . . . . 2-372
PDA . . . . . 2-374
PDF . . . . . 2-376
PEAKS . . . . . 2-378
PEN . . . . . 2-382
PERASE . . . . . 2-384
PERSIST . . . . . 2-386
PINPUT . . . . . 2-387
PLOT . . . . . 2-388
POSU . . . . . 2-390
POWERON . . . . . 2-394
PP . . . . . 2-395
PR . . . . . 2-396
PREAMP . . . . . 2-397
PREFX . . . . . 2-398
PROTECT . . . . . 2-400
PRSDAC . . . . . 2-404
PRSENABL . . . . . 2-406
PRSHYST . . . . . 2-407
PSTATE . . . . . 2-408
PU . . . . . 2-409
PURGE . . . . . 2-410
PWRAVG . . . . . 2-411
PWRBAR . . . . . 2-413
PWRBARON . . . . . 2-414
PWRBW . . . . . 2-415
PWRMODE . . . . . 2-418
RB . . . . . 2-419
RBR . . . . . 2-421
RCLD . . . . . 2-422
RCLS . . . . . 2-423
RCLT . . . . . 2-424
RCLU . . . . . 2-425
RCVRMODE . . . . . 2-426
READMENU . . . . . 2-428
RELADC . . . . . 2-430
RELHPIB . . . . . 2-432
RELMOD . . . . . 2-433
REPEAT/UNTIL . . . . . 2-435
RETURN . . . . . 2-437

REV . . . . . 2-439
RL . . . . . 2-440
RLPOS . . . . . 2-442
RMS . . . . . 2-443
ROFFSET . . . . . 2-445
RQS . . . . . 2-446
RSPSVTY . . . . . 2-448
SAVED . . . . . 2-450
SAVES . . . . . 2-451
SAVET . . . . . 2-453
SAVEU . . . . . 2-454
SCALE . . . . . 2-455
SER . . . . . 2-457
SG . . . . . 2-459
SIGDEL . . . . . 2-461
SIGID . . . . . 2-462
SMOOTH . . . . . 2-463
SNGLS . . . . . 2-465
SP . . . . . 2-466
SQR . . . . . 2-468
SRCALC . . . . . 2-469
SRCAM . . . . . 2-470
SRCAMF . . . . . 2-472
SRCAT . . . . . 2-473
SRCBLNK . . . . . 2-475
SRCMOD . . . . . 2-476
SRCOSC . . . . . 2-477
SRCPOFS . . . . . 2-478
SRCPSTP . . . . . 2-479
SRCPSWP . . . . . 2-481
SRCPWR . . . . . 2-483
SRCTK . . . . . 2-484
SRCTKPK . . . . . 2-486
SRQ . . . . . 2-487
SS . . . . . 2-488
ST . . . . . 2-490
STARTUP . . . . . 2-492
STATE . . . . . 2-494
STB . . . . . 2-495
STDEV . . . . . 2-498
STOR . . . . . 2-500
STORREF . . . . . 2-502
SUB . . . . . 2-505
SUM . . . . . 2-507
SUMSQR . . . . . 2-509
SWPMODE . . . . . 2-511
SYSCOR . . . . . 2-512
TDF . . . . . 2-513
TEST . . . . . 2-516
TEXT . . . . . 2-517
TH . . . . . 2-519
THREED . . . . . 2-520
THREEDH . . . . . 2-522
THREEDV . . . . . 2-524
TIME . . . . . 2-525

TITLE . . . . . 2-526
TM . . . . . 2-527
TP . . . . . 2-528
TRA/TRB/TRC . . . . . 2-530
TRCOND . . . . . 2-533
TRDEF . . . . . 2-535
TRDSP . . . . . 2-538
TRIGDEL . . . . . 2-539
TRPST . . . . . 2-541
TRSTAT . . . . . 2-542
TS . . . . . 2-543
TWNDOW . . . . . 2-545
USERERR . . . . . 2-547
USERKEY . . . . . 2-549
USERLOCK . . . . . 2-550
USERMSG . . . . . 2-551
USERWARN . . . . . 2-552
USRPWR . . . . . 2-554
USTATE . . . . . 2-555
VARDEF . . . . . 2-558
VARIANCE . . . . . 2-560
VAVG . . . . . 2-562
VB . . . . . 2-564
VBR . . . . . 2-565
VIEW . . . . . 2-566
VTDL . . . . . 2-567
VTH . . . . . 2-569
VTL . . . . . 2-570
VW . . . . . 2-571
WAIT . . . . . 2-572
WARN . . . . . 2-573
WARNCTRL . . . . . 2-575
XCH . . . . . 2-576
XERR . . . . . 2-577
XNOISE . . . . . 2-578
XWARN . . . . . 2-580
YLABELS . . . . . 2-582
ZERO . . . . . 2-584
ZOOMRB . . . . . 2-586

**3. Error Messages**

User Application Errors 0001 – 0999 . . . . . 3-2
Operating Errors 2000 – 2999 . . . . . 3-13
Hardware Warning Errors 6000 – 6999 . . . . . 3-22
Hardware Broken Errors 7000 – 7999 . . . . . 3-25
Computation Errors 8000 – 8999 . . . . . 3-35
Factory-Use Only Errors 9000 – 9999 . . . . . 3-36

**A. HP-IB and System-Level Language**
HP-IB Select Code and Address . . . . . A-1
The Enter and Output Statements . . . . . A-2
HP-IB Status Annunciators . . . . . A-2
HP-IB System-Level Commands . . . . . A-3

**B. Spectrum Analyzer Response to System-Level Commands**

**C. ASCII Codes, Control Codes, and Escape Characters**
American Standard Code for Information . . . . . C-2
Control Codes and Escape Characters . . . . . C-3
Position the Pen, Clear or Move Text, or Beep . . . . . C-3
Enhance Text . . . . . C-3
Change Color . . . . . C-4
Display-Functions Mode . . . . . C-4

**D. Interaction of Programming Commands and Memory**

**Glossary**

**Index**

# Figures


1-1. Spectrum-Analyzer HP-IB Address as shown on Address Map . . . . . 1-7
1-2. View Display Module on Address Map . . . . . 1-8
1-3. Address Switches on Local-Oscillator, IF-Section, and RF-Section Modules . . . 1-10
1-4. Inserting the Memory Card . . . . . 1-11
1-5. Battery Installation Date Code . . . . . 1-12
1-6. Memory Card Battery Replacement . . . . . 1-13
1-7. Invalid Trace Information . . . . . 1-20
1-8. Updated Trace Information . . . . . 1-21
1-9. Update Trace Information with TS Before Executing Marker Commands . . . 1-22
1-10. Program Structure for Storing User-Defined Function . . . . . 1-43
1-11. ABORT returns program operation to first predefined function that follows the user-defined function(s). . . . . 1-48
1-12. Draw a Rectangle with PA . . . . . 1-75
1-13. Draw a Rectangle with PR . . . . . 1-75
1-14. Draw Three Rectangles . . . . . 1-76
1-15. Default Positions for $P_1$ and $P_2$ . . . . . 1-77
1-16. Default Scale for $P_1$ and $P_2$ . . . . . 1-77
1-17. Set Scale in Terms of Degrees and Decibels . . . . . 1-78
1-18. Draw Box Without Offset . . . . . 1-79
1-19. Draw Box With Offset . . . . . 1-79
1-20. Write Text in the Title Line . . . . . 1-80
1-21. Display a Computer Variable . . . . . 1-81
1-22. Draw a Grid . . . . . 1-82
1-23. Reduce Display Size of Measurement Results . . . . . 1-83
1-24. Draw Box . . . . . 1-84
1-25. Create a Graphics Window . . . . . 1-84
1-26. Change Graphics Window Scale . . . . . 1-85
1-27. Offset Window Position . . . . . 1-85
1-28. Display Trace Data within a Graphics Window . . . . . 1-86
1-29. Display Two Items, a Box and a Triangle . . . . . 1-88
1-30. Blank Item . . . . . 1-89
1-31. Display Stored Item . . . . . 1-89
1-32. Offset Item Position . . . . . 1-90
1-33. Modify Shape of Item . . . . . 1-91
2-1. Syntax-Diagram Elements . . . . . 2-1
2-2. ABORT returns program operation to first predefined function that follows the user-defined function(s). . . . . 2-7
2-3. Hanning, Flat Top, and Uniform Trace Windows (Hamming not shown) . . . . 2-136
2-4. Fourier Transforms of Hanning, Flat Top, and Uniform Trace Windows . . . . 2-138
2-5. . . . . 2-257
2-6. . . . . 2-318
2-7. RETURN returns operation to first analyzer command or user-defined function that follows the user-defined function containing RETURN. . . . . 2-438
2-8. Hanning, Flat top, and Uniform Trace Window Shapes . . . . . 2-546
C-1. . . . . C-2

# Tables


1-1. Preferred Units Codes . . . . . 1-16
1-2. Parameter Units . . . . . 1-23
1-3. Trace Data Output Formats for Amplitude Information . . . . . 1-26
1-4. HP-IB Transmission Sequence for Different Trace-Data Formats (TDF) . . . . . 1-27
1-5. Computer Formats . . . . . 1-28
1-6. Parameter Units for Amplitude . . . . . 1-30
1-7. Math and Move Commands that Require Conversion with the MEASU Command 1-38
1-8. Commands Restricted to Use as Predefined Functions and Queries . . . . . 1-40
1-9. Compatible Functions . . . . . 1-41
1-10. Catalog of User Memory . . . . . 1-58
1-11. Commands that Erase or Protect User Memory . . . . . 1-60
1-12. Commands that Erase Reserved Memory . . . . . 1-61
1-13. Spectrum-Analyzer Status-Byte Register . . . . . 1-65
1-14. Commands Requiring the PD Command . . . . . 1-74
1-15. Commands Affected by the SCALE Command . . . . . 1-78
1-16. Commands that Modify Items . . . . . 1-88
1-17. Commands that can be Assigned to Items with the IT Command. . . . . 1-91
2-1. Rectangular Syntax Elements . . . . . 2-3
2-2. Separators, Terminators, and Commonly Used Arguments . . . . . 2-5
2-5. Behavior of Unit Arguments for ACTDEF Command . . . . . 2-12
2-6. Amplitude Units . . . . . 2-34
2-7. Internal Memory Contents . . . . . 2-103
2-8. Commands that Erase or Protect Internal Memory . . . . . 2-104
2-9. External Mixing Bands . . . . . 2-150
2-10. Programming Commands Executed or Affected by Instrument Preset . . . . . 2-181
2-11. Commands that Modify Graphics Items . . . . . 2-188
2-12. Commands that can be Assigned to Items with the IT command. . . . . 2-188
2-13. Standard File Prefixes for Files Names . . . . . 2-230
2-14. Parameter Units for Amplitude . . . . . 2-248
2-15. Math and Move Commands that May Require Conversion with the MEASU Command . . . . . 2-249
2-16. Marker Readout Information . . . . . 2-301
2-18. Commands that Erase Reserved Memory . . . . . 2-384
2-19. Commands that Erase or Protect User Memory . . . . . 2-385
2-20. User Memory Contents . . . . . 2-398
2-21. Commands that Erase or Protect User Memory . . . . . 2-402
2-22. Spectrum-Analyzer Service-Request Mask . . . . . 2-447
2-23. Spectrum-Analyzer Status-Byte Register . . . . . 2-487
2-24. Spectrum-Analyzer Status-Byte Register . . . . . 2-496
2-25. Description of User-Memory Catalog . . . . . 2-501
2-26. Trace Data Output Formats for Amplitude Information . . . . . 2-514
2-27. HP-IB Transmission Sequence for Different Trace-Data Formats (TDF) . . . . . 2-515
2-28. Catalog of Internal Memory . . . . . 2-556
B-1. Spectrum Analyzer Response to System-Level Commands . . . . . B-1
C-1. ASCII Characters (Codes 0 through 127) and HP 70004A color display Characters C-2
C-2. Control Codes . . . . . C-3

C-3. Escape Characters that Control the Pen, Clear Text, and Scroll Text . . . . . C-3
C-4. Escape Characters that Control Enhancements . . . . . C-4

# 1

# Programming Fundamentals

This chapter describes spectrum analyzer programming techniques. If your spectrum analyzer is not ready for computer control, refer to "Installation for Remote Operation".

These sections include an overview and give the essentials of spectrum analyzer programming:

| | |
|---|---|
| "Overview of Programming Features" | illustrates programming tasks that the spectrum analyzer can perform. After each example is a reference to programming instructions. |
| "Installation for Remote Operation" | describes how to set up the spectrum analyzer for remote operation, including addressing information. |
| "Communicating with the Spectrum Analyzer" | describes how to send the spectrum analyzer a message and interpret the front panel HP-IB indicators. |
| "Initial Program Considerations" | describes processes that should be completed at the beginning of a program to make it reliable. These include clearing the input buffer, presetting the spectrum analyzer settings, and executing the error-correction routines to calibrate portions of the spectrum analyzer. |
| "Program Timing" | describes how to time commands to control the measurement range and prevent data loss. |
| "Data Transfer to Controller" | describes how to return measurement results to the computer, and describes input/output techniques and optional trace-data formats. |
| "Math Functions, Variables, and Trace Arrays" | describes the kinds of units that define measurement results and describes how to manipulate measurement results and store them as variables and trace arrays in spectrum analyzer **internal memory**. |

The remaining sections are as follows:

| | |
|---|---|
| "Storing New Functions in the Spectrum Analyzer" | describes how to create user-defined functions and key menus. |
| "Memory" | describes internal and external memory. |
| "Monitoring System Operation" | describes how to interrupt computer operation with service requests or how to query the spectrum analyzer status-byte register. |
| "Spectrum Analyzer Control of HP-IB" | describes how to use the spectrum analyzer as a system controller. |
| "Debugging Programs" | describes a diagnostic tool that facilitates troubleshooting of faulty programs. |
| "Creating Graphics" | describes how to display pictures and text. |

# Overview of Programming Features

The operation of the modular spectrum analyzer can be controlled remotely with a unique set of commands. Most of the front panel functions can be executed with programming commands, which are listed at the "Command Summary" tab in Chapter 2.

Following are some of the tasks you can perform.

- Execute most front panel functions.
- Access, store, and process measurement results or parameters.
- Create and store custom functions, called **user-defined functions,** using flow-of-control commands.
- Activate user-defined functions with front panel keys.
- Create **user-defined variables** and **user-defined traces**.
- Monitor spectrum analyzer operation.

Here are some programming examples. See the text referred to after each example for more information.

## Set the Measurement Range

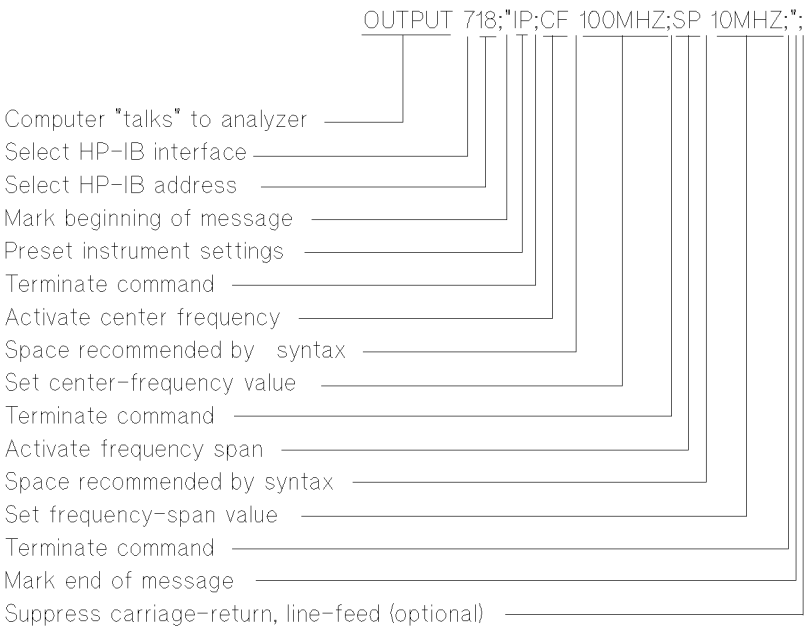


See "Communicating with the Spectrum Analyzer".

## Process Information with the Math and Move Commands

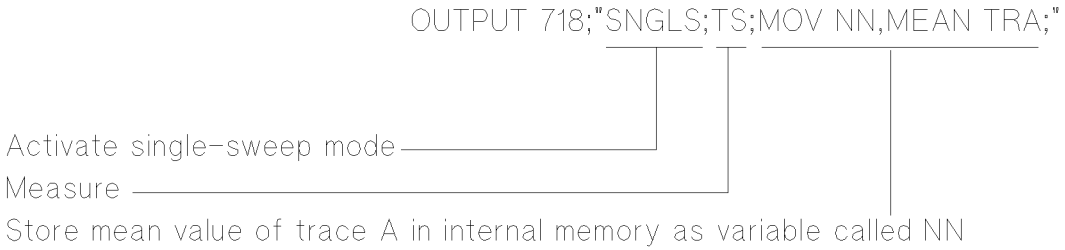


Refer to “Math Functions, Variables, and Trace Arrays”.

## Return Value to Computer

Refer to “Data Transfer to Controller”.

## Create New Functions

The following program displays “FAILED” if the marked signal level (MKA) exceeds the threshold level (TH).

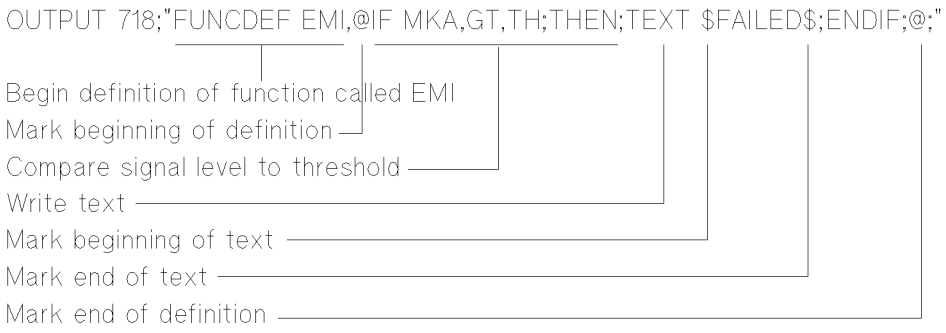


See “Storing New Functions in the Spectrum Analyzer”.

## Activate a User-Defined Function with a Front Panel Key

The following program line assigns the user-defined function called EMI, defined above, to key number 13.

See “Storing New Functions in the Spectrum Analyzer”.

### Create User-Defined Variables and Trace Arrays

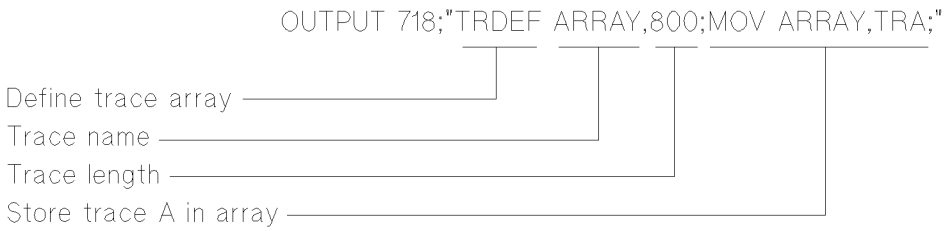


Refer to "Math Functions, Variables, and Trace Arrays".

### Enter Information From the Front Panel During Remote Control

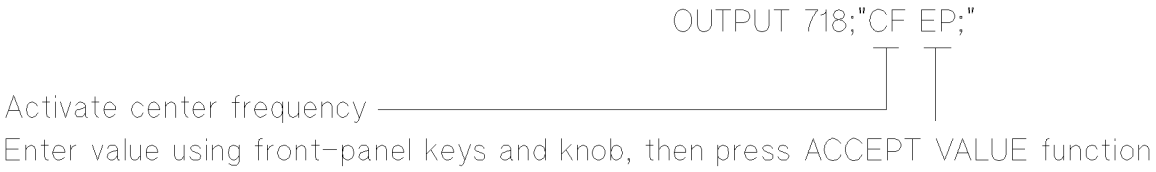


See "Communicating with the Spectrum Analyzer".

### Write a message on the spectrum analyzer display

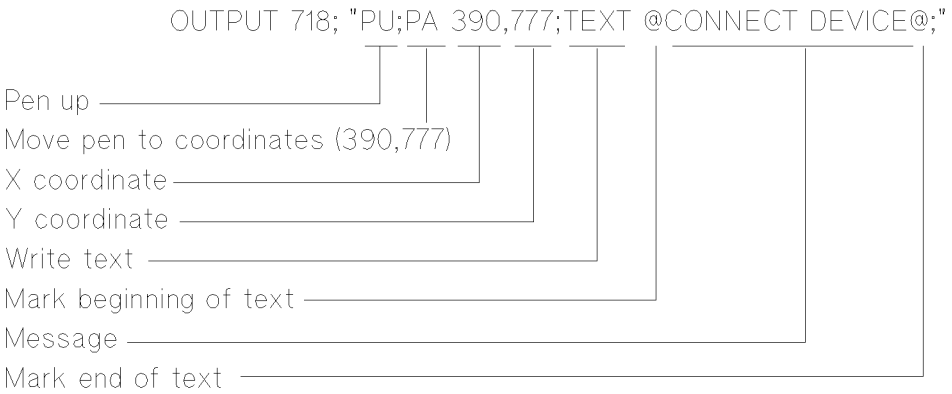


See "Creating Graphics".

## Draw a picture on the spectrum analyzer display

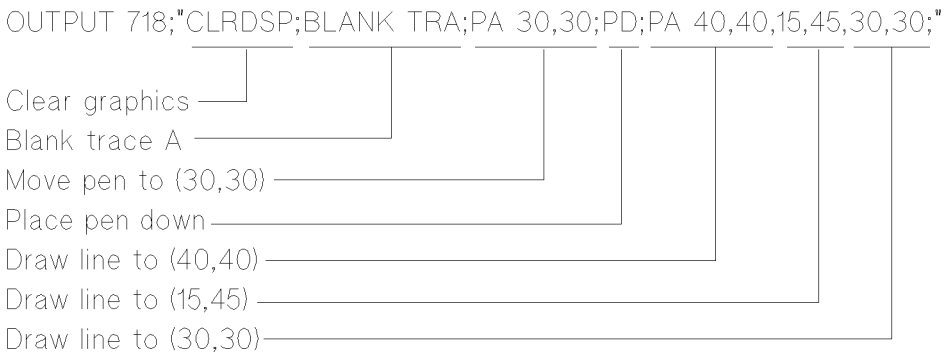


See “Creating Graphics”.

## Monitor Spectrum Analyzer Operation By Returning the Value Of the Status Byte To the Computer

See “Monitoring System Operation”.

# Installation for Remote Operation

The following instructions tell how to set up your equipment for remote operation.

## Setup Procedure

1. Connect computer, spectrum analyzer HP-IB connector, and other peripherals with HP-IB cables. The spectrum analyzer HP-IB connector is located at the back of the mainframe containing the HP 70900B local oscillator source. Most spectrum analyzers have a display, such as an HP 70004A color display, HP 70206A system graphics display, or HP 70205A graphics display. Be careful not to confuse the display HP-IB connector with the spectrum analyzer HP-IB connector.
2. Reset all instruments connected to the bus. Reset the spectrum analyzer by cycling power. Most peripherals like plotters or printers are reset by pressing a reset key. If you are not sure how to reset a device, cycle its power off, then on, to reset it.
3. Check HP-IB address of the spectrum analyzer on the address map.

   To view the map, press (DISPLAY), then press `Address Map` . Turn the front panel knob until the HP 70900B local oscillator source appears in the **address map** matrix. The HP-IB address is indicated next to the HP 70900B local oscillator source number. (The HP 70900B local oscillator source contains the firmware that controls spectrum analyzer operation and communicates with HP-IB.) The HP 70900B local oscillator source must be in row 0 for HP-IB access. (See Figure 1-1.) If the HP 70900B local oscillator source is not in row zero, set the HP-MSIB module address switch to row 0. (See Figure 1-3 and following text or refer to *HP 70000 Modular Spectrum Analyzer Installation and Verification Manual*

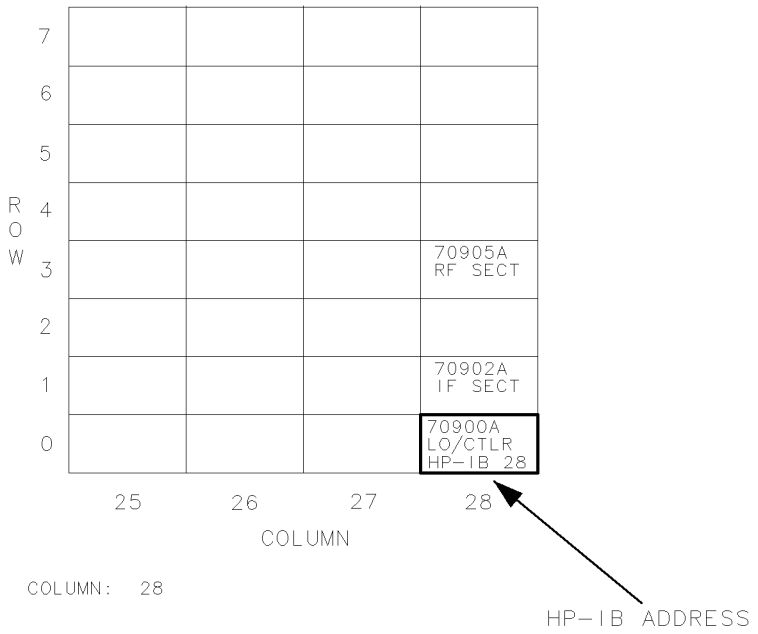


**Figure 1-1. Spectrum-Analyzer HP-IB Address as shown on Address Map**

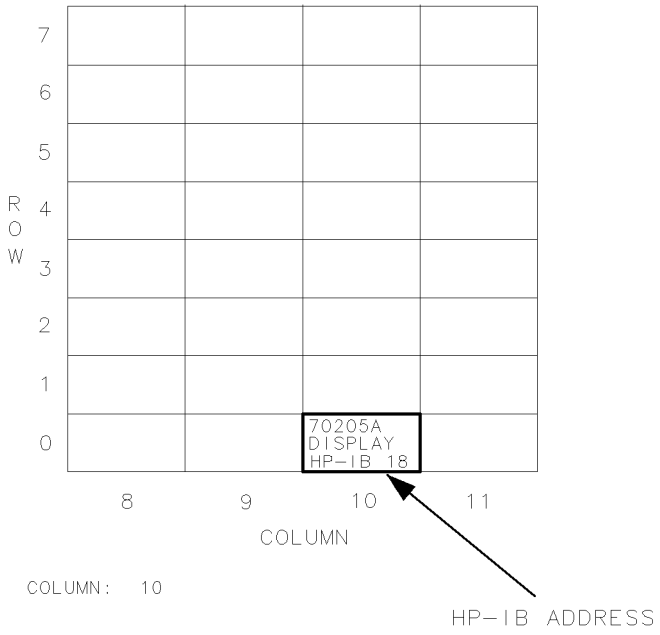


**Figure 1-2. View Display Module on Address Map**

4. Check system configuration on the address map. For normal spectrum analyzer operation, the local oscillator and display modules are positioned in the bottom row, row 0, of the **address map** with the other modules stacked in a column above or above and to the right of the HP 70900B local oscillator source. (See Figure 1-1 and Figure 1-2.) The column may contain empty spaces between modules. If your system is not configured properly, for installation instruction, refer to the *HP 70000 Modular Spectrum Analyzer Installation and Verification Manual.*

## Setting the HP-IB and HP-MSIB Addresses with Address Switches

Each spectrum analyzer module has a switch that sets the HP-MSIB address of the module and its HP-IB address, if applicable.

The switches are located on the side, top cover, or rear panel of the modules. Figure 1-3 shows the address switches for the different modules.

The column switches select the HP-IB address and correspond to the column-address numbers on the address map. The row switches correspond to the row-address numbers, positioning the modules vertically in the address map.

The row switches for the HP 70900B local oscillator source address must be set to 0 for HP-IB control of the spectrum analyzer.

---

**Note** HP-IB address 31 and HP-MSIB address 0, 31 are illegal and cannot be used.

---

Figure 1-3 shows how to set the address switches. The numbers in parenthesis indicate the binary value of the individual switches. The column or row address is the sum of the values in the parentheses beside each switch that is set to 1. For example, a column address of 18

is selected by setting column switches 2 and 5 to *1*, and column switches 1, 3, and 4 to *0*. (18 = 0 + 2 + 0 + 0 + 16.)

### HP 70900B Local Oscillator Source Switches

The HP 70900B local oscillator source has the following switches in addition to the address switches.

The HP-IB switch disconnects or connects the module to HP-IB. The switch must be on for HP-IB control. When set to off, the address map displays "HP-IB NO."

The SWI/MEM (switch/memory) switch specifies how the HP-IB address is set. When set to SWI, the address can be changed with the address switch only. When set to MEM, the address can be selected with either the switch or the front panel keys. The MEM position is suggested.

The MAS/SLA (master/slave) switch is set to MAS during normal spectrum analyzer operation. The switch is set to SLA for special applications that require system reconfiguration.

The NRML/TEST (normal/test) switch should remain set to NRML. The TEST setting is for factory testing only. Setting the switch to TEST erases most of the spectrum analyzer memory and any conditions that may explain faulty operation for aid in troubleshooting. Setting NRML/TEST to TEST is *not* recommended.

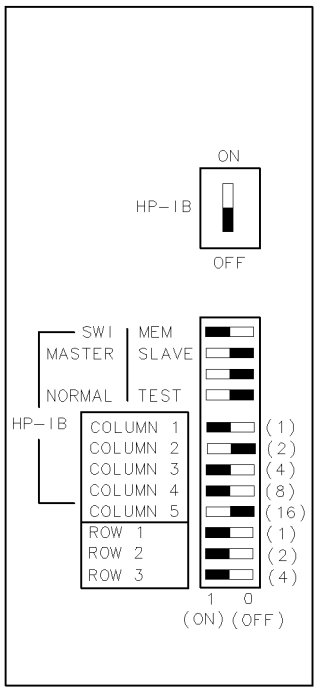


HP 70900B LOCAL OSCILLATOR

SWITCH SETTINGS SHOWN:
COLUMN ADDRESS 18 = 0 + 2 + 0 + 0 + 16
ROW ADDRESS 0 = 0 + 0 + 0
HP-IB=ON

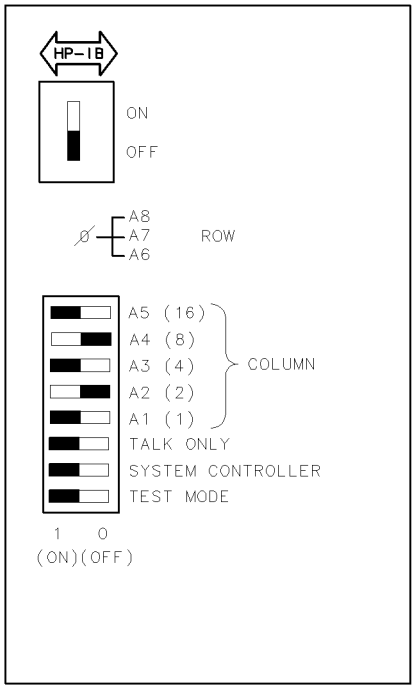


HP 70205A GRAPHICS DISPLAY

SWITCH SETTINGS SHOWN:
COLUMN ADDRESS 10 = 0 + 2 + 0 + 8 + 0
ROW ADDRESS = 0
HP-IB=ON

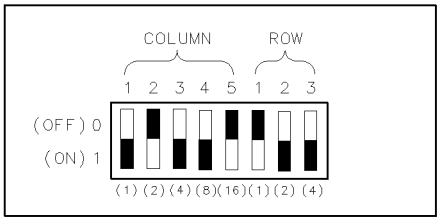


IF OR RF MODULES

SWITCH SETTINGS SHOWN:
COLUMN ADDRESS 18 = 0 + 2 + 0 + 0 + 16
ROW ADDRESS 1 = 1 + 0 + 0

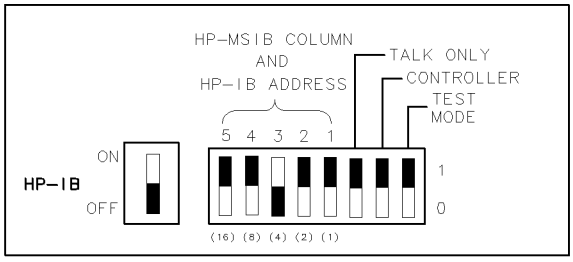


HP 70004A DISPLAY

**Figure 1-3. Address Switches on Local-Oscillator, IF-Section, and RF-Section Modules**

## Changing the HP-IB Address with Front-Panel Controls

The HP-IB address of the spectrum analyzer can be changed at the front panel when the local oscillator SWI/MEM switch is set to MEM. (In new spectrum spectrum analyzers, the switch is set to MEM at the factory.) Use this procedure to set the address:

1. Press (DISPLAY), `Address Map`.
2. With the front panel knob, position the box around the HP 70900B local oscillator source, then press `HP-IB ADDRSET`.
3. Enter the HP-IB address using the front panel numeric keypad, then press `ENTER`.

The current HP-IB address is shown inside the HP 70900B local oscillator source box on the address map (Figure 1-1). Changing the HP-IB address with the front panel controls does not affect the HP-MSIB address of the module.

## Memory Card

Memory cards are available for external memory when the spectrum analyzer is installed in the HP 70004A color display or connected to it via HP-MSIB. Insert the card with the arrow facing up into the slot. When correctly installed, a portion of the card (2 cm) is exposed. Improper insertion can produce error messages.

New memory cards need formatting. To format, execute `MSI MSIB` to select the HP 70004A color display (or any HP-MSIB device containing a card), then execute `FORMAT`. `FORMAT` erases the selected device, then initializes it.

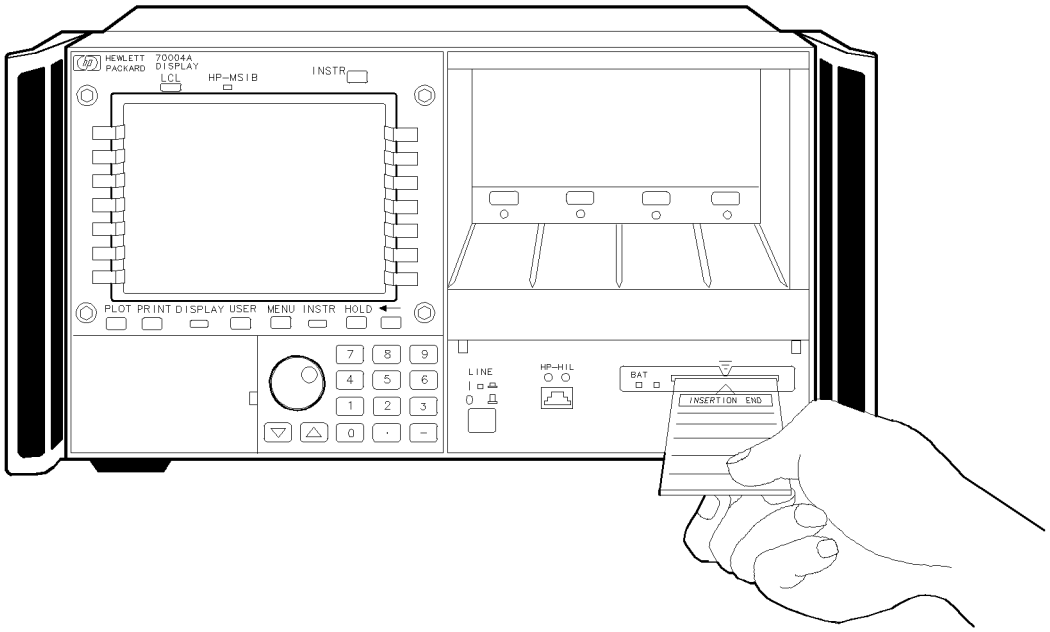


**Figure 1-4. Inserting the Memory Card**

The memory card requires power. The HP 70004A color display provides power to the card when it is installed. When the card is removed, power is supplied by a battery. *Items stored in the memory card remain as long as the card has sufficient power.*

Change the memory-card battery every two years. On new cards, the time of installation is engraved on the side of the card. The first digit describes the year. The next two characters tell the month, and the last digits tell the week. For example, 8OC3 indicates the battery was installed during the third week of October in 1988.

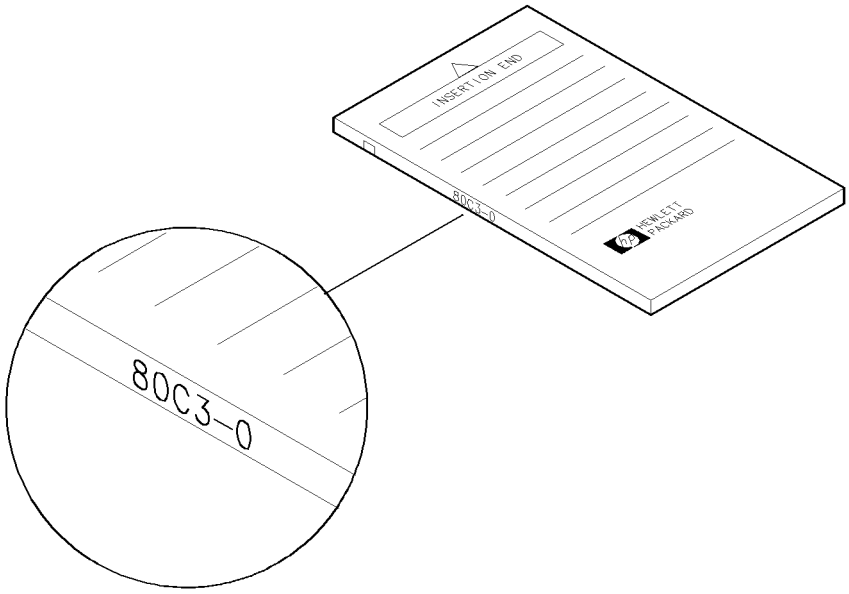


**Figure 1-5. Battery Installation Date Code**

To change the battery, follow this procedure:

**Caution** All data in the memory card is lost when the battery is removed while the card is *not* installed. When extra care is appropriate, use the STOR command to store memory-card files on another device before changing the battery.

1. Install the memory card into the HP 70004A color display.
2. Locate the groove of the battery clip at the front edge of the card.
3. Gently pry the battery clip out of the card. The battery fits inside the clip.
4. Replace the battery, making sure the plus (+) sign on the battery is on the same side as the plus sign on the clip.
5. Insert the battery clip into the memory card, holding the clip as oriented in the following figure. (Face the open edge of the clip toward the write-protect switch on the memory card.)
6. Write the date that the battery was replaced on the memory-card label, to remind you when the battery should be replaced.

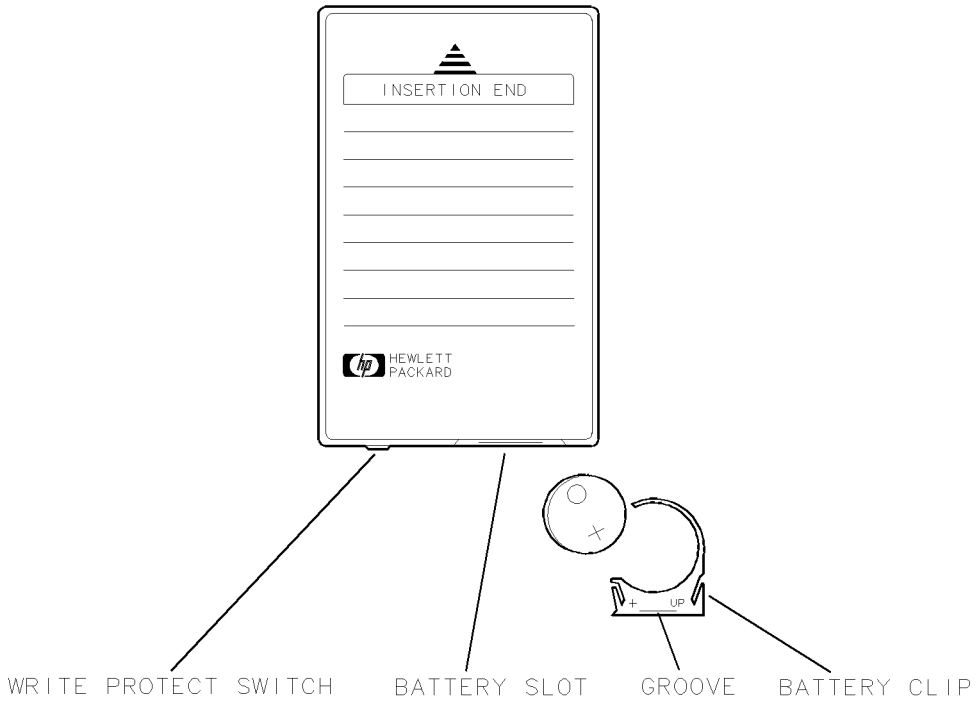


**Figure 1-6. Memory Card Battery Replacement**

## Communicating with the Spectrum Analyzer

Remote operation is similar to manual operation. In most cases, the two measurement procedures are identical except for timing considerations which become important during remote operation.

Measurement programs are composed with commands that correspond to front panel keys. Follow this procedure when writing programs.

1. Measure using the front panel keys, then note the order of the keystrokes.
2. Determine the commands that correspond to the keystrokes. Refer to the "Command Summary."
3. Incorporate the commands into output statements.

An output statement tells the computer to send a message to the spectrum analyzer. For example, executing this output statement sets the center frequency to 300 MHz:

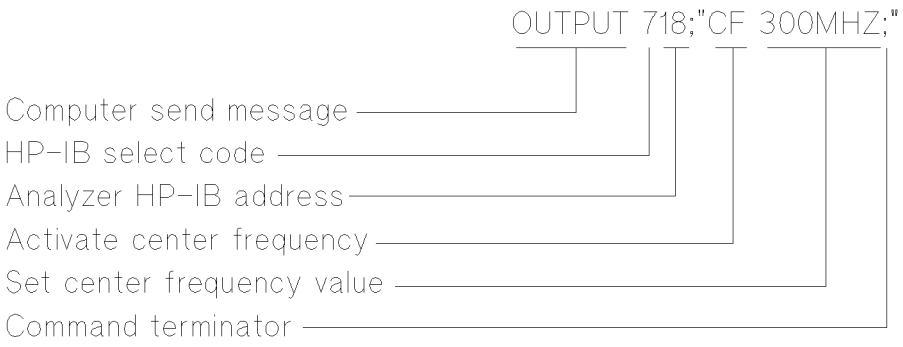


### Syntax Requirements

All spectrum analyzer commands must be constructed according to the syntactical rules outlined in the Language Reference chapter.

## Control of Instrument Settings

Most spectrum analyzer commands first activate a function, then enter a number followed by a units code and a command terminator:

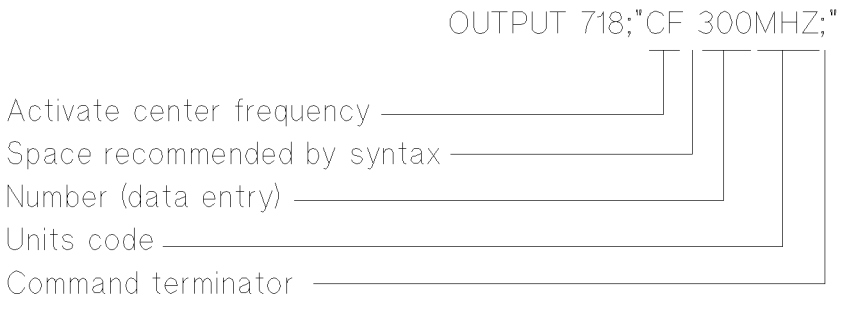


The number within the quote field must be a string of decimal numbers plus an optional decimal point and may be preceded by a minus or plus sign. Either fixed- or floating-point notation may be used. For example, “12.3E3”, “1.23E4”, and “12300” each enter the same number.

A units code follows a data entry. The preferred units codes shown in Table 1-1 should be used. For compatibility with programs written for other Hewlett-Packard spectrum analyzers, optional units codes are allowed. Optional unit codes are indicated by dashed lines in the syntax charts in the Language Reference chapter.

**Table 1-1. Preferred Units Codes**

| | Units | Code |
|---|---|---|
| **Frequency** | Hertz | HZ |
| | Kilohertz | KHZ |
| | Megahertz | MHZ |
| | Gigahertz | GHZ |
| **Time** | Second | S |
| | Millisecond | MS |
| | Microsecond | US |
| **Current** | Ampere | A |
| | Milliampere | MA |
| | Microampere | UA |
| **Impedance** | OHM | |
| **Ratio Measurements** | Decibel | DB |
| **Power** | Watt | W |
| | Milliwatt | MW |
| | Microwatt | UM |
| **Decibels relative to units.** | 1 Milliwatt (dBm) | DBM |
| | 1 Millivolt | DBMV |
| | 1 Microvolt (dB$\mu$V) | DBUV |
| **Voltage** | Volt | V |
| | Millivolt | MV |
| | Microvolt | UV |

The semicolon is the preferred command terminator. While most functions allow other command terminators, such as carriage-return, line-feed, space, or comma; use the semicolon whenever possible to ensure proper program control.

Spectrum analyzer commands may be used with computer variables. The following program line sets the spectrum analyzer center frequency to the value of a computer variable, Freq.

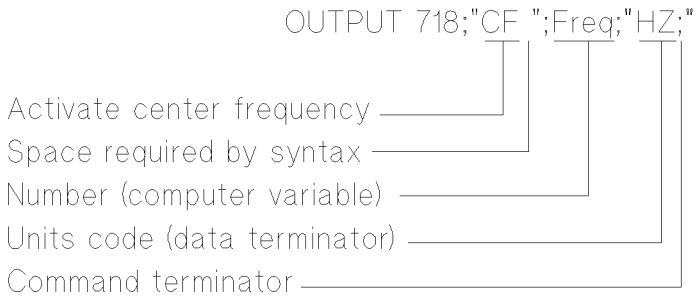


Data may also be entered from the front panel when the spectrum analyzer is under remote control by following the spectrum analyzer command with EP (enable parameter).

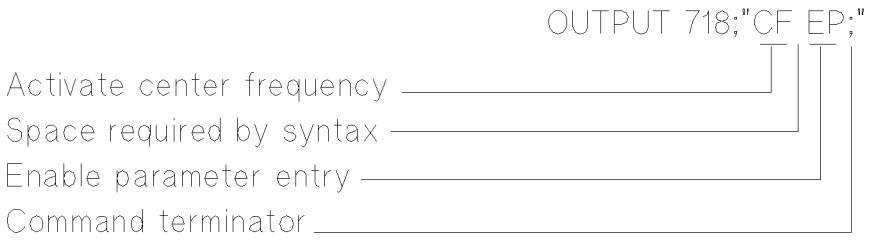


EP halts execution of spectrum analyzer commands so that values may be entered with the front panel numeric keypad, step keys, knob, and unit-code keys. Data may be entered from the front panel until the `ACCEPT VALUE` key is pressed. The syntax diagrams in the Language Reference chapter show which commands can be followed by EP.

## Local and Remote Control Indicators

Whenever the spectrum analyzer is addressed via HP-IB, the (MENU) and (USER) keys are disabled and the remote HP-IB indicator (RMT) on the local oscillator front panel lights.

The listen HP-IB indicator (LSN) lights when the spectrum analyzer receives information via HP-IB. The talk indicator (TLK) lights when the spectrum analyzer sends information via HP-IB. During the service-request mode, an event, such as the end of the sweep, can be monitored by defining the service-request mask. The service-request indicator (SRQ) lights when the event has occurred and the spectrum analyzer is requesting computer attention.

## Initial Program Considerations

Programs should begin with system-level and spectrum analyzer commands that form a good starting point for measurements.

All the examples in this manual use the HP BASIC programming language to control spectrum analyzer operation with an HP 9000 Series 200/300 controller. In addition, the examples assume the spectrum analyzer is on interface 7 at HP-IB address 18, and has a display, such as the HP 70004A color display, HP 70205A graphics display, or HP 70206A system graphics display.

### Initialize Spectrum-Analyzer State

The following example shows one way to initialize the spectrum analyzer.

EXAMPLE 1-1. Initialize spectrum analyzer.

```
10 CLEAR 718
20 OUTPUT 718;"IP;SNGLS;TS;"
30 OUTPUT 718;"CLRDSP;"
```

The CLEAR command is an HP BASIC command that resets a device on HP-IB to a known state. In the previous example, CLEAR 718 clears the device (the spectrum analyzer in this case) at address 18 on interface 7. CLEAR erases the spectrum analyzer input buffer, interrupts most incomplete operations, and prepares the spectrum analyzer to receive instructions.

The instrument-preset command, IP, sets all of the analog parameters of the spectrum analyzer to a known state and provides a good starting point for all measurement processes. Executing IP is the same as executing a number of spectrum analyzer commands. (See IP in the Language Reference chapter for a list of the commands executed by IP.)

The single-sweep and take-sweep commands, SNGLS and TS, control the sweep. Though it is not necessary to initialize the spectrum analyzer with SNGLS and TS, they do improve the reliability of programs, especially when changing the measurement range, performing trace math, or transferring trace data. (Refer to “Program Timing”).

The CLRDSP command clears the graphics from the display screen. Because CLRDSP also erases stored graphics from memory, such as an **item** or a **graphics window**, execute CLRDSP discriminately. The “Creating Graphics” section in this chapter gives more information about initializing the spectrum analyzer display for graphic presentations.

### Assign Input/Output Path

The following example assigns the spectrum analyzer to an input/output (I/O) path name, called @Sa.

EXAMPLE 1-2. Assign spectrum analyzer to I/O path.

```
10 ASSIGN @Sa TO 718
```

The ASSIGN command is an HP BASIC command that creates an I/O path name and assigns that name to an I/O resource. ASSIGN offers several advantages. When ASSIGN is included in a program, the spectrum analyzer HP-IB address can be changed easily and data can be transferred to a mass storage unit.

Some program examples in this manual have the spectrum analyzer assigned to an I/O path.

## Calibrate Spectrum Analyzer

The following example shows how to execute the error-correcting calibration routines which compensate for anomalies in the IF amplifiers, resolution bandwidth filters, attenuator, and other circuitry.

EXAMPLE 1-3. Calibrate spectrum analyzer after one-hour warm-up.

(Connect calibrator signal to spectrum analyzer input.)

```
10 ASSIGN @Sa TO 718        Initialize spectrum analyzer.
20 CLEAR @Sa
30 OUTPUT @Sa;"IP;"
40 OUTPUT @Sa;"CAL ALL;"    Calibrate spectrum analyzer.
```

Since the calibration routine lasts about three minutes, execute it only when the spectrum analyzer requires calibration:

- At the beginning of each day.
- After extreme temperature changes.
- After selecting a new input port.
- After moving the spectrum analyzer.

## Program Timing

Most remotely controlled measurements require control of the sweep. The TS (take sweep) command initiates a sweep when the trigger conditions are met. When TS is executed as part of a command sequence, the spectrum analyzer starts and completes one full sweep before the next spectrum analyzer command is executed.

Use the SNGLS (single sweep) command to maintain absolute control over the sweep and to reduce execution time. Once SNGLS activates the **single-sweep mode**, TS can be used to initiate a sweep only when necessary.

Since many remote commands process trace information, updating trace information with TS becomes important whenever the input signal or measurement range changes. Use TS to update the trace *after* the spectrum analyzer settings or input signals change, but *before* the trace information is returned to the computer or processed by other commands, like trace math or marker commands.

When developing measurement algorithms with the front panel controls, use the `SINGLE SWEEP` key to simulate the effect of the TS command updating the trace.

The following examples demonstrate the significance of updating trace information with the TS command.

EXAMPLE 1-4. Change measurement range but do not update trace information.

(Connect calibrator signal to spectrum analyzer input.)

```
10 CLEAR 718                          Initialize spectrum analyzer.
20 OUTPUT 718;"IP;SNGLS;TS;"
30 OUTPUT 718;"CF 300MHZ;SP 1MHZ;"    Change measurement range.
```

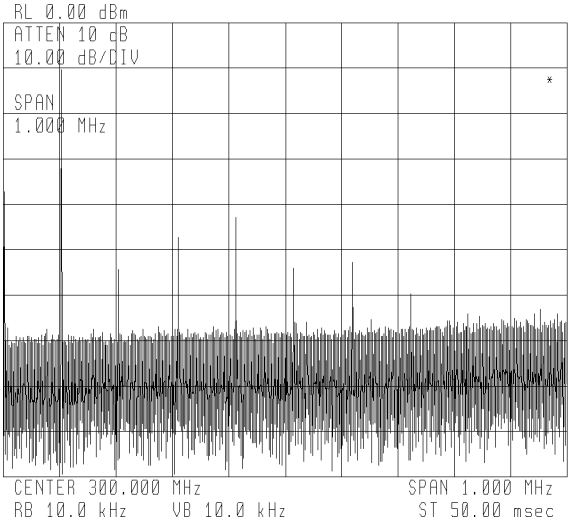


**Figure 1-7. Invalid Trace Information**

The previous program example does not measure with the new measurement range. To obtain valid trace information, the trace must be updated with the TS command. Here is the program again, corrected to include the TS command in line 40.

EXAMPLE 1-5. Change measurement range, then update trace information.

(Connect calibrator signal to spectrum analyzer.)

```
10 CLEAR 718                              Initialize spectrum analyzer.
20 OUTPUT 718;"IP;SNGLS;TS;"
30 OUTPUT 718;"SP 1MHZ;CF 300MHZ;"        Change measurement range.
40 OUTPUT 718;"TS;"                       Measure with trace A.
```

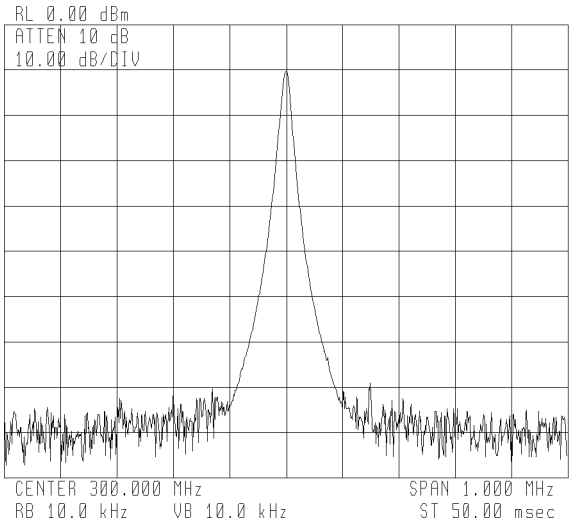


**Figure 1-8. Updated Trace Information**

The next example processes trace information with a marker command, `MKPK HI`, which selects the highest amplitude level in the trace. Since the program changes the measurement range, the trace information must be updated with TS before `MKPK HI` is executed.

EXAMPLE 1-6. Use TS to update trace information before using the marker commands.

(Connect calibrator signal to spectrum analyzer.)

```
10 CLEAR 718                                    Initialize spectrum analyzer.
20 OUTPUT 718;"IP;SNGLS;TS;"
30 OUTPUT 718;"SP 1MHZ;CF 300MHZ;RL -5DBM;"     Change measurement range.
40 OUTPUT 718;"TS;"                             Update trace.
50 OUTPUT 718;"MKPK HI;"                        place marker on highest signal level.
```

As the example shows, TS is executed *after* spectrum analyzer settings are changed, but *before* trace information is processed.

Note that SNGLS cannot be substituted successfully for TS in all spectrum analyzer programs. If SNGLS were substituted for TS in the previous program, SNGLS would initiate a sweep, but `MKPK HI` would be executed before the completion of the sweep.

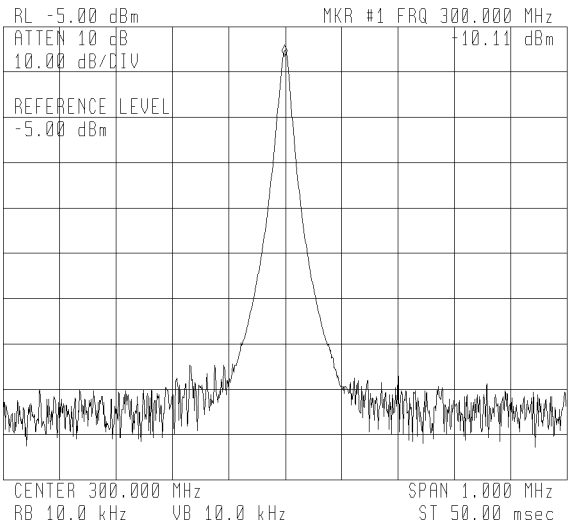


**Figure 1-9. Update Trace Information with TS Before Executing Marker Commands**

There are two commands that change the measurement range indirectly, MKCF and MKRL. They set the center frequency and reference level equal to the marker frequency and amplitude, respectively. If valid trace information is needed, a TS command must be executed after these commands are executed.

In all cases, executing TS invokes at least one entire sweep. However, TS invokes more than one sweep when certain commands are active, such as video averaging (VAVG) or marker tracking (MKTRACK).

## Additional Timing Commands

Program timing can also be controlled with the RQS, DONE, and WAIT commands. The RQS command interrupts the computer operation when the spectrum analyzer has attained a predefined state. The DONE command delays transmission of subsequent commands on HP-IB until "1" is returned to the computer. The WAIT command suspends program operation for a specified time.

TS, RQS, and DONE are used often to synchronize data acquisition or the spectrum analyzer state with other events. The WAIT command, on the other hand, is used to improve human interface with the program. The program examples in this manual use WAIT to control the duration of displayed messages, or use WAIT to delay program execution to give you time to observe events on the display.

## Data Transfer to Controller

The spectrum analyzer returns information as decimal values in parameter units shown in Table 1-2. Active units are determined by the settings of the reference level (RL) for some functions, such as the marker, the scale (LN, LG), or the amplitude units (MKREAD, AUNITS).

**Table 1-2. Parameter Units**

| Measured Data | Fundamental Unit |
|---|---|
| Frequency | Hertz |
| Power | dBm |
| Ratio | dB |
| Voltage | Volt |
| Time | Second |
| Current | Ampere |
| Impedance | Ohm |

Trace information that has been manipulated with math and move commands, or has been formatted with the MDS (measurement data size) or TDF (trace data format) command may be returned in other units. Optional data formats are discussed in the following text. The math and move commands are discussed in the next section of text, "Trace Math, Variables, and Trace Arrays."

### Returning Trace Data

Data transfer varies in simplicity, but in all cases is initiated with an spectrum analyzer **query**. An **enter statement** in conjunction with an spectrum analyzer query returns information to the computer.

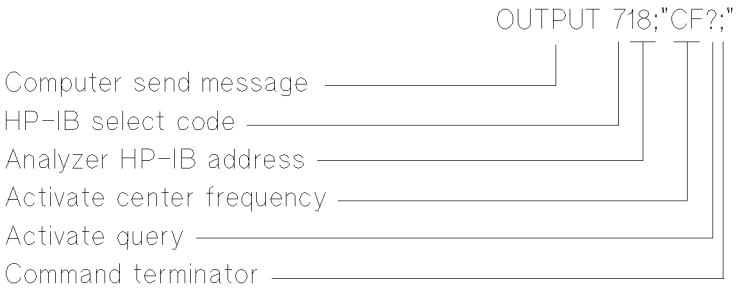

In the following diagram, the center-frequency value is returned to the computer. Use the enter statement to assign the returned value to a variable in the computer:

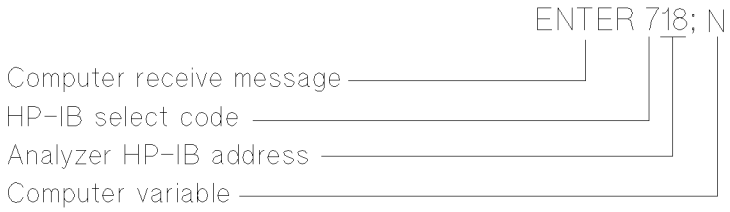


Values of other spectrum analyzer settings, such as span, attenuation, and resolution bandwidth, are transferred similarly to the computer. Form a query by adding a question mark (?) at the end of a spectrum analyzer command. The syntax charts in the Language Reference chapter show which commands can be queries. Queries do not decouple spectrum analyzer functions that are already coupled, such as resolution bandwidth and sweep-time settings.

Trace information is returned two different ways, either indirectly with the use of markers, or directly as trace data with the TRA, TRB, or TRC commands. The next example marks trace A with a marker and returns the frequency and amplitude values at the marker. Note that for every query executed, a value must be stored in the computer.

EXAMPLE 1-7. Return marker frequency and amplitude to computer. (Values returned are 300 and −10.)

(Connect calibrator signal to spectrum analyzer input.)

```
10 CLEAR 718                                  Initialize spectrum analyzer.
20 OUTPUT 718;"IP;SNGLS;TS;"
30 OUTPUT 718;"SP 1MHZ;CF 300MHZ;RL -5DBM;"   Set measurement range.
40 OUTPUT 718;"TS;"                           Sweep trace A.
50 OUTPUT 718;"MKPK HI;"                      Mark highest signal level.
60 OUTPUT 718;"MKF?;"                         Return frequency at marker.
70 ENTER 718;F                                Assign frequency to computer vari-
                                              able.
80 OUTPUT 718;"MKA?;"                         Return amplitude at marker.
90 ENTER 718;A                                Assign amplitude to computer variable.
100 F=F/1.E+6                                 Convert frequency from Hz to MHz.
110 PRINT F,A                                 print values.
```

The next two examples use the TRA command to return the trace amplitude information.

EXAMPLE 1-8. Return amplitude of the 400th element of trace A.

(Connect calibrator signal to spectrum analyzer input.

```
10 CLEAR 718                                    Initialize spectrum analyzer.
20 OUTPUT 718;"IP;SNGLS;TS;"
30 OUTPUT 718;"CF 305MHZ;SP 100MHZ;RL -5DBM;"   Set measurement range.
40 OUTPUT 718;"TS;"                             Measure.
50 OUTPUT 718;"TRA[400]?;"                      Return amplitude of 400th element
                                                of trace A.
60 ENTER 718;N                                  Assign amplitude to computer variable.
70 PRINT N                                      print value.
```

EXAMPLE 1-9. Return amplitude of all elements in trace A.

(Connect calibrator signal to spectrum analyzer input.)

```
10 DIM Array (1:800)                            Declare computer array for storage
                                                of 800 values.
20 CLEAR 718
30 OUTPUT 718;"IP;SNGLS;TS;"
40 OUTPUT 718;"SP 100MHZ;CF 305MHZ;RL -5DBM;"   Set measurement range.
50 OUTPUT 718;"TS;"                             Measure.
60 OUTPUT 718;"TRA?;                            Return amplitude of points in trace
                                                A.
70 ENTER 718;Array(*)                           Store trace amplitude values in a
                                                computer array.
```

The FETCH command returns the trace data for the currently active trace. Data is returned in binary while the sweep progresses. Use FETCH to speed data transfer and processing.

## Formatting Trace-Data Output to the Controller

The trace-data format (TDF) command controls the format of trace-amplitude data at the spectrum analyzer HP-IB output. All the format modes return amplitude information in measurement units except for `TDF P`, which returns parameter units.

The output formats are summarized in Table 1-3 and are described in the following text. (Parenthetical numbers in the table are decimal values representing binary, 8-bit numbers.)

**Table 1-3. Trace Data Output Formats for Amplitude Information**

| Format Command | Spectrum Analyzer Output | Trace Element Output Amplitude of 10 dBm |
|---|---|---|
| `TDF P` | Returns ASCII decimal value. Values are in parameter units. Data output is followed by line feed (ASCII code 10) and end-or-identify (EOI) | +10.00 |
| `TDF M` | Returns ASCII integer value. Values are in measurement units. Line feed (ASCII code 10) and EOI follow data output. | +1000 |
| `TDF B` | Returns binary value as two 8-bit bytes, with most significant byte first. Values are in measurement units. Sends EOI with last byte. | (3) (232) |
| `TDF A` | Sends series of 8-bit bytes (A-block data field). Data is preceded by "#" and "A" and two bytes representing length of data field. Values are in measurement units. | (#)(A) (0)(2) (3)(232) |
| `TDF I` | Sends a series of 8-bit bytes (I-block data field). Data is preceded by "#" and "I". Values are in measurement units. Sends EOI with last byte. | (#)(I) (3) (232) |

### TDF P: Return Decimal Numbers in Parameter Units

`TDF P` formats data as ASCII, decimal values in parameter units. Instrument preset (IP) activates the `TDF P` format, and the AUNITS (amplitude units) command specifies the kind of parameter units. The default units are volts for linear trace information and dBm for logarithmic trace information.

A line feed (ASCII code 10) follows data output. The end-or-identify state (EOI) is sent with line feed.

The `TDF P` format is convenient because it returns parameter-unit values, but it is the slowest of the data-format modes.

### TDF M: Return Decimal Numbers in Measurement Units

`TDF M` formats data as ASCII, integer values in measurement units. (Thus, the AUNITS command has no affect on returned data.) A line feed (ASCII code 10) follows data output. The end-or-identify state (EOI) is sent with line feed.

The `TDF M` format is faster than the `TDF P` format, but requires conversion to parameter units.

### TDF B: Return Binary Numbers in Measurement Units

TDF B formats data in measurement units as binary numbers. Numbers are transmitted usually as words. (A word is two 8-bit bytes.) The most significant byte is sent first, followed by the least significant byte. EOI is sent with the last byte.

| Most Significant Byte | Least Significant Byte |
|---|---|
| XXXXXXXX | XXXXXXXX |

For speed at the cost of accuracy, the measurement-data-size command (MDS) may be used to consolidate the information contained in a word into one byte (MDS B). However, since trace math operations often produce numbers too large to be contained in one byte, the use of bytes instead of words as the data size is not recommended, especially during trace-math operations. Instrument preset (IP) selects words as the default data size.

### TDF A and TDF I: Return Block-Data Fields in Measurement Units

TDF A and TDF I format data into absolute and indefinite block-data fields. Both formats return the same kind of data, binary words (MDS W) or bytes (MDS B) as a block of data. However, the formats differ in the way they indicate the number of bytes or words returned. The TDF A format precedes the data with # A and two bytes that specify the number of data bytes returned. On the other hand, the TDF I format precedes the data with "# I" and sends EOI (end or identify) with the last byte of data.

The block-data formats are available for compliance with IEEE standards. They have the same limitations as the binary format, TDF B, when bytes are chosen as the measurement data size.

## Transmission Sequence of Data on the HP-IB

Table 1-4 shows an HP-IB transmission sequence for each format. Each one transmits the 10 dBm amplitude level of a trace element. Remember that even though the spectrum analyzer transmits binary or ASCII-decimal information on HP-IB, a decimal number is always returned to the HP 9000 Series 200/300 controller. The parenthetical numbers in the table are decimal values representing binary, 8-bit numbers.

**Table 1-4.**
**HP-IB Transmission Sequence for Different Trace-Data Formats (TDF)**

| | TDF P | TDF M | TDF B | TDF A | TDF I |
|---|---|---|---|---|---|
| **Byte 1** | 1 | 1 | (3) | # | # |
| **Byte 2** | 0 | 0 | (232-EOI) | A | I |
| **Byte 3** | . | 0 | | (0) | (3) |
| **Byte 4** | 0 | 0 | | (2) | (232-EOI) |
| **Byte 5** | 0 | 10 (EOI) | | (3) | |
| **Byte 6** | 10(EOI) | | | (232) | |
| | | | | (10-EOI) | |

## Formatting the Computer

The format of the computer must be compatible with the output format of the spectrum analyzer. The following table and programming examples illustrate this concept.

**Table 1-5. Computer Formats**

| Analyzer Format | Computer-Format Requirements | Example in HP BASIC |
|---|---|---|
| TDF M | Free field | 10 ENTER 718;Amplitude |
| TDF P | Free field | 10 ENTER 718;Amplitude |
| TDF B | Binary. Read twice for each value if data size is words. (See MDS.) | 10 ASSIGN @Sa TO 718;FORMAT OFF<br>20 ENTER @Sa USING "#,W";Z(*) |
| TDF A | Initially read four values (for #, A, and length) in any format. Use integer format for data that follows. | 10 ASSIGN @Sa TO 718;FORMAT OFF<br>20 ENTER @Sa;Pounda,Num_bytes<br>30 ALLOCATE INTEGER Z(1:Num_bytes/2)<br>40 ENTER @Sa;Z(*) |
| TDF I | Initially read two values (for #, I) in any format. Use integer format for data that follows. | 10 ASSIGN @Sa TO 718;FORMAT OFF<br>20 ENTER @Sa;Poundi<br>30 ENTER @Sa USING "#,W";Z(*) |

## Trace-Data Format Examples

The following examples illustrate the four ways trace data can be formatted for return to the computer. The last example also shows how to send the trace data from the computer back to the spectrum analyzer.

EXAMPLE 1-10. Return trace data as decimal numbers in parameter units (TDF P).

```
10 OUTPUT 718;"TDF P;"        Return amplitude of trace element in parameter units.
20 OUTPUT 718;"TRA[10]?;"
30 ENTER 718;N                Assign value of (–10.33) to N.
```

EXAMPLE 1-11. Return trace data as integers in measurement units (TDF M).

```
10 OUTPUT 718;"TDF M;"        Activate measurement-unit format.
20 OUTPUT 718;"TRA[10]?;"     Return amplitude of trace element in measurement units.
30 ENTER 718;N                Assign value (–1033) to N.
```

EXAMPLE 1-12. Return trace data as binary numbers with data size of one word (TDF B).

```
10 INTEGER Z(1:800)                      Declare integer array.
20 ASSIGN @Sa TO 718
30 ASSIGN @Sa_fast TO 718;FORMAT OFF     Assign fast I/O path to 718.
40 OUTPUT @Sa;"MDS W;"                   Define data size as one word.
50 OUTPUT @Sa;"TDF B;"                   Activate binary data format.
60 OUTPUT @Sa;"TRA?;"                    Return amplitude of all trace elements in
                                         measurement units.
70 ENTER @Sa_fast USING "#,W";Z(*)       Load binary values into array Z. "#" specifies
                                         that line execution is terminated when last
                                         ENTER item is terminated. "W" specifies that
                                         items loaded are words (two bytes).
```

EXAMPLE 1-13. Return trace data in block-data format with data size of one word (TDF A), then send data back to spectrum spectrum analyzer.

```
1 OUTPUT 718;"SNGLS;SP 1MHZ;CF 300MHZ;"  Activate single-sweep mode. Set measure-
                                         ment range.
5 OUTPUT 718;"TS;"                       Sweep trace A.
10 INTEGER Pounda,Num_bytes              Declare integer array.
20 ASSIGN @Sa TO 718
30 ASSIGN @Sa_fast TO 718;FORMAT OFF     Assign fast I/O path to 718.
40 OUTPUT @Sa;"MDS W;"                   Define data size as one word.
50 OUTPUT @Sa;"TDF A;"                   Activate absolute block-data format.
60 OUTPUT @Sa;"TRA?;"                    Return amplitude of all trace elements.
70 ENTER @Sa_fast;Pounda,Num_bytes       Assign #A to Pounda.  Assign length,
                                         that is, the number of bytes returned
                                         to computer, to Num_bytes. (Temporary
                                         variables.)
80 ALLOCATE INTEGER A(1:Num_bytes/2)     Declare array with length of Num_bytes/2.
90 ENTER @Sa_fast; A(*)                  Store contents of trace A in an integer
                                         array.
100 OUTPUT @Sa;"TRDSP TRA,OFF;"          Stop display of trace A.
110 OUTPUT @Sa;"TRC";                    This line and the next line store the
                                         contents of the integer array in trace
                                         C. The semicolon is required to suppress
                                         carriage-return/line-feed so that the TRC-
                                         command statement is not terminated
                                         prematurely.
120 OUTPUT @Sa_fast;Pounda;Num_bytes;A(*) Send #A and length to spectrum analyzer,
                                         followed by contents of integer array.
                                         As required by the TRC-command syn-
                                         tax, the @Sa_fast format removes com-
                                         mas that separate the numbers inside the
                                         integer array.
130 OUTPUT 718;"VIEW TRC;"               View trace C.
```

# Math Functions, Variables, and Trace Arrays

The spectrum analyzer processes and stores measurement results that can be displayed or manipulated arithmetically. The spectrum analyzer contains memory where user-defined traces and variables may be stored for future calculations or for display.

This section describes the internal processing of traces and variables and tells how to manipulate data correctly with the math commands.

## Units

Measurement results are referenced on the display graticule according to frequency, time, and amplitude. The terms that describe measurement results are **parameter units** and **measurement units**.

### Parameter Units

A parameter unit is a standard scientific unit. In its preset state, the spectrum analyzer returns all measurement results in parameter units. Parameter units for amplitude are as follows:

**Table 1-6. Parameter Units for Amplitude**

| Decibels | Watts | Volts |
|---|---|---|
| dB | W | V |
| dBm | mW | mV |
| dBmV | $\mu$W | $\mu$V |
| dB$\mu$V | | |

Use the AUNITS command to change the active amplitude units. Other parameter units are seconds, hertz, amperes, and ohms.

### Measurement Units

Measurement units apply only to entire traces and trace elements. All trace information is stored internally in measurement units. For logarithmic trace information, a measurement unit is one hundredth of a dBm:

$$[\text{value in dBm}] \times 100 = \text{measurement units}$$

Thus, a $-10$ dBm value is equal to $-1000$ measurement units:

$$-10 \text{ dBm} \times 100 = -1000 \text{ measurement units}$$

For linear trace information, measurement units are defined as 0 (zero) for the bottom of the display, and 10,000 for the top (reference level). The measurement-unit range is restricted to integers between +32,767 and −32,768. Since measurement units are restricted to integers, −10.115 dBm equals −1012 measurement units, *not* −1011.5 measurement units because decimal values are rounded to the nearest integer.

$$-10.115 \text{ dBm} \times 100 = -1012 \text{ measurement units (rounded to nearest integer)}$$

The AMPU command converts measurement-unit values to parameter-unit values. The MEASU command converts parameter-unit values to measurement-unit values. These commands are discussed later in this section.

### Position Units and Trace Elements

The terms that describe trace composition are defined as follows:

**element**. A point that represents a fixed location on the horizontal axis of a trace. Each point contains amplitude information. The TRDEF command specifies how many points a trace contains. However, instrument preset (IP) or trace preset (TRPST) gives traces A, B, and C 800 points each.

**position units**. Position units describe the position of a point along the horizontal axis of a trace. The point at the left end of the trace has a position-unit value of 1. The point at the right end of an 800-point trace has a position-unit value of 800.

The POSU command converts the frequency of a point on a trace to position units. The FREQU command converts a point on a trace indicated in position units to hertz, or in zero-span mode, to units of time.

## Variables and Traces

The spectrum analyzer processes all information as variables and trace arrays. For example, the spectrum analyzer reserves an area in memory for trace A information. Whenever trace A is swept, the spectrum analyzer updates the array with new data. The spectrum analyzer also has space in memory for variables. Whenever a marker is placed on a trace, the spectrum analyzer assigns the amplitude value to the variable, MKA.

The spectrum analyzer processes two kinds of variables and traces, predefined and user defined. Predefined variables and traces, like MKA and trace A, exist permanently in **reserved memory** and their preset values are invoked after instrument preset (IP). User-defined variables and trace arrays are created by the user, are given preset values, and are stored in a special storage area, called **internal memory**. User-defined variables and trace arrays remain in internal memory, even when power is turned off, unless they are removed with the DISPOSE, PERASE, or ERASE command.

## Variables

Predefined variables have values that change depending on the current instrument settings. Each variable resides in reserved memory and represents the value of the programming command that has the same name as the variable. Table 2-2 lists the predefined variables.

The VARDEF command creates user-defined variables and stores them in **internal memory**. User-defined variables are from 1 to 12 characters long and are assigned values immediately after VARDEF is executed. The programs below define a spectrum analyzer variable called FREQUENCY.

EXAMPLE 1-14. Create a user-defined variable.

```
10 OUTPUT 718;"VARDEF FREQUENCY,0;"
```

EXAMPLE 1-15. Erase a user-defined variable.

```
20 OUTPUT 718;"DISPOSE FREQUENCY;"
```

Use PURGE or DISPOSE to erase user-defined variables from internal memory. Do not use reserved words for user-defined variable names. This interrupts the defining process and executes the invoked function instead. For example, removing "ENCY" from "FREQUENCY" in the previous example invokes the FREQU function. Table 2-4 in the Language Reference chapter lists reserved words that always exist in the spectrum analyzer. In addition, any names created by TRDEF, FUNCDEF, ACTDEF or other VARDEF commands become reserved words until they are erased from internal memory.

## Traces

Trace arrays comprise a series of data points that contain amplitude information. Three separate traces may be swept: trace A, B, or C. These are the predefined traces that exist permanently in reserved memory. Traces A, B, and C each have preset lengths of 800 position units. Use the TRDEF command to change the length of any trace from 3 to a maximum of 1024 position units. Use the IP or TRPST (trace preset) command to reset the lengths to their preset values.

The following example defines the length of trace C as 1000 position units.

EXAMPLE 1-16. Change trace length.

```
10 OUTPUT 718;"TRDEF TRC,1000;"
```

The TRDEF command also allocates space in **internal memory** for user-defined traces. Like traces A, B, and C, user-defined traces can be 3 to 1024 data points. Unlike traces A, B, and C, they cannot be swept. User-defined trace labels are 1 to 12 characters long. In the example below, measurement results are transferred to a user-defined trace array called TRACE_Z.

EXAMPLE 1-17. Store trace A in a user-defined trace.

```
10 CLEAR 718                          Initialize spectrum analyzer.
20 OUTPUT 718;"IP;"
30 OUTPUT 718;"SNGLS;TS;"             Activate single-sweep mode and sweep once.
40 OUTPUT 718;"TRDEF TRACE_Z,800;"    Create user-defined trace array.
50 OUTPUT 718;"MOV TRACE_Z,TRA;"      Move copy of trace A contents into TRACE_Z.
```

Use PURGE or DISPOSE to erase a user-defined trace from internal memory.

EXAMPLE 1-18. Erase user-defined trace.

```
10 OUTPUT 718;"DISPOSE TRACE_Z;"
```

Do not use reserved words as trace labels. This interrupts the trace-defining process and executes the invoked function instead. For example, substituting the label TEST for TRACE_Z in the previous example invokes the test function. Table 2-4 in the Language Reference chapter lists the reserved words that exist permanently in the spectrum analyzer. In addition, any names created by the VARDEF, FUNCDEF, ACTDEF, or other TRDEF commands become reserved words until they are erased from internal memory.

## Catalog of Internal Memory

The storage of user-defined variables and traces can be verified by viewing the catalog of internal memory. To view the catalog, press

(MENU)

Misc

catalog & MSI

INTERNL MEMORY

For each stored article, the catalog gives the name of the article, followed by VAR for user-defined variables or TRACE for user-defined traces, and the size of the article in bytes. (See "Memory".)

## Math and Move Commands

Math and move commands are data-manipulating functions that modify data and store results in memory. Each of these functions modify a value, called the **source**. The results of the modification are stored in an area of memory called the **destination**. Variables, traces, real numbers, or commands listed in Table 1-8 can be a source. (See "Using Predefined Functions as Sources" in the following text.) Only variables or traces can form a destination.

The math and move commands are listed in Table 2-1 and operate on a source on a point-by-point basis. Below, the MOV command transfers a value from the source to the destination.

EXAMPLE 1-19. Store center frequency in a user-defined variable.

```
10 CLEAR 718                          Initialize spectrum analyzer.
20 OUTPUT 718;"IP;"
30 OUTPUT 718;"SNGLS;TS;"             Activate single-sweep mode and sweep.
40 OUTPUT 718;"VARDEF FREQUENCY,0;"   Declare user-defined variable.
50 OUTPUT 718;"CF 300MHZ;"            Set center frequency value.
60 OUTPUT 718;"MOV FREQUENCY,CF;"     Copy center frequency value into FREQUENCY.
```

The next example demonstrates a math command, MPY (multiply). In the example, one of the sources and the destination are formed by the predefined variable for center frequency, CF. The other source is a real number (1.1).

EXAMPLE 1-20. Use the multiply command to increase the center frequency by 10 percent.

(Connect calibration signal to spectrum analyzer input.)

```
10 CLEAR 718                          Initialize spectrum analyzer.
20 OUTPUT 718;"IP;"
30 OUTPUT 718;"SNGLS;TS;"             Activate single-sweep mode and sweep.
40 OUTPUT 718;"CF 300MHZ;SP 1MHZ;"    Set measurement range.
50 OUTPUT 718;"TS;"                   Sweep trace A.
60 OUTPUT 718;"MPY CF,CF,1.1;"        Increase center frequency by 10%.
70 OUTPUT 718;"WAIT 5;"               pause program for viewing display.
80 OUTPUT 718;"IP;"                   preset spectrum analyzer settings.
```

Many math applications require user-defined variables and traces for temporary storage of intermediate results. This leaves the predefined variables and traces available for active measurement results. For example, in the previous example, math results are stored in CF. However, since CF always contains the center-frequency value, CF is updated whenever the center frequency changes. Thus, the math results of the previous example are lost when the measurement range is changed by the IP command in the last program line. The example below avoids this problem by storing results in a user-defined variable.

EXAMPLE 1-21. Store math results in a user-defined variable.

```
10 OUTPUT 718;"VARDEF VAR,0;"       Declare user-defined variable called VAR.
20 OUTPUT 718;"MPY VAR,CF,1.1;"     Multiply 1.1 and CF, then store result in VAR.
30 OUTPUT 718;"VAR?;"               Return value of VAR to computer.
40 ENTER 718;Value                  Assign value to computer variable.
```

### Four Rules for Trace Math

Be careful when using the math and move commands with trace arrays and elements. Otherwise, these data manipulating commands can yield inaccurate results. Follow these four rules to obtain accurate results.

- To avoid truncation of data, be sure the destination length is equal to or greater than the source length.
- Remember that the spectrum analyzer truncates numbers greater than +32,767 and less than −32,768 when operating with trace elements.
- When the source is a variable or real number and the destination is a trace array or element, use the MEASU command to preserve decimal values and yield parameter units.
- To achieve the best accuracy, use a single point for the destination, such as a trace element or variable.

Let us consider the rules one at a time.

**To Avoid Truncation of Data.** To avoid truncation of data, be sure the destination length is equal to or greater than the source length.

The first rule tells us some care must be taken to avoid inadvertent shortening of trace arrays. For example, when an active trace is operated on and stored in a trace of lesser length (that is, of fewer points), or in a variable, the portion of the trace not stored is lost when it is updated with new sweep information. The example below shows how trace information may be lost when moving a trace array into a shorter trace array. Since the user- defined trace array, TRACE, is shorter than trace A, amplitude information contained in the last 400 data points is lost when trace A is updated.

EXAMPLE 1-22. Move an active trace into a smaller trace array.

(Connect calibration signal to spectrum analyzer input.)

```
10 CLEAR 718                        Initialize spectrum analyzer.
20 OUTPUT 718;"IP;"
30 OUTPUT 718;"SNGLS;TS;"           Activate single-sweep mode and sweep.
40 OUTPUT 718;"TRDEF TRACE,400;"    Define user-defined trace with 400 elements.
50 OUTPUT 718;"MOV TRACE,TRA;"      Copy amplitude information of trace A into TRACE.
60 OUTPUT 718;"TS;"                 Update trace A with new sweep information.
```

When a short trace or variable is operated on and stored in a trace of longer length, the last trace element is extended for operations with the longer length.

**The Spectrum Analyzer Truncates Numbers.** Remember that the spectrum analyzer truncates numbers greater than +32,767 and less than −32,768 when operating with trace elements.

Math operations are restricted to the legal range of measurement units when trace arrays or elements form the destination or source. The two following examples truncate numbers exceeding the legal range. They move the number 32,767—*not*—into the 100th element of trace A.

EXAMPLE 1-23. Unwanted truncation of numbers when using the MOV command.

```
10 OUTPUT 718;"MOV TRA[100],100000;"
```
*Moves 32,767, not 100,000, into trace element.*

EXAMPLE 1-24. Unwanted truncation of multiplication results.

```
10 OUTPUT 718;"MPY TRA[100],1000,1000;"
```
*Multiplies 1000 times 1000, then stores truncated value (32,767) in trace element.*

**When the Source is a Real Number or Variable and the Destination is a Trace Array or Element, Use the MEASU Command to Preserve Decimal Values and Yield Parameter Units.** All trace amplitude information is stored internally and manipulated in measurement units. This means a −10 dBm reference-level value is converted to −1000 measurement units before transfer to a trace element. (Recall that a measurement unit is one hundredth of a decibel.) *This process is invisible, except when executing math or move functions when the source consists of a variable or real number and the destination consists of a trace array or element.* In this case, the source and destination express numbers in different units, making a conversion necessary. If the conversion is omitted, returned data is inaccurate by a factor of 100 and significant digits may be lost.

Examples 1-25, 1-26, and 1-27 demonstrate how misleading results are obtained if the conversion is neglected. They emphasize that the spectrum analyzer transfers only integer values to a trace element. Subsequent examples show how to transfer correct values.

EXAMPLE 1-25. Rounding of decimal values to integers.

```
10 OUTPUT 718;"MOV TRA[100],-10.33;"
```
*Moves −10, not −10.33, to trace elements.*

EXAMPLE 1-26. Unwanted rounding of decimal values to integers.

```
10 OUTPUT 718;"MOV TRA[100],MKA;"
```
*Moves −10 into trace element because MKA (marker amplitude) equals −10.33.*

Example 1-27 places a marker at the peak of the calibration signal, which is assumed to be −10 dBm. However, the −10 dBm value becomes −10 measurement units when it is transferred to a trace element with the MOV command. If the amplitude of the element was returned to the computer, the returned value would be −0.1 dBm, instead of the correct value, −10 dBm.

EXAMPLE 1-27. Return false trace-amplitude level because conversion is omitted.

(Connect calibration signal to spectrum analyzer input.)

```
10 CLEAR 718                              Initialize spectrum analyzer.
20 OUTPUT 718;"IP;"
30 OUTPUT 718;"SNGLS;TS;";                Activate single-sweep mode, then sweep.
40 OUTPUT 718;"FA 50MHZ;FB 1050MHZ;"      Set measurement range.
50 OUTPUT 718;"TS;"                       Sweep with new measurement range.
60 OUTPUT 718;"MKPK HI;"                  place marker at highest signal level.
70 OUTPUT 718;"MOV TRB[100],MKA;"         Copy integer value of marker (-10) into trace
                                          B element. TRB[100] now contains -10 mea-
                                          surement units.
80 OUTPUT 718;"TRB[100]?;"                Return -0.1 dBm (false value).
```

In Example 1-28, the MEASU command preserves decimal values and returns trace amplitude values in parameter units. Note that the conversion in line 70 preserves the decimal values of the marker amplitude.

EXAMPLE 1-28. Return correct trace amplitude using the MEASU command.

(Connect calibration signal to spectrum analyzer input.)

```
10 CLEAR 718                              Initialize spectrum analyzer.
20 OUTPUT 718;"IP;"
30 OUTPUT 718;"SNGLS;TS;"                 Activate single-sweep mode, then sweep.
40 OUTPUT 718;"FA 50MHZ;FB 1050MHZ;"      Set measurement range.
50 OUTPUT 718;"TS;"                       Sweep with new measurement range.
60 OUTPUT 718;"MKPK HI;"                  place marker at highest signal level.
70 OUTPUT 718;"MOV TRB[100],MEASU MKA;"   Convert marker amplitude (-10.33) to mea-
                                          surement units, then move value (-1033)
                                          into trace element. TRB[100] now contains
                                          -1033 measurement units.
80 OUTPUT 718;"TRB[100]?;"                Return -10.33 (correct value).
```

Example 1-29 uses the MEASU command to return correct math results. In line 70 below, MEASU converts 10 dB to 1000 measurement units. The program raises the level of trace A by 10 dB.

EXAMPLE 1-29. Add 10 dB to trace A.

```
10 CLEAR 718                              Initialize spectrum analyzer.
20 OUTPUT 718;"IP;"
30 OUTPUT 718;"SNGLS;TS;"                 Activate single-sweep mode and sweep.
40 OUTPUT 718;"FA 50MHZ;FB 1050MHZ;"      Set measurement range.
50 OUTPUT 718;"TS;"                       Sweep measurement range.
60 OUTPUT 718;"WAIT 5;"                   pause program to view display.
70 OUTPUT 718;"ADD TRA,TRA,MEASU 10;"     Add 10 dB to trace A.
80 OUTPUT 718;"VIEW TRA;"                 View trace A.
```

Table 1-7 is a list of the math and move commands that may require the use of the MEASU command.

**Table 1-7.**
**Math and Move Commands that Require Conversion with the MEASU Command**

| Command | Definition |
|---|---|
| ABS | Compute absolute value. |
| ADD | Add sources, point by point. |
| AVG | Average source with destination, point by point. |
| BIT | Store or return value of bit. |
| CONCAT | Concatenate traces. |
| DIV | Divide sources, point by point, then discard remainder. |
| EXP | Divide source by scaling factor and raise to power of 10. |
| INT | Compute integer value. |
| LOG | Compute logarithm. |
| MEAN | Compute mean value of points. |
| MIN | Retain minimum value. |
| MOD | Divide sources, point by point, then retain remainder. |
| MOV | Duplicate value(s) contained in source and place in destination. |
| MPY | Multiply sources, point by point. |
| MXM | Retain maximum value. |
| RMS | Compute root mean square of source, point by point. |
| SQR | Compute square root of source, point by point. |
| STDEV | Compute standard deviation. |
| SUB | Subtract sources, point by point. |
| SUM | Add sources, point by point. |
| SUMSQR | Add square of sources, point by point. |
| VARIANCE | Compute variance. |
| XCH | Exchange sources. |

**To Achieve the Best Accuracy, Use a Single Point for the Destination, Such as a Trace Element or a Variable.** If the destination consists of multiple points, the math functions round the sources first, then perform the requested operation. If the destination is a single point, the math functions compute the results in floating point, and then round the results if necessary. The example below shows how the product of 2.45 and 3.45 is 6 or 8 depending on the character of the destination.

EXAMPLE 1-30. Compute product using single and multiple points as destination.

```
10 CLEAR 718                          Initialize spectrum analyzer.
20 OUTPUT 718;"IP;"
30 OUTPUT 718;"SNGLS;TS;"             Activate single-sweep mode and sweep.
40 OUTPUT 718;"TDF M;"                Return data in measurement units.
50 OUTPUT 718;"MPY TRC,2.45,3.45;"    Fill trace C array with 2 X 3, or 6.
60 OUTPUT 718;"TRC[1]?;"              Return 6 to computer.
70 ENTER 718;N                        Loads trace element with integer value of
80 OUTPUT 718;"MPY TRC[1],2.45,3.45;" 2.45 X 3.45, or 8.
90 OUTPUT 718;"TRC[1]?;"              Return 8 to computer.
100 ENTER 718;M
```

## Using Predefined Functions as Sources

Certain spectrum analyzer commands must be used as a **query** or as a **predefined function**. These commands are listed in Table 1-8.

A command in Table 1-8 becomes a query when the command statement ends with a question mark (?). A command in Table 1-8 becomes a predefined function when it is incorporated into the source of another spectrum analyzer command that contains *predefined function* in its syntax chart. Commands containing predefined function in their syntax charts are called **compatible functions** and are listed in Table 1-9.

**Table 1-8.**
**Commands Restricted to Use as Predefined Functions and Queries**

| Command | Definition |
|---|---|
| AMPU | Amplitude-unit conversion |
| FREQU | Frequency-unit conversion |
| IDFREQ | Identified-signal frequency |
| MEAN | Mean value of data points |
| MEASU | Measurement-unit conversion |
| MEM | Available internal memory |
| MKBW | Marker bandwidth |
| PEAKS | Trace peaks found |
| POSU | Position-unit conversion |
| PWRBW | Power bandwidth |
| RMS | Root mean square |
| STB | Status byte |
| STDEV | Standard deviation of trace values |
| SUM | Sum |
| SUMSQR | Sum of squares |
| VARIANCE | Variance |

**Table 1-9. Compatible Functions**

| Command | | |
|---|---|---|
| ABS | LINET | RCLU |
| ADD | LOG | READMENU |
| AMPU | | RQS |
| AVG | MDS | |
| | MEASU | SAVED |
| BIT | MIN | SAVES |
| | MK | SAVET |
| CONCAT | MKP | SAVEU |
| | MKT | SCALE |
| DIV | MOD | SMOOTH |
| DSPLY | MODADD | SQR |
| DWINDOW | MODID | SUB |
| | MOV | |
| ENTER | MPY | TRA/TRB/TRC |
| EXP | MXM | TRDEF |
| FREQU | OR | USERERR |
| | OUTPUT | |
| GRID | | VARDEF |
| | PA | |
| IF/THEN/ELSE | PDA | WAIT |
| INPUTMOD | PLOT | |
| INT | POSU | XCH |
| IT | PR | |
| IWINDOW | PWRBW | |
| KEYDEF | RCLS | |

In the following example, the POSU command is used as a query. EXAMPLE 1-31. Find marker position in position units. (Connect calibration signal to spectrum analyzer input.)

```
10 CLEAR 718                    Initialize spectrum analyzer.
20 OUTPUT 718;"IP;"
30 OUTPUT 718;"SNGLS;TS;"       Activate single-sweep mode and sweep.
40 OUTPUT 718;"MKPK HI;"        Set marker at highest signal level.
50 OUTPUT 718;"POSU MKF,?;"     Convert marker frequency to position units.
60 ENTER 718;N
```

In the next example, the POSU command is used as a source for another spectrum analyzer command.

EXAMPLE 1-32. Using a predefined function as a source for another programming command.

(Connect calibration signal to spectrum analyzer input.)

```
10 CLEAR 718                          Initialize spectrum analyzer.
20 OUTPUT 718;"IP;"
30 OUTPUT 718;"SNGLS;TS;"             Activate single-sweep mode and sweep.
40 OUTPUT 718;"CF 300MHZ;SP 1MHZ;"    Set measurement range.
45 OUTPUT 718;"TS;"                   Update trace data.
50 OUTPUT 718;"MKPK HI;"              Set marker at highest signal level.
60 OUTPUT 718;"VARDEF VAR,0;"         Declare spectrum analyzer variable called VAR.
70 OUTPUT 718;"MOV VAR,POSU MKF;"     Convert marker frequency to position units.
                                      Transfer value to VAR.
80 OUTPUT 718;"VAR?;"                 Return value, 400, to computer.
90 ENTER 718;N                        Assign value to computer variable.
```

## Storing New Functions in the Spectrum Analyzer

This section tells how to store a series of commands in **internal memory** to form new, custom-made functions called **user-defined functions**. The looping and conditional constructs, REPEAT/UNTIL and IF/THEN/ELSE, and the interrupt functions, ABORT and RETURN, are also described. User-defined functions have many applications. They are ideal for repetitive measurements, and make it possible to conduct complicated measurements with the press of a single front panel key.

When a user-defined function is operating, HP-IB operation is not suspended, leaving the computer free to control other devices on the bus while the spectrum analyzer measures, processes, and stores data. In addition, the operation of user-defined functions does not require a computer; the functions can be activated with the spectrum analyzer keys. This is useful in small-scale test systems, where custom keys help create a friendly user interface to simplify test procedures.

### Storing a User-Defined Function with the FUNCDEF Command

The FUNCDEF (define function) command consolidates a series of spectrum analyzer commands into one function and gives it a name. Executing the function name is the same as executing the series of commands contained in the function.

Before a function can be *executed* it must be *stored* in internal memory. In the example below, the FUNCDEF command stores a user-defined function called HIGH_PEAK in internal memory.

EXAMPLE 1-33. Store user-defined function in spectrum analyzer.

(Connect calibration signal to spectrum analyzer.)

```
10 CLEAR 718
20 OUTPUT 718;"IP;";
30 OUTPUT 718;"FUNCDEF HIGH_PEAK,@FA 50MHZ;FB 1GHZ;TS;MKPK HI;@;"
```

*Matching delimiters (@) mark beginning and end of command series assigned to HIGH_PEAK.*

The easiest way to store new functions in internal memory is with a computer program. The following figure illustrates a program structure that simplifies the process. The model simplifies debugging and documentation, and conserves memory.

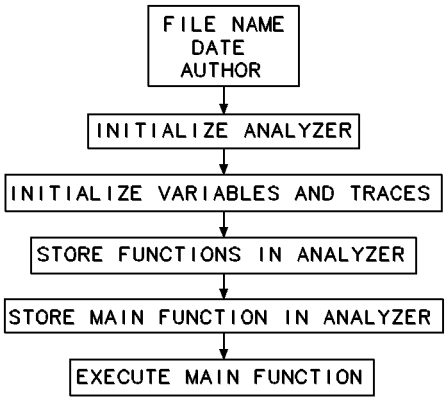


**Figure 1-10. Program Structure for Storing User-Defined Function**

In the model, the first part tells what the program does and gives other appropriate information such as the author's name, the date, and a file name.

The second part initializes the spectrum analyzer in order to form a good starting point for measurements. `CLEAR 718` and `IP` set the spectrum analyzer to a known state. `DISPOSE ALL` clears internal memory to maximize storage space for functions, variables, and traces. (Omit `DISPOSE ALL` if you do *not* wish to erase all of internal memory.)

The third part defines all user-defined variables and traces that are utilized by any of the user-defined functions, specifying a size for each trace and a value for each variable. To avoid memory-overflow problems, define variables and traces apart from any user-defined functions. For instance, if the user-defined function allocates memory for several trace arrays, memory is not allocated to the traces until the function has been executed. Thus, if the amount of available internal memory is checked with the `MEM?` command or the `catalog & MSI` key before the function has been run, the value returned or displayed accounts only for the space occupied by the function, not for the space occupied by the function *plus* the traces.

The fourth part is reserved for user-defined functions that are incorporated into and executed by a main user-defined function, which is the last part of the program. When a series of commands are consolidated in a function, they can be executed many times, even though they are stored in the spectrum analyzer only once. This conserves memory and simplifies programming. The following example illustrates this program structure. Note that the sub-function called VIEW_SIGNAL is executed twice in the main function, SCAN.

EXAMPLE 1-34. Recommended structure for user-defined function.

```
10 !File Name: Peaks Date: 4/1/89 Author: Name

20 !View the largest signal in two ranges using narrow span.

30 !Store the amplitude of the largest signal in each range.

40 CLEAR 718
```
*Initialize spectrum analyzer.*

```
   50 OUTPUT 718;"IP;SNGLS;TS;";
   60 OUTPUT 718;"DISPOSE ALL;";                          Erase internal memory.
   70 OUTPUT 718;"VARDEF AMP_A,0;";                       To save memory, the semi-
                                                          colon at the end of each
                                                          line eliminates the carriage-
                                                          return/line-feed.)
   80 OUTPUT 718;"VARDEF AMP_B,0;";
   90 ! Store sub-function in internal memory.
  100 OUTPUT 718;"FUNCDEF VIEW_SIGNAL,@";                 Begin definition.
  110 OUTPUT 718;"TS;MKPK HI;MKTRACK ON;TS;SP 100KHZ;";   place marker on largest
                                                          signal and view it with
                                                          narrow span width.
  120 OUTPUT 718;"@;";                                    End definition.
  130 ! Store main function in internal memory.
  140 OUTPUT 718;"FUNCDEF SCAN,@";                        Begin definition of SCAN
                                                          function.
  150 OUTPUT 718;"IP;";                                   preset spectrum analyzer.
  160 OUTPUT 718;"FA 50MHZ;FB 400MHZ;";                   Select frequency range.
  170 OUTPUT 718;"VIEW_SIGNAL;";                          execute function that marks
                                                          the highest signal and nar-
                                                          rows span.
  180 OUTPUT 718;"MOV AMP_A,MKA;";                        Store marker amplitude in
                                                          a variable.
  190 OUTPUT 718;"WAIT 2;";
  200 OUTPUT 718;"FA 500MHZ;FB 1GHZ;";                   Select new frequency range.
  210 OUTPUT 718;"VIEW_SIGNAL;";                          execute function that marks
                                                          the highest signal and nar-
                                                          rows the span.
  220 OUTPUT 718;"MOV AMP_B,MKA;";                        Store marker amplitude in
                                                          a variable.
  230 OUTPUT 718;"@;";                                    End definition.
  240 ! Execute main function.
  250 OUTPUT 718;"SCAN;"
  260 END
```

Spectrum analyzers that have the auxiliary HP-HIL keyboard can easily store user-defined functions without the use of a computer.

Here are some additional guidelines for writing user-defined functions:

- Write short program lines and document them when necessary.
- Indent program lines to mark sub-functions and points of looping and branching.
- Use descriptive labels for variables, functions, and traces (memory space permitting).
- Define all variables and traces at the beginning of the program, not within a FUNCDEF definition, when concerned about memory space.
- Use recommended syntax shown in the Language Reference chapter.

## Storing an Active User-Defined Function with the ACTDEF Command

The ACTDEF command creates a user-defined function that operates like an active function. Active functions have the following characteristics:

- Their current value is displayed in the active-function readout.
- Their value can be changed with front panel keys.
- Their value is expressed as a variable for operations with other spectrum analyzer functions. For example, if ACTDEF creates a function called XXXX, the variable XXXX can be used wherever *predefined variable* appears in the syntax charts. (See **predefined variable** in Table 2-2.)

Like the FUNCDEF command, ACTDEF consolidates a series of spectrum analyzer commands into one function and gives it a name. Executing the function name is the same as executing the series of commands contained in the function. In the following example, the function is assigned to a [USER] key. Pressing the key executes the function. Active user-defined functions can also be executed with other functions, or used in computer programs as you use any other spectrum analyzer command.

```
60 OUTPUT 718;"ACTDEF NEW_SPAN,10000000,HZ";   Begin definition of active, user-defined
                                                function, called NEW_SPAN, that has
                                                an initial value of 10 MHz.
70 OUTPUT 718;"@MPY SP,2,NEW_SPAN@"            Multiply NEW_SPAN by 2, then set
                                                span equal to the product. End def-
                                                inition and store the function.
80 OUTPUT 718;"KEYDEF 3,NEW_SPAN;"             Assign function to a [USER] key.
90 OUTPUT 718;"VARDEF YY,0;"                   Create a user-defined variable, YY.
100 OUTPUT 718;"MOV YY,NEW_SPAN;"              Set variable equal to NEW_SPAN.
110 OUTPUT 718;"NEW_SPAN?"                     Return value of NEW_SPAN to computer.
120 ENTER 718;N                                Assign value to computer variable.
```

Once user-defined functions are stored, they can be executed with the front panel keys, with other user-defined functions, or with computer programs as you would other spectrum analyzer commands. (See "Executing User-Defined Functions" in following text.)

In addition to creating a user-defined function, the ACTDEF command creates a temporary variable that has the same name as the user-defined function. The variable can be used for operations as you would use any **predefined variable**. The variable exists as long as the user-defined function is stored in internal memory. Do not use existing user-defined function names or reserved words as labels for user-defined functions. Table 2-4 lists reserved words.

When using a string- or block-data field to transfer a command definition, be sure to use compatible terminators. Also, any block-field commands within the list must be the absolute type (A# block). See the description for the ACTDEF command in the "Language Reference" chapter for more information.

## Catalog of Internal Memory

The storage of user-defined variables and traces can be verified by viewing the catalog of internal memory. To view the catalog, press:

(MENU)

Misc

MORE 1 of 3

catalog & MSI

INTERNL MEMORY

For each stored article, the catalog gives the name of the article, followed by AFUNC or FUNC (for active or ordinary user-defined functions, respectively) and the size in bytes. (See "Memory".)

## Branching, Looping, and Interrupting

Use the IF/THEN/ELSE, REPEAT/UNTIL, ABORT, and RETURN commands to add decision-making, looping, or interrupt capability to user-defined functions.

### If ... Then

The example below tests the marker amplitude, MKA. If MKA is greater than −10 dBm, the amplitude is displayed.

EXAMPLE 1-35. Conditional branching.

```
60 OUTPUT 718;"IF MKA,GT,-10DBM;THEN DSPLY MKA;"
70 OUTPUT 718;"ENDIF;"
```

The example below illustrates multiple conditional branching. If MKA is greater than −10 dBm or less than −30 dBm, the value of MKA is displayed. Otherwise, the message "SIGNAL WITHIN TOLERANCE" is displayed.

EXAMPLE 1-36. Multiple conditional branching.

```
50 OUTPUT 718;"IP;CF 70MHZ;SP 1MHZ;ANNOT OFF;SNGLS;TS;MKPK HI;"
60 OUTPUT 718;"IF MKA,GT,-10DBM;THEN;DSPLY MKA,6,2;ELSIF
MKA,LT,-30DBM;THEN;DSPLY MKA,6,2;"
70 OUTPUT 718;"ELSE TEXT$SIGNAL WITHIN TOLERANCE$;"
80 OUTPUT 718;"ENDIF;"
```

### Repeat ... Until

The following example illustrates a repeat-until loop. Repetition is controlled with a user-defined variable, N, which incrementally increases each time the loop is repeated. The example stores the amplitudes of the three largest signals in the first three elements of a trace array. In addition, N doubles as a pointer that specifies where data is stored in the trace array.

EXAMPLE 1-37. Repeat-until looping construct.

(Connect calibration signal to spectrum analyzer input.)

```
10 CLEAR 718                                  Initialize spectrum analyzer.
20 OUTPUT 718;"IP;"
30 OUTPUT 718;"FA 100MHZ;FB 1.7GHZ;"          Activate single-sweep mode and sweep.
40 OUTPUT 718;"SNGLS;TS;"
```

```
50 OUTPUT 718;"DISPOSE ALL;"                    Clear internal memory. (Optional—
                                                see "Memory".)
60 OUTPUT 718;"TRDEF TR_AMP,10;"                Define 10-element trace, TR_AMP.
70 OUTPUT 718;"VARDEF N,0;"                     Define variable, N, equal to 0.
80 OUTPUT 718;"MKPK HI;"                        Place marker on highest peak.
90 OUTPUT 718;"REPEAT;"                         Begin repeat loop.
100 OUTPUT 718;"ADD N,N,1;"                     Add 1 to N.
110 OUTPUT 718;"MKPK NH;"                       Move marker to next highest peak.
120 OUTPUT 718;"MOV TR_AMP[N],MEASU MKA;"       Store amplitude in nth element of
                                                trace.
130 OUTPUT 718;"UNTIL N,EQ,3;"                  Mark end of repeat loop. Looping
                                                ends when N equals 3.
```

## Abort

The ABORT command stops the execution of all user-defined functions and interrupts the operation of repeat loops. If ABORT is encountered in a function that has been executed by pressing a key, the function is interrupted and front panel control is returned.

If the function is activated by a computer program, ABORT resumes program operation at the first spectrum analyzer command following the function. When, in addition, the function is nested within one or more user-defined functions, ABORT resumes program operation at the first spectrum analyzer command following *all* of the user-defined functions. See Figure 1-11.

The RETURN command stops the operation of the currently executing user-defined function, and returns to the point where the function was originally encountered.

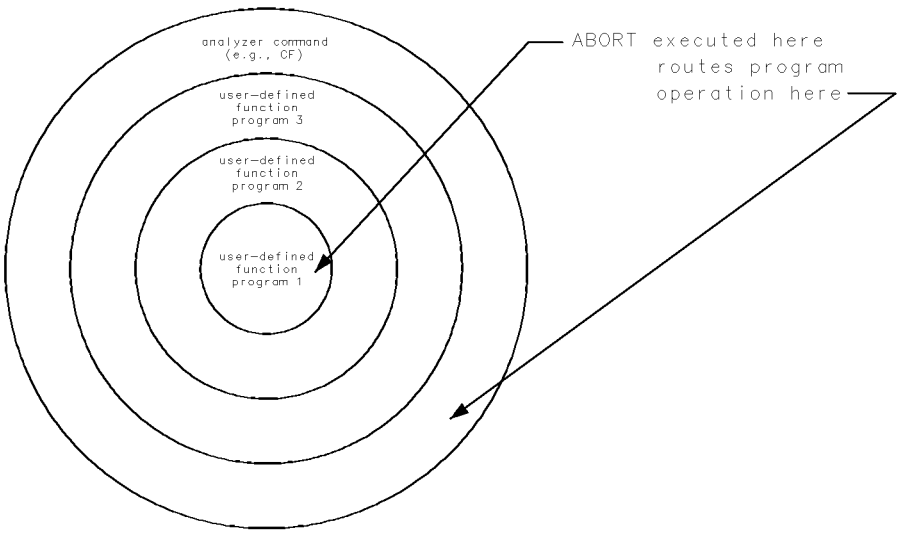


**Figure 1-11.**
**ABORT returns program operation to first predefined function that follows the user-defined function(s).**

Example 1-38 contains a user-defined function, called PROGRAM_1, nested within another function, called PROGRAM_2, which itself is nested within another function called PROGRAM_3. Since none of the functions contain ABORT, executing PROGRAM_3 executes all three sequentially.

In comparison, Example 1-39 includes ABORT in the nested PROGRAM_1 function. When ABORT is encountered, the PROGRAM_1 function is interrupted, the PROGRAM_2 and PROGRAM_3 functions are ignored, and the spectrum analyzer commands following PROGRAM_3 are executed.

EXAMPLE 1-38. Nest user-defined functions three levels deep.

1. PROGRAM_1 writes numbers 100, 200, 300, and 400.

2. PROGRAM_2 writes "INSIDE PROGRAM_2."

3. PROGRAM_3 writes "INSIDE PROGRAM_3."

```
5 CLEAR 718                                                    Initialize spectrum analyzer.
10 OUTPUT 718;"IP;"
20 OUTPUT 718;"TRDSP TRA,OFF;"                                 Turn off trace A.
30 OUTPUT 718;"ANNOT OFF;GRAT OFF;"                            Blank annotation and graticule.
40 OUTPUT 718;"VARDEF YY,0;"                                   Define user-defined vari-
                                                               able, YY, equal to 0.
50 !
60 OUTPUT 718;"FUNCDEF PROGRAM_1,^";                           Define first user-defined func-
                                                               tion, PROGRAM_1. The
                                                               ";" suppresses carriage-return/line-
                                                               feed.
70 OUTPUT 718;"REPEAT;";                                       Begin repeat loop.
80 OUTPUT 718;"ADD YY,YY,100;";                                Add 100 to YY.
90 OUTPUT 718;"PU;PA 100,YY;PD;";                              position pen at coordinate
                                                               (100,YY).
100 OUTPUT 718;"DSPLY YY,4,0;";                                Write value of YY.
110 OUTPUT 718;"IF YY,EQ,300;THEN;ENDIF;";                     This line does nothing.
120 OUTPUT 718;"UNTIL YY,EQ,400;";                             End loop when YY equals
                                                               400.
130 OUTPUT 718;"^;"                                            The "^" marks the begin-
                                                               ning and end of the def-
                                                               inition for a user-defined
                                                               functions. End definition
                                                               of PROGRAM_1.
140 !
150 !
160 OUTPUT 718;"FUNCDEF PROGRAM_2,";                          Define second user-defined
                                                               function, PROGRAM_2.
170 OUTPUT 718;"^PROGRAM_1;TEXT@..INSIDE PROGRAM_2..@;";       Execute PROGRAM_1 and
                                                               write "INSIDE PROGRAM_2."
180 OUTPUT 718;"^;";                                           End definition of PROGRAM_2.
185 !
190 OUTPUT 718;"FUNCDEF PROGRAM_3,";                          Define third user-defined
                                                               function.
200 OUTPUT 718;"^PROGRAM_2;TEXT@INSIDE PROGRAM_3@;";           execute PROGRAM_2 and
                                                               write "INSIDE PROGRAM_3."
210 OUTPUT 718;"^;";                                           End definition of OUTER
                                                               SHELL.
```

```
220 OUTPUT 718;"PROGRAM_3;";
225 !
230 OUTPUT 718;"PU;PA 300,200;";
240 OUTPUT 718;"TEXT@OUTSIDE USER-DEFINED FUNCTIONS@;"
```

*execute PROGRAM_3. When all three user-defined functions have been executed, go to line 230.*

*position pen.*

*Write text.*

EXAMPLE 1-39. Use ABORT to disrupt operation of user-defined functions.

```
5 CLEAR 718                                  Initialize spectrum analyzer.
10 OUTPUT 718;"IP;"
20 OUTPUT 718;"TRDSP TRA,OFF;"               Turn off trace A.
30 OUTPUT 718;"ANNOT OFF;GRAT OFF;"          Blank annotation and graticule.
40 OUTPUT 718;"VARDEF YY,0;"                 Define user-defined variable equal to 0.
50 !
60 OUTPUT 718;"FUNCDEF PROGRAM_1,^";         Define first user-defined function.
70 OUTPUT 718;"REPEAT;";                     Begin repeat loop.
80 OUTPUT 718;"ADD YY,YY,100;"               Add 100 to YY.
90 OUTPUT 718;"PU;PA 100,YY;PD;";            position pen at (100,YY).
100 OUTPUT 718;"DSPLY YY,4,0;";              Write value for YY.
110 OUTPUT 718;"IF YY,EQ,300;THEN; ABORT ;ENDIF;";   ABORT interrupts operation
                                                     of all user-defined functions
                                                     after 300 is displayed. Pro-
                                                     gram operation resumes at line
                                                     230 below.
120 OUTPUT 718;"UNTIL YY,EQ,400;";           End loop when YY equals 400.
130 OUTPUT 718;"^;";
140 !
150 !
160 OUTPUT 718;"FUNCDEF PROGRAM_2,";         Define second user-defined function.
170 OUTPUT 718;"^PROGRAM_1;TEXT@INSIDE PROGRAM_2@;^";   execute PROGRAM_1 and
                                                        write "INSIDE PROGRAM_2."
180 !
190 OUTPUT 718;"FUNCDEF PROGRAM_3,";                    Define third user-defined
                                                        function.
200 OUTPUT 718;"^PROGRAM_2;TEXT@INSIDE PROGRAM_3@;^;";  execute PROGRAM_2 and
                                                        write "INSIDE PROGRAM_3."
210 !
220 OUTPUT 718;"PROGRAM_3;"                             execute PROGRAM_3.
230 OUTPUT 718;" PU;PA 300,200;"                        position pen. Executed
                                                        when ABORT is encountered.
240 OUTPUT 718;"TEXT@OUTSIDE USER-DEFINED FUNCTIONS@;"  Write text.
```

## Executing User-Defined Functions

A user-defined function cannot be executed until it is stored in **internal memory** with the ACTDEF or FUNCDEF command, or recalled to internal memory with the LOAD or RCLD command. Once stored, a user-defined function can be executed with a computer or with the front panel controls.

### Executing User-Defined Functions with a Computer

To execute a user-defined function with a computer, execute the function name with an output statement as you would any spectrum analyzer command. Like other spectrum analyzer commands, user-defined functions require a terminating semicolon. Example 1-40 executes the HIGH_PEAK function. (Example 1-33 stores the HIGH_PEAK function in internal memory.)

EXAMPLE 1-40. Execute a user-defined function.

```
10 OUTPUT 718;"IP;HIGH_PEAK;"
```

### Executing User-Defined Functions with Front-Panel Keys

The `execute DLP` key lists at the right side of the display all user-defined functions stored in internal memory. Press these keys to access `execute DLP`:

(MENU)
`Misc`
`MORE 1 of 3`
`execute DLP`

Press a key to execute its function. The LOAD or RCLU command recalls stored (USER) key files. After keys are recalled, press (LOCAL), (USER), then press the desired function. The KEYDEF command assigns functions to the keys accessed with the (USER) key. Up to 14 keys can be displayed at one time. The keys are numbered 1 through 14, keys 1 and 8 occupying the upper right and left corners, respectively. Below, the PEAK function is assigned to a new key, call "FIND PEAK." To execute the HIGH_PEAK function, press (LOCAL), (USER), `FIND PEAK`.

EXAMPLE 1-41. Assign user-defined function to key.

```
10 OUTPUT 718;"KEYDEF 7,HIGH_PEAK,$FIND PEAK$;"    Specify key number, function,
                                                   and label.
```

The READMENU command facilitates the creation of interacting (USER) key menus. In the next example, READMENU works with the IF/THEN/ELSE commands to build a (USER) key menu that activates three different frequency ranges, called bands A, B, and C. Whenever a key is pressed, the READMENU command transfers the key number to a user-defined variable. The IF/THEN/ELSE commands then test the key number and activate the associated function. The REPEAT/UNTIL commands repeat the key-testing process until the exit key is pressed.

EXAMPLE 1-42. Use READMENU command to build (USER) key menus.

```
10 CLEAR 718                                          Initialize spectrum analyzer.
20 OUTPUT 718;"IP;DISPOSE ALL;"
30 !
40 OUTPUT 718;"FUNCDEF BANDA,@FA 10MHZ;FB 500MHZ;@;"  Declare key functions.
50 OUTPUT 718;"FUNCDEF BANDB,@FA 500MHZ;FB 1GHZ;@;"
60 OUTPUT 718;"FUNCDEF BANDC,@FA 1GHZ;FB 1.5GHZ;@;"
70 !
80 OUTPUT 718;"VARDEF KEY,0;"                         Declare variable for storing key number.
90 OUTPUT 718;"VARDEF END_LOOP,0;"                    Declare variable for monitoring REPEAT loop.
100 !
110 OUTPUT 718;"REPEAT;"                              Begin repeat loop.
120 !
130 !
140 !
150 !
160 OUTPUT 718;"READMENU KEY,1,$BAND A$,2,$BAND       Assign labels to (USER) keys
B$,3,$BANDC$,14,$EXIT$;";                             1, 2, 3, and 14.
                                                      Store pressed-key number
                                                      in variable, KEY.
170 !
180 OUTPUT 718; "IF KEY,EQ,1;THEN;BANDA;";            Evaluate KEY to execute
                                                      function.
190 OUTPUT 718;" ELSIF KEY,EQ,2;THEN;BANDB;";
200 OUTPUT 718;" ELSIF KEY,EQ,3;THEN;BANDC;";
210 OUTPUT 718;" ELSIF KEY,EQ,14;THEN;MOV END_LOOP,1;"; When key 14 is pressed,
                                                      END_LOOP contains a "1"
                                                      and ends repeat loop.
220 OUTPUT 718;" ENDIF;";
230 OUTPUT 718;"UNTIL END_LOOP,EQ,1;"
240 END
```

With further use of the READMENU, KEYDEF, and FUNCDEF commands, you can assign a (USER) key menu to a (USER) key that can be activated by yet another (USER) key, thus creating multilevel menus. The above example has been altered slightly in the next example to demonstrate one way of assigning a menu to another (USER) key. The entire program algorithm is incorporated into a user-defined function, which in turn is assigned to a single (USER) key called `SELECT_SPAN` .

EXAMPLE 1-43. Use READMENU command to build multi-level (USER) key menus.

```
10 CLEAR 718                                          Initialize spectrum analyzer.
20 OUTPUT 718;"IP;DISPOSE ALL;"
30 !
40 OUTPUT 718;"FUNCDEF BANDA,@FA 10MHZ;FB 500MHZ;@;"  Declare key functions.
50 OUTPUT 718;"FUNCDEF BANDB,@FA 500MHZ;FB 1GHZ;@;"
60 OUTPUT 718;"FUNCDEF BANDC,@FA 1GHZ;FB 1.5GHZ;@;"
70 !
80 OUTPUT 718;"VARDEF KEY,0;"                         Declare variable for storing key number.
90 OUTPUT 718;"VARDEF END_LOOP,0;"                    Declare variable for monitoring REPEAT loop.
100 !
105 OUTPUT 718;"FUNCDEF SELECT_SPAN,@";
110 OUTPUT 718;"REPEAT;";                             Begin repeat loop.
120 !
130 ! Assign labels to (USER) keys 1, 2, 3, and 14.
140 ! Store pressed-key number in variable, KEY.
150 !
160 OUTPUT 718;"READMENU KEY,1,$BAND A$,2,$BAND B$,3,$BAND
C$,14,$EXIT$;";
170 !
180 OUTPUT 718;"IF KEY,EQ,1;THEN;BANDA;";             Evaluate KEY to execute function.
190 OUTPUT 718;"ELSIF KEY,EQ,2;THEN;BANDB;";
200 OUTPUT 718;"ELSIF KEY,EQ,3;THEN;BANDC;";
210 OUTPUT 718;"ELSIF KEY,EQ,14;THEN;MOV END_LOOP,1;";  When key 14 is pressed, END_LOOP contains a "1" and ends repeat loop.
220 OUTPUT 718;"ENDIF;";
230 OUTPUT 718;"UNTIL END_LOOP,EQ,1;";
232 OUTPUT 718;"MOV END_LOOP,0;"
235 OUTPUT 718;"@;"
237 OUTPUT 718;"KEYDEF 7,SELECT_SPAN,$SELECT SPAN$;"
240 END
```

## Illegal Operations

Executing a user-defined function within the FUNCDEF command statement that defines it is an illegal recursion that must be avoided:

EXAMPLE 1-44. Illegal recursion with the FUNCDEF command

```
10 OUTPUT 718;"FUNCDEF SELECT_SPAN, @";     Begin definition.
20 OUTPUT 718;"FA 500MHZ;FB 1GHZ;";
30 OUTPUT 718;"SELECT_SPAN;";               Illegal recursion.
40 OUTPUT 718;"@;"                          End definition.
```

(On the other hand, recursion is advantageous when creating *active* user-defined functions with the ACTDEF command. See the example in the ACTDEF command description in the next chapter.) Do not use reserved words as user-defined function names. This interrupts the defining process and executes the invoked function instead. For example, if the user-defined function in the previous example was called "SS" instead of "SELECT_SPAN," the spectrum analyzer step-size function would be activated. Likewise, if the function was called "ALL," it would disrupt the operation of any function modified by ALL, such as `DISPOSE ALL`. Reserved words are listed in Table 2-4. In addition, any names created by the VARDEF, ACTDEF, TRDEF, or FUNCDEF commands become reserved words until they are erased from internal memory.

## Memory

Memory is an area where information can be stored for future recall. Memory that is available for the user is called **user memory**. User memory has three locations:

- **Internal memory**, located within the spectrum analyzer.
- **External memory** located on HP-IB, such as a disc drive.
- **External memory** located on HP-MSIB, such as the **memory card** in the HP 70004A color display.

**Internal memory** is nonvolatile and is not altered by loss of power. Internal memory remains nonvolatile as long as the 3.6 V lithium battery supplies power. This battery should last 8 years at 25°C, or one year at 55° C.

The following articles can be stored in internal memory until it is full. The storing command is shown in parentheses:

- User-defined trace (TRDEF, LOAD)
- User-defined variable (VARDEF, LOAD)
- User-defined function (FUNCDEF, LOAD)
- Active user-defined function (ACTDEF, LOAD)
- On-end-of-sweep algorithm (ONEOS, LOAD)
- Trace-amplitude correction offsets (AMPCOR)
- State register file (instrument settings and title line - STOR, NSTATE, SAVES)
- Trace file (STOR, SAVET)
- (USER) keys file (STOR, SAVEU)
- Limit-line file (STOR, LIMISAV)

**External memory** is also nonvolatile and is not altered by loss of power. Unlike internal memory, external memory can only store files that are saved with the SAVE and STOR commands:

- State register file (Instrument settings and title-line - STOR, SAVES)
- Trace file (STOR, SAVET)
- (USER) keys file (STOR, SAVEU)
- Limit-line file (STOR, LIMISAV)
- Program file (STOR, SAVED)

Use the mass-storage-interface command, MSI, to select the desired user memory. When power is applied to the spectrum analyzer, internal memory is selected until the MSI command or the `catalog & MSI` key selects another storage device.

The catalog of user memory gives a description of articles stored in the currently selected user memory. To select a user-memory area using the computer, execute the MSI command. To select a user-memory area by using the front panel controls, press `Misc`, `MORE`, `catalog & MSI`, then select one of the following keys.

- `HP-MSIB DSK&CRD` selects **external memory** that is accessed on an HP-MSIB device, which is any instrument or display connected to the Hewlett-Packard Measurement System Interface Bus. For example, select `HP-MSIB DSK&CRD` to store articles in a memory card on the HP 70004A color display. Or use the key to access a disk drive connected to the HP-IB port of another HP-MSIB device.
- `HP-IB DISK` selects **external memory** that is accessed on an HP-IB device connected to the spectrum analyzer HP-IB port. For example, use `HP-IB DSK&CRD` to store articles on a disk drive connected to the spectrum analyzer HP-IB port.
- `INTRNL MEMORY` selects **internal memory** in the spectrum analyzer.

To view the catalog, execute `DSPMODE CAT` or press the following keys:

(MENU)
`Misc`
`MORE`
`catalog & MSI`

Stored articles are listed by name, followed by the article type, and the size of the article in bytes. The names of files stored by the save commands consist of a number preceded by a prefix that indicates the type of data stored in the file. The prefix can be changed with the PREFX command or the `CHANGE PREFIX` key.

The articles that can be stored in user memory are listed in Table 1-10.

**Table 1-10. Catalog of User Memory**

| Stored Article | Storing and Recalling Commands | File Type | Default File Prefix |
|---|---|---|---|
| User-defined trace* | TRDEF, LOAD, RCLD | TRACE | none |
| User-defined variable* | VARDEF, LOAD, RCLD | VAR | none |
| User-defined function * | FUNCDEF, LOAD, RCLD | FUNC | none |
| Active user-defined function * | ACTDEF, LOAD, RCLD | AFUNC | none |
| On-end-of-sweep algorithm * | ONEOS, LOAD, RCLD | ONEOS | none |
| Trace-amplitude correction offsets* | AMPCOR | AMPCOR | none |
| Limit-line trace arrays, LIMIT_LO and LIMIT_HI* | LIMILINE, LOAD, RCLD | TRACE | none |
| State-register file (instrument settings and title-line) | STOR, LOAD, SAVES, NSTATE, RCLS | ASCII | s_ |
| Program file† | STOR, SAVED, RCLD | ASCII | d_ |
| Trace file | STOR, LOAD, SAVET, RCLT | ASCII | t_ |
| (USER) keys file | STOR, LOAD, SAVEU, RCLU | ASCII | u_ |
| Limit-line file | STOR, LOAD, LIMISAV, LIMIRCL | ASCII | l_ |

*Indicates article can be stored in internal memory only

†Indicates file can be stored in external memory only

Additional memory in the spectrum analyzer is reserved for the operations that are not under the user's control. Unlike internal memory, **reserved memory** is affected by power loss. All active trace information is lost during power loss. The current values of all predefined variables and instrument settings are lost unless they are stored in a state-register file before power is removed. However, all instrument settings and predefined variables not saved in state registers may be retrieved when power is returned if the POWERON key or command is set to LAST before power is removed. Otherwise, the instrument settings and predefined variables return to their preset state when power is returned.

## Memory Card

Memory cards are available for **external memory** when the spectrum analyzer is installed in the HP 70004A color display or connected to it via HP-MSIB.

Insert the card with the arrow facing up into the slot. When correctly installed, a portion of the card (2 cm) is exposed. Improper insertion can produce error messages.

The memory card requires power. The HP 70004A color display provides power to the card when it is installed. When the card is removed, power is supplied by a battery. *Items stored in the memory card remain as long as the card has sufficient power.* Change the memory-card battery every two years. Refer to the "Installation for Remote Operation" section at the beginning of this chapter for battery-installation instructions.

## Erasing Memory

Various portions of memory can be erased or protected against erasure with the commands summarized in Table 1-11.

**Table 1-11. Commands that Erase or Protect User Memory**

| Memory Components Storing Commands Shown in Parentheses | Commands that Erase or Reset Memory | | | Commands that Protect Memory | |
|---|---|---|---|---|---|
| | PURGE<br>FORMAT | DISPOSE*<br>PERASE*<br>ERASE* | NSTATE | PROTECT† | PSTATE |
| **user-defined variable (VARDEF, LOAD, RCLD)** | X | X | | X | |
| **user-defined trace (TRDEF, LOAD, RCLD)** | X | X | | X | |
| **user-defined function (FUNCDEF, LOAD, RCLD)** | X | X | | X | |
| **active user-defined function (ACTDEF, LOAD, RCLD)** | X | X | | X | |
| **on-end-of-sweep-algorithm (ONEOS, LOAD, RCLD)** | X | X | | X | |
| **trace-amplitude correction factors (AMPCOR)** | X | X | | X | |
| **state register file (instrument settings and title line, SAVES, STOR)** | X | X | X | X | X |
| **program file (SAVED, STOR)** | X | X | | X | |
| **trace file(SAVET, STOR)** | X | X | | X | |
| **(USER) keys file (SAVEU, STOR)** | X | X | | X | |
| **Limit line file (LIMISAV, STOR)** | X | X | | X | |

*DISPOSE, PERASE, and ERASE erase internal memory only.

†PROTECT protects internal memory only.

The following table shows which commands erase reserved memory.

**Table 1-12. Commands that Erase Reserved Memory**

| Memory Components | Commands that Erase or Reset Memory | | |
|---|---|---|---|
| | PERASE | ERASE | IP |
| **correction factors(CAL)** | | X | |
| **serial numbers** | | X | |
| **active trace data (trace A, B, or C)** | X | X | X |
| **instrument settings not stored in state registers** | X | X | X |

### Erasing User Memory

Articles are erased from internal memory singly or in mass with the DISPOSE command. `DISPOSE ALL` erases *all* contents of internal memory.

EXAMPLE 1-45. Erase internal memory.

```
10 OUTPUT 718;"DISPOSE HIGH_PEAK;"   Erase a user-defined function from internal memory.
20 OUTPUT 718;"DISPOSE ALL;"         Erase all user-defined articles from internal
                                     memory.
```

Use the PURGE command to erase articles from either internal or external memory, depending on the storage device selected.

EXAMPLE 1-46. Erase an entry from the selected storage device.

```
10 OUTPUT 718;"MSI MSIB;"        Select memory card located at default HP-MSIB device.
20 OUTPUT 718;"PURGE $s_2$;"     Erase state-register file. Delimiters required when file
                                 name contains a number.
```

The ERASE command erases *all memory in the spectrum analyzer* for security purposes, including internal memory, instrument settings, serial-number information, trace data, correction factors, and offsets.

EXAMPLE 1-47. Erase *all memory in the spectrum analyzer* for security purposes.

```
10 OUTPUT 718;"ERASE;"
```

**Note** Use the ERASE command for security purposes only. ERASE destroys *all* contents of internal memory. ERASE does not erase data in external memory, such as memory on a memory card or a disk drive.

After executing ERASE, follow this procedure:

1. Execute system-level command, `CLEAR 718` (in HP BASIC), to reset input buffer on spectrum analyzer.
2. Recycle power on spectrum analyzer.
3. Execute the error-correction routines to obtain calibrated measurement results. (See the CAL command in the next chapter or see "Preparing the Spectrum Analyzer for Measurements" in the *HP 70000 Series modular spectrum analyzer system Operation Manual.*)

The partial erase command, PERASE, erases all internal memory and instrument settings. PERASE does not affect the correction factors or serial-number information.

EXAMPLE 1-48. Erase all internal memory except correction factors and serial-number information.

```
10 OUTPUT 718;"PERASE;"
```

The FORMAT command erases internal or external memory. If a memory card or a disk drive (floppy) is selected with the MSI command, FORMAT initializes it.

### Preventing Erasure of User Memory

The protect command protects **internal memory** against erasure by the PERASE, FORMAT and DISPOSE commands.

EXAMPLE 1-49. Protect internal memory against erasure with the DISPOSE, FORMAT or PERASE command.

```
10 OUTPUT 718;"PROTECT HIGH_PEAK,ON;"    Protect user-defined function, HIGH_PEAK.
```

EXAMPLE 1-50. Erase protected article in internal memory.

```
10 OUTPUT 718;"PROTECT HIGH_PEAK,OFF;"   Turn off internal memory protection.
20 OUTPUT 718;"DISPOSE HIGH_PEAK;"       Erase HIGH_PEAK.
```

---

**Note** The PROTECT and PSTATE commands do not prevent internal memory erasure with the ERASE command.

---

The PSTATE command protects state-register files on both internal or external memory.

EXAMPLE 1-51. Protect a state-register file on a memory card in the HP 70004A color display.

```
10 OUTPUT 718;"MSI MSIB;"    Select memory card on HP 70004A color display.
20 OUTPUT 718;"PSTATE ON;"   protect all state-register files on the memory card.
```

The write-protect switch, when set to SAFE, protects the contents of the memory card. For other HP-MSIB or HP-IB devices, refer to protection instructions for your particular mass storage device.

## Conserving Memory

When internal memory is full, an overflow message appears on the screen. The amount of available memory varies with the system configuration. If internal memory space is critical, it may be conserved in several ways.

Available internal memory is increased by erasing all user-defined traces, variables, and functions as follows.

EXAMPLE 1-52. Maximize available internal memory.

```
10 OUTPUT 718;"DISPOSE ALL;"    Dispose all unprotected variables, traces, functions,
                                keys, and on-end-of-sweep algorithms.
```

The following example erases all state-register files only from external or internal memory.

```
20 OUTPUT 718;"PSTATE OFF;NSTATE 0;"    Disable protection, then delete state-register
                                        files.
```

The PURGE command erases individual files or user-defined articles from external or internal memory.

EXAMPLE 1-53. Erase a file.

```
30 OUTPUT 718;"MSI MSIB;"           Select HP-MSIB storage device (for example,
                                    memory card).
40 OUTPUT 718;"PURGE $test_file$;"  Erase file.
```

Erase unneeded traces, variables, and functions using PURGE or DISPOSE, or reduce trace size using TRDEF. An 800 element trace occupies about 1646 bytes of memory, that is, about 2 bytes for each element and about 46 bytes for trace overhead. Use PURGE to erase files from internal or external memory.

User-defined functions may be streamlined to conserve user memory. The space they occupy is reduced by inhibiting the carriage-return/line-feed (CR/LF) generated by the computer at the end of each program line. The HIGH_PEAK function is shown below with CR/LF suppressed. Using this configuration, HIGH_PEAK occupies 14% less memory space, that is, 30 bytes instead of 36.

EXAMPLE 1-54. Suppress carriage-return/line-feed to conserve memory when storing user-defined functions.

(Connect calibration signal to spectrum analyzer input.)

```
10 CLEAR 718
20 OUTPUT 718;"IP;DISPOSE ALL;"
30 OUTPUT 718;"FUNCDEF HIGH_PEAK,@";    Semicolon added to suppress CR/LF.
40 OUTPUT 718;"FA 50MHZ;FB 1GHZ;";      Semicolon added to suppress CR/LF.
50 OUTPUT 718;"TS;MKPK HI;";            Semicolon added to suppress CR/LF.
60 OUTPUT 718;"@;"
```

## Monitoring System Operation

The programming techniques discussed so far describe communication between the spectrum analyzer and the computer, where the sequence of all data transfer is controlled by a computer program. This section tells how the spectrum spectrum analyzer can interrupt computer operation when the spectrum analyzer has attained a particular state.

The interrupting process is called a service request. Service requests have many applications. They facilitate economical use of computer processing time when the spectrum analyzer is part of a large-scale measurement system. For example, after the computer initiates an spectrum analyzer measurement, the computer can make calculations or control other devices via HP-IB while the spectrum analyzer is measuring. When the spectrum analyzer is through, it signals the computer with a service request. The service-request subprogram then determines what the computer will do next. Service requests can also report spectrum analyzer errors while interrupting computer processing.

### Interrupt Process

The interrupt process begins when the spectrum analyzer "requests" attention by setting the HP-IB service-request (SRQ) line true. The computer responds by branching to a special subroutine that examines the status of each instrument on HP-IB. Computer operation then branches to another subroutine that is determined by the status of the instrument that requested service (the spectrum analyzer in this case). In this way, the computer "services" the spectrum analyzer's "request." These steps are summarized below:

1. Computer monitors HP-IB service-request (SRQ) line.
2. Analyzer requests service by setting SRQ line true.
3. Computer branches to subroutine that examines spectrum analyzer state.
4. Computer branches to subroutine determined by spectrum analyzer state.

Several system-level commands are required to make the computer responsive to service requests. The HP BASIC command, ENABLE INTR (enable interrupt), tells the computer to monitor the service-request line. The on-interrupt command, ON INTR, specifies where the computer program will branch when a service request occurs. If more than one service request is possible, the serial-poll command, SPOLL, is needed to examine the nature of the service request. These HP BASIC commands, ENABLE INTR, ON INTR, and SPOLL, are used with the HP 9000 Series 200/300 controller.

#### Analyzer Status-Byte Register

The spectrum analyzer **status-byte register** is the communicating link between the spectrum analyzer and the computer. The status-byte register indicates what state the spectrum analyzer is in.

The status-byte register consists of eight bits. Bits 0, 1, 2, 4, and 5 represent particular aspects of spectrum analyzer operation, such as end-of-sweep, or error conditions. These are listed in Table 1-13. The state of these bits, set (true) or cleared (false), is determined by the spectrum analyzer state.

If the service-request mode is enabled, all of the status-byte bits reflect the current state of the spectrum analyzer until the conditions of a service request are met. In this case, the bit or bits that satisfy the service-request condition remain in the true state until the status byte is interrogated by the system-level, serial-poll command SPOLL, or until the system-level CLEAR command is executed. These commands clear the status byte so that all the bits in the byte once again reflect the current state of the spectrum analyzer until another service request occurs. In this way, the process begins again.

### The Service-Request Mask

The service-request mode is enabled and controlled by the request-service-condition command, RQS. It defines a **service-request mask** which specifies which of the status-byte bits may generate a service request. Below, RQS specifies the ERROR-PRESENT and COMMAND-COMPLETE states (bits 5 and 4) for service requests.

EXAMPLE 1-55. Enable service requests for an ERROR-PRESENT condition.

```
OUTPUT 718;"RQS 48;"
```
*Selects bit 5 and 32 to enable service-request mode for ERROR-PRESENT.*

Once RQS is executed, the spectrum analyzer requests service by setting the SRQ line true when any of the enabled conditions become true.

**Table 1-13. Spectrum-Analyzer Status-Byte Register**

| Bit Number | Decimal Equivalent | Analyzer State | Description |
|---|---|---|---|
| 7 | 128 | | Unused |
| 6 | 64 | RQS | Set when any selected service condition is met. |
| 5 | 32 | ERROR-PRESENT | Set when error register contains an error. |
| 4 | 16 | COMMAND-COMPLETE | Set at completion of command execution. |
| 3 | 8 | | Unused |
| 2 | 4 | END-OF-SWEEP | Set at completion of sweep. |
| 1 | 2 | MESSAGE | Set when messages appear, such as the uncalibrated or uncorrected prompts, “UNCAL” or “UNCOR.” |
| 0 | 1 | TRIGGER-ARMED | Set when spectrum analyzer is ready to receive a sweep trigger. |

## Service-Request Examples

The following program uses service requests to monitor measurement errors in the spectrum analyzer. If an error occurs, computer operation is interrupted and a description of the error is printed.

EXAMPLE 1-56. Enable ERROR-PRESENT service request and return error description.

```
10 ASSIGN @Sa TO 718                                    Initialize spectrum analyzer.
20 COM\INSTR\@Sa
30 CLEAR @Sa
40 OUTPUT @Sa;"IP;SNGLS;TS;"
50 ON INTR 7 CALL Error                                 Define computer interrupt
                                                        branching.
60 ENABLE INTR 7;2                                      Enable computer interrupts.
70 OUTPUT @Sa;"RQS 32;"                                 Enable ERROR-PRESENT
                                                        service request.
80 !
90 Idle:GOTO Idle                                       Monitor service request line
                                                        while measuring. (This is
                                                        where your measurement
                                                        routine belongs.)
100 !
110 END
120
130 SUB Error                                           Interrupt-handling subroutine.
140 COM\INST\@Sa
150 DIM Mod_num$[6],Err_text$[30]
160 OUTPUT @Sa;"XERR?;"                                 Return error description.
170 ENTER @Sa
USING"5(K)";Error_num,Mod_num$,Row_num,Col_num,Err_text$
180 PRINT Error_num;Mod_num$;Row_num;Col_num;Err_text$
190 SUBEND
```

The next program uses service requests to allow the computer to process data or control other instruments while the spectrum analyzer is taking a long sweep. When the sweep is completed, the spectrum analyzer generates a service request which interrupts the computer, instructing it to accept the measurement data from the spectrum analyzer.

EXAMPLE 1-57. Enable END-OF-SWEEP interrupt, then return trace data when the sweep has ended.

```
10 OPTION BASE 1                 Define first element of array as "1."
20 ASSIGN @Sa TO 718             Initialize spectrum analyzer.
30 COM\INSTR\@Sa
40 COM Trace_a(800)
50 CLEAR @Sa
60 OUTPUT @Sa;"IP;SNGLS;TS;"
70 ON INTR 7 CALL Trace_out      Define computer-interrupt branching.
80 ENABLE INTR 7;2               Enable interrupts.
90 OUTPUT @Sa;"RQS 4;"           Enable END-OF-SWEEP service request.
100 OUTPUT @Sa;"ST 100S;"        Set sweep time to 100 seconds.
110 OUTPUT @Sa;"TS;"             Sweep spectrum analyzer.
120 !
130 Idle: GOTO Idle              Monitor service-request line while controlling other
                                 devices via HP-IB.
140 !
150 END
160 !
170 SUB Trace_out                Trace-output subprogram.
180 OPTION BASE 1
190 COM\INST\@Sa
200 COM Trace_a(800)
210 OUTPUT @Sa;"TRA?;"           Return trace data.
220 ENTER @Sa;Trace_a(*)
230 SUBEND
```

The following program handles two types of service requests. One of them requests service when the spectrum analyzer has completed a sweep. The other requests service when an error occurs in the spectrum analyzer. When either request is generated, the computer examines the status-byte register using the SPOLL command to determine what caused the service request (end of sweep).

EXAMPLE 1-58. Enable multiple service requests. Use HP BASIC command, SPOLL, to examine status byte.

```
10 OPTION BASE 1
20 ASSIGN @Sa TO 718
30 COM\INSTR\@Sa
40 COM Trace_a(800)
50 CLEAR @Sa
60 OUTPUT @Sa;"IP;SNGLS;TS;"
70 ON INTR 7 CALL Interrupt
80 ENABLE INTR 7;2
90 OUTPUT @Sa;"RQS 36;"
100 OUTPUT @Sa;"ST 10S;"
110 OUTPUT @Sa;"TS;"
120 !
130 Idle: GOTO Idle
140 !
150 END
160 !
170 SUB Interrupt
180 S=SPOLL (718)
190 IF BIT(S,2)THEN CALL Trace_out
200 IF BIT(S,5)THEN CALL Error
210 SUBEND
220 !
230 !
240 SUB Trace_out
250 OPTION BASE 1
260 COM\INSTR\@Sa
270 COM trace_a(800)
280 OUTPUT @Sa;"TRA?;"
290 ENTER @Sa;Trace_a(*)
300 SUBEND
310 !
320 SUB Error
330 DIM Mod_num$[6],Err_text$[30]
340 ASSIGN @Sa TO 718
350 OUTPUT @Sa;"XERR?;"
360 ENTER @Sa USING
"S(K)";Error_num,Mod_num$,Row_num,Col_num,Err_text$
370 PRINT Error_num;Mod_num$;Row_num;Col_num;Err_text$
380 SUBEND
```

## Monitoring System Operation without Using Service Requests

The easiest method to synchronize the execution of commands with other events is with the DONE command. This has the disadvantage that the computer is not available for other processing while waiting for the spectrum analyzer to complete its commands.

The STB command may be used to monitor the value of the status byte at any time. Executing `STB?` returns the decimal equivalent of the status-byte register to the computer. Executing `STB?` is similar but not identical to conducting a serial poll of the status byte. Both methods will return the current value of hte status byte. When `STB?` is executed, the status-byte register is cleared, and then bit 4, COMMAND-COMPLETE, is set. When a serial poll is done, the status byte is cleared only if the service request mask is nonzero, as set by the RQS command.

To use the status byte to monitor the completion of any command without using the computer interrupt system, the following sequence should be followed:

1. Send all commands required before the command that is to be monitored.
2. Send `DONE?` to the spectrum analyzer followed by a query. The purpose is to ensure that all above commands have been completed.
3. Send `RQS 16`, COMMAND-COMPLETE, to the spectrum analyzer. This instructs the spectrum analyzer to generate a service interrupt when the command is complete. It is not necessary to enable the interrupt system of the computer.
4. Do a serial poll of the spectrum analyzer status byte (by using SPOLL in HP BASIC). This clears the status byte including bit 4, COMMAND-COMPLETE.
5. Send the command that is to be monitored to the spectrum analyzer.
6. Do a serial poll of the spectrum analyzer status byte anytime that it is desired in order to determine if the command sent in step 5 above has been completed. Bit 4 of the status byte will be clear until the command completes. Once the command is completed, bit 4 will be set the next time that the status byte is queried.

## Spectrum Analyzer Control of HP-IB

This section tells how to use the spectrum analyzer as a controller on HP-IB. As a controller, the spectrum analyzer can transfer data to or accept data from other HP-IB devices, thus expanding its measurement capability. For example, the spectrum analyzer can control an HP-IB switch driver to select the correct antenna for an EMI measurement, or the spectrum analyzer can execute a system-calibration routine that controls a power meter and signal source.

### OUTPUT and ENTER Commands

Use the OUTPUT command to send data to an HP-IB device located at a particular HP-IB address. Below, the spectrum analyzer sends the message "FA 1MHZ" to a device at HP-IB address 19.

EXAMPLE 1-59. Control HP-IB. Send data to HP-IB device.

```
10 OUTPUT 718;"OUTPUT 19,KL,$FA 1MHZ;$;"    Set start frequency.
```

Data is sent as free-field ASCII numbers in three different output formats, called, K, KC, and KL. The K format sends data without a terminator. The KC format terminates the data with a carriage- return/line-feed. The KL format terminates data with a line-feed and EOI (end-or-identify). Use the format that is compatible with the HP-IB device receiving the data. Data may also be sent as non-ASCII numbers using the F format, which specifies the number of characters (field width) and decimal places.

Use the ENTER command to receive data from an HP-IB device. Below, ENTER receives a value sent by the device at HP-IB address 19 and stores the value in a user-defined variable in the spectrum analyzer.

EXAMPLE 1-60. Control HP-IB. Request data from HP-IB device.

```
10 OUTPUT 718;"OUTPUT 19,KL,$CF?;$;"    Request center frequency value.
20 OUTPUT 718;"ENTER 19,K,NN;"           Receive center frequency value.
```

Three input formats for data are available: K for free-field ASCII numbers, B for bytes (8 bits), and W for words (2 bytes). Be sure to use an input format that is compatible with the output format of the HP-IB device.

In the program below, the spectrum analyzer sets the start frequency of a sweeper equal to the spectrum analyzer start frequency. The message must be sent with several output statements, since one part of the message is a string of characters and another part is a spectrum analyzer variable. Notice that a character string must be delimited.

EXAMPLE 1-61. Set sweeper start frequency equal to spectrum analyzer start frequency.

```
10 OUTPUT 718;"OUTPUT 19,K,$FA$;"      Send letters "FA" to the sweeper.
20 OUTPUT 718;"OUTPUT 19,K,FA;"        Send current value of spectrum analyzer
                                        start frequency.
30 OUTPUT 718;"OUTPUT 19,KL,$HZ;$;"    Send letters "HZ" to the sweeper.
```

## Computer Control Versus Spectrum Analyzer Control of HP-IB

The spectrum analyzer can control HP-IB only if the computer is not in control of HP-IB. (Only one controller can control HP-IB at any time.) For this reason, ENTER and OUTPUT commands are incorporated into user-defined functions that are executed by the spectrum analyzer with user-defined keys. (See FUNCDEF and KEYDEF commands in the previous section, "Storing New Functions in the Spectrum Analyzer.")

Before the ENTER and OUTPUT functions are executed, the computer must be disconnected from HP-IB. This is accomplished by either physically disconnecting the computer from the bus, or by executing the HP-IB system-level commands that release the computer from HP- IB. The HP-BASIC command sequence that does this is shown below.

EXAMPLE 1-62. Release computer from HP-IB.

```
10 LOCAL 7
20 ABORT 7
```

The release HP-IB command (RELHPIB) must be included at the end of any user-defined functions containing ENTER or OUTPUT commands. This ensures that the spectrum analyzer surrenders control of HP-IB after all ENTER and OUTPUT commands have been executed.

## Debugging Programs

The debug mode simplifies analysis of faulty programs. When the mode is on, spectrum analyzer commands are displayed on the **data line** (located below the graticule) as they are received. When a faulty spectrum analyzer command is encountered, subsequent spectrum analyzer commands are not executed. The faulty command is the last command shown to the right end of the data line.

The debug mode has a fast and slow setting. Fast debugging is useful for trapping errors. Slow debugging executes the program slowly so you can monitor the execution of each command, much like stepping through a program on a computer.

Both slow and fast debugging modes slow the execution of spectrum analyzer commands and should be turned off when not needed, either with the front panel controls or remotely via HP-IB.

Executing `DEBUG ON` or `DEBUG FAST` selects fast debugging. Executing `DEBUG SLOW` selects slow debugging. The `DEBUG OFF` command turns off the debug mode. Position debug commands ahead of the program sections that need analysis.

EXAMPLE 1-63. Debug a faulty spectrum analyzer program.

(Connect calibrator signal to spectrum analyzer input.)

```
10 CLEAR 718                                  Initialize spectrum analyzer.
20 OUTPUT 718;"IP;SNGLS;TS;"
30 OUTPUT 718;"DEBUG SLOW;"                   Activate slow debug mode.
40 OUTPUT 718;"CF 300MHZ;ILLEGAL 100MHZ;"     Analyzer operation stops at illegal com-
                                              mand, called ILLEGAL.
50 OUTPUT 718;"TS;"
60 OUTPUT 718;"MKPK HI;"
```

The PAUSE command is another debugging function. When executed, PAUSE suspends program operation and activates the debugging front panel keys, `STEP` and `CONT`. `STEP` executes the spectrum analyzer program, one command at a time. `CONT` continues program operation.

Once program operation is halted, either by command or by error during debug mode, no further remote input is possible until `CONT` is pressed or `DEBUG On Off` is set to off, or a device-clear is sent (HP BASIC command CLEAR 718).

# Creating Graphics

This section describes methods for drawing objects and printing text anywhere on the display. A display, such as the HP 70004A color display, HP 70205A graphics display, or HP 70206A system graphics display, is required for graphics capability.

## Clearing the Display

The spectrum analyzer display is blanked before drawing graphics as follows:

EXAMPLE 1-64. Clear the display.

```
30 OUTPUT 718;"IP;"                    Preset spectrum analyzer settings.
40 OUTPUT 718;"CLRDSP;"                Clear all graphics from the display and memory.
50 OUTPUT 718;"ANNOT OFF;GRAT OFF;"    Blank annotation and graticule.
60 OUTPUT 718;"TRDSP TRA,OFF;"         Blank trace A.
```

The CLRDSP command erases *all* user-created graphics from the display and memory, except the contents of the **title line**. If you have stored graphics you wish to recall for future display, use the DELETE command to erase items individually.

Executing `ANNOT OFF` blanks all annotation except the **display status box** and the **data line**.

Executing `GRAT OFF` blanks the graticule. You may create a different graticule with the GRID command explained at the end of this section.

The TRDSP (trace display) command differs from the BLANK command. Unlike BLANK, traces blanked with TRDSP can be updated with each sweep or marked with markers.

In the clearing sequence above, the IP command blanks the display line, trace B, and trace C by executing `DL OFF`, `BLANK TRB`, and `BLANK TRC` automatically. If you do not wish to preset the spectrum analyzer settings with IP, you may remove traces B and C and the display line from the display as shown in lines 70 – 90 below.

EXAMPLE 1-65. Clear the display without presetting the spectrum analyzer settings.

```
40 OUTPUT 718;"CLRDSP;"                Clear graphics from the display and memory.
50 OUTPUT 718;"ANNOT OFF;GRAT OFF;"    Blank annotation and graticule.
60 OUTPUT 718;"TRDSP TRA,OFF;"         Blank trace A.
70 OUTPUT 718;"TRDSP TRB,OFF;"         Blank trace B.
80 OUTPUT 718;"TRDSP TRC,OFF;"         Blank trace C.
90 OUTPUT 718;"DL OFF;"                Blank display line.
```

The remaining program examples in this chapter assume the spectrum analyzer has been initialized and its display has been cleared with lines 40 through 90 above.

## Two Graphics Techniques

Two techniques are available for creating graphics. The simplest uses the plot-absolute and plot-relative commands, PA and PR, to position text and graphics. Once drawn, objects *cannot* be moved, erased, or redrawn. A second technique, referred to as the reference-graphics mode, draws and positions objects or short lines of text that can be modified at a later time. Most of the examples in this section illustrate the simple graphics techniques, though any of the examples can be modified to use the reference-graphics mode. See the description for "Items" at the end of this section for a description of the reference-graphics mode.

## Pen Control

Creating graphics is just like using a pen and paper. Graphics are drawn on the display using an imaginary pen on an electronic tablet. The PD (pen down) command draws on the display as the pen is moved. The PU (pen up) command lifts the pen. Use PU to reposition the pen without drawing. When the pen is lifted, previously drawn graphics are not erased (just as with a pen and paper).

The pen must be placed down to draw all objects except those defined with the item command, IT, or characters written with the TITLE or TEXT command. Place the pen down to draw the objects listed in Table 1-14.

**Table 1-14. Commands Requiring the PD Command**

| Object Drawn | Command |
|---|---|
| Line | PA, PR |
| Grid | GRID |
| Graphics Marker | MK |
| Trace | GRAPH |

The pen is positioned on an X-Y coordinate system different ways. The PA command (plot absolute) moves the pen to an absolute position on the display. The PR command (plot relative) moves the pen to a position on the display relative to the current pen position. When using the item command, IT, graphics are positioned with OR. (See "Items" at the end of this section for a discussion of the reference graphics mode.)

PA and PR are followed by a series of X-Y coordinate pairs. If several program lines are used to specify coordinate pairs, carriage return and line feed must be suppressed at the end of the program line, or the PA and PR commands are terminated before the entire list of coordinate pairs is processed. In the example below, the carriage return and line feed are suppressed with a semicolon.

EXAMPLE 1-66. Draw a rectangle using the PA command.

(Initialize spectrum analyzer and clear the display.)

```
100 OUTPUT 718;"PU;PA 0,0;PD;"                  Position pen.
120 OUTPUT 718;"PA 300,0,300,200,0,200,";       Draw a rectangle. Semicolon suppresses
                                                carriage return and line feed.
130 OUTPUT 718;"0,0;"
```

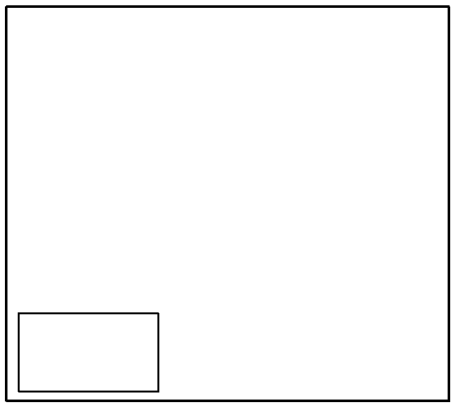

**Figure 1-12. Draw a Rectangle with PA**

Some graphics are drawn more effectively with the PR command, especially when the same object appears in more than one position on the display. Use PA to position the object on the display, then use PR to draw the object. The following example draws the same rectangle as before, this time using PR.

EXAMPLE 1-67. Draw a rectangle using the PR command.

(Initialize spectrum analyzer and clear the display.)

```
100 OUTPUT 718;"PU;PA 0,0;PD;"
110 OUTPUT 718;"PR 300,0,0,200,-300,0,0,-200;"
```

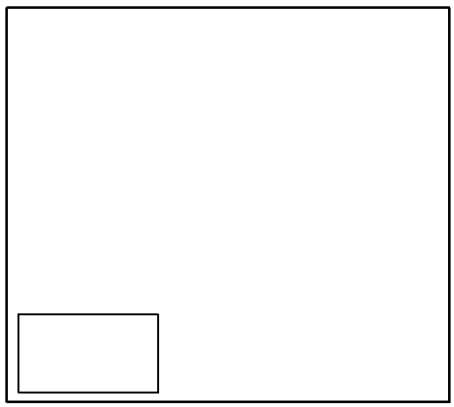

**Figure 1-13. Draw a Rectangle with PR**

The next example shows one way to move the rectangle to different positions on the display.

EXAMPLE 1-68. Draw three rectangles.

(Initialize spectrum analyzer and clear the display.)

```
100 OUTPUT 718;"PU;PA 0,0;PD;"                    Position pen.
110 OUTPUT 718;"PR 300,0,0,200,-300,0,0,-200;"    Draw rectangle.
120 OUTPUT 718;"PU;PA 300,300;PD;"                Position pen.
130 OUTPUT 718;"PR 300,0,0,200,-300,0,0,-200;"    Draw rectangle.
140 OUTPUT 718;"PU;PA 600,600;PD;"                Position pen.
150 OUTPUT 718;"PR 300,0,0,200,-300,0,0,-200;"    Draw rectangle.
```

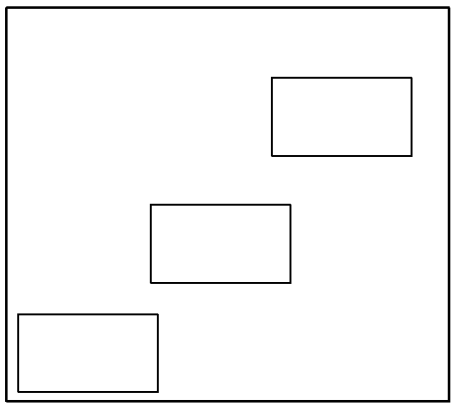

**Figure 1-14. Draw Three Rectangles**

The spectrum analyzer draws different types of lines, which are specified by the line-type command, LINET. Once the line type is specified, all subsequent lines are drawn with that type.

EXAMPLE 1-69. Draw rectangles with different line types.

(Initialize spectrum analyzer and clear display.)

```
100 FOR N=0 TO 750 STEP 150                       Repeat lines 110 through 140 for
                                                  six values of N: 0,150,300,450,600,
                                                  and 750.
110 L=L+1                                         Increase L by one.
120 OUTPUT 718;"LINET ";L;";"                     Select line type.
130 OUTPUT 718;"PU;PA ",N,N;";PD;"                Position pen.
140 OUTPUT 718;"PR 300,0,0,200,-300,0,0,-200;"    Draw rectangle.
150 NEXT N
```

The number of X-Y coordinates that can follow pen-positioning commands, like PA, is limited only by the memory in the display.

## Scale

Graphics are drawn in the spectrum analyzer window on the display, usually 800 dots wide by 384 dots high. Most graphics are drawn between the lower-left position, $P_1$, and the upper right position, $P_2$, when the spectrum analyzer has been assigned the full screen as shown in the following figure. $P_1$ is located at the left edge of the graticule, just above the data line. $P_2$ is located at the right edge of the graticule at the top of the display.

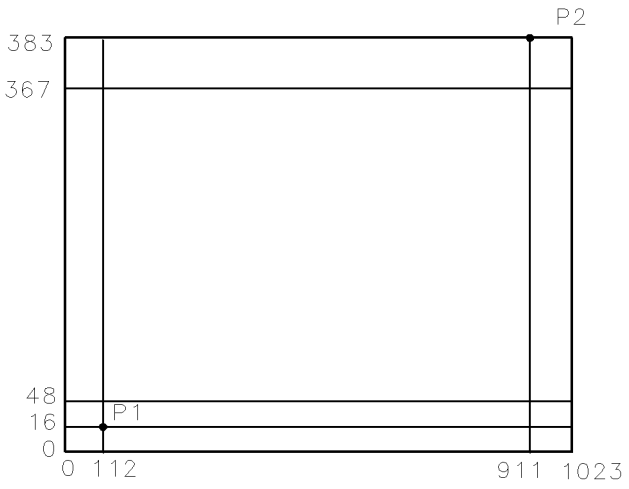


**Figure 1-15. Default Positions for $P_1$ and $P_2$**

The scale of the coordinates that $P_1$ and $P_2$ define has a preset value of 0,0 and 1000,1000 (Figure 1-16). Most graphics commands position the pen according to the scale between $P_1$ and $P_2$. Graphics can be drawn outside the window, but this is not recommended.

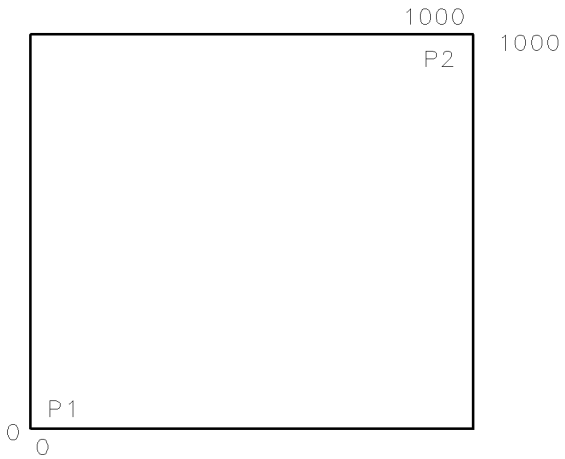


**Figure 1-16. Default Scale for $P_1$ and $P_2$**

The scale for $P_1$ and $P_2$ may be changed from its preset value (Figure 1-16) to any values between −32,768 and +32,767. Below, SCALE changes the X and Y coordinates to new terms in decibel and degree units to illustrate an antenna pattern adjustment.

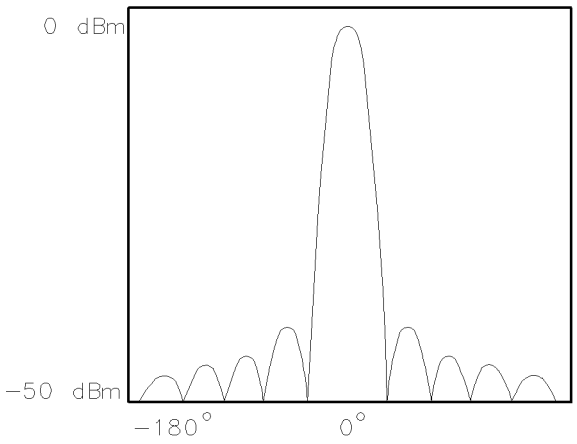


**Figure 1-17. Set Scale in Terms of Degrees and Decibels**

The SCALE command defines X-Y coordinates in integer values only. When redefining the scale, use numbers large enough to give adequate resolution. Units greater than 50 are recommended. The `build window` keys also change the scale of $P_1$ and $P_2$.

The commands listed in Table 1-15 draw on the display according to the units set by SCALE.

**Table 1-15. Commands Affected by the SCALE Command**

| Command | Description |
|---|---|
| DSPLY | Display variable |
| GRAPH | Graph trace |
| GRID | Display grid |
| MK | Display marker |
| OR | Set origin |
| PA | Plot absolute value |
| PR | Plot relative value |
| TEXT | Display text |

## Positioning Graphics with the Origin Command

The OR command offsets the position of graphics on the display relative to $P_1$, in the current scale units. The programs below draw a box. In the first example, the box is drawn without any offset. In the second, the box is offset 500 units in the X and Y directions.

EXAMPLE 1-70. Draw box without offset.

```
120 OUTPUT 718;"PU;PA 0,0;PD;"                    Place pen down at 0,0.
130 OUTPUT 718;"PA 0,400,400,400,400,0,0,0;"      Draw to coordinates X1, Y1, X2, Y2,
                                                  X3, Y3, X4, Y4.
```

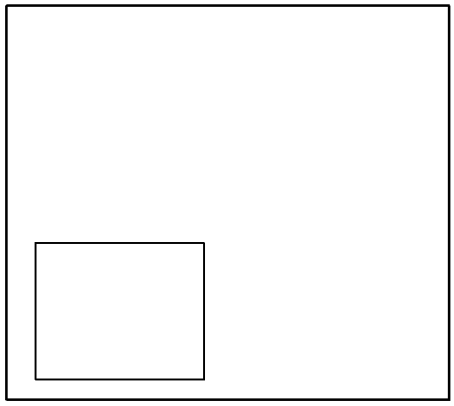

**Figure 1-18. Draw Box Without Offset**

EXAMPLE 1-71. Draw box with offset.

```
120 OUTPUT 718;"OR 500,500;"                      Offset origin.
130 OUTPUT 718;"PU;PA 0,0;PD;"                    Draw box.
140 OUTPUT 718;"PA 0,400,400,400,400,0,0,0;"
```

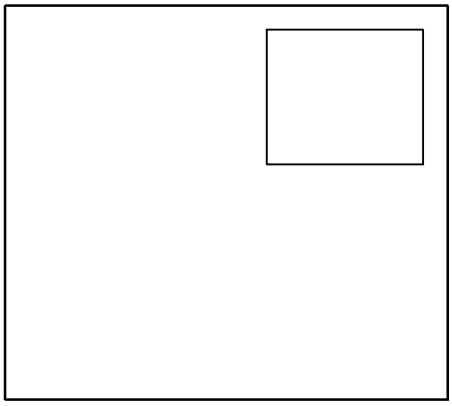

**Figure 1-19. Draw Box With Offset**

The OR command also repositions items and windows, which are described later in this section.

## Writing Text

Messages may be written with the TITLE and TEXT commands.

The TITLE command is the easiest way to write text. TITLE automatically places the pen down and positions text in the **title line**, located at the top of the display.

The following example writes a message. Delimiters ($) mark the beginning and end of the message and must be different from any characters in the message. (See Table 2-2 for additional delimiters.)

EXAMPLE 1-72. Write text in the title line. (See Figure 1-20.)

```
10 OUTPUT 718;"IP;SNGLS;TS;"
20 OUTPUT 718;"TITLE $YOUR MESSAGE HERE$;"
```

To erase the title, execute `IP` or `TITLE$$`. Executing `CLRDSP` does not erase the title line.

The TEXT command places messages (up to 35 characters) anywhere on the display. Use PA to position the pen, then use PD to place the pen down. (TEXT does not work after `DWINDOW ON` is executed.)

EXAMPLE 1-73. Write text at the current pen position.

```
10 CLEAR 718
20 OUTPUT 718;"IP;SNGLS;TS;TRDSP TRA,OFF;"
30 OUTPUT 718;"PU;PA 400,700;"                Position pen.
40 OUTPUT 718;"PD;"                           Place pen down.
50 OUTPUT 718;"TEXT$YOUR MESSAGE HERE$;"      Print text.
```

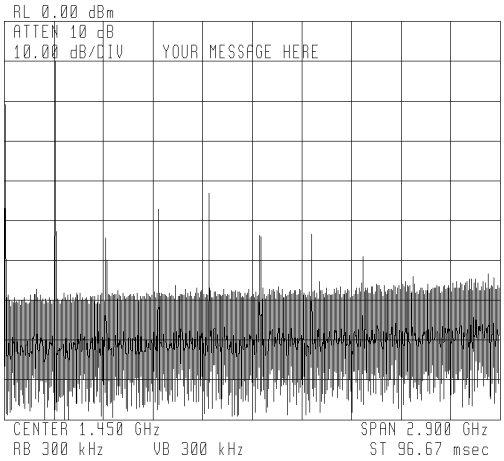


**Figure 1-20. Write Text in the Title Line**

To erase the text, execute CLRDSP or assign the text to an **item** and blank the item. (See "Items" at the end of this section.)

## Displaying Variables

Variables are displayed by using the display-variable command, DSPLY. DSPLY specifies the field width (number of characters) and decimal places of the displayed variable. When specifying the field width, be sure to account for the greatest number of characters that will be printed, including the sign and decimal point.

DSPLY places the variable at the current pen position. The next example uses DSPLY and TEXT to write the value of the computer variable, Freq.

EXAMPLE 1-74. Write the value of a computer variable on the display.

```
10 CLEAR 718
20 OUTPUT 718;"IP;SNGLS;TS;TRDSP TRA,OFF"
30 Freq=123
40 OUTPUT 718;"PU;PA 400,700;PD;"
50 OUTPUT 718;"TEXT$The frequency is: $;"
60 OUTPUT 718;"DSPLY ";Freq;",7,1;"
70 OUTPUT 718;"TEXT @MHz@;"
```

To stop the display of the variable, execute CLRDSP.

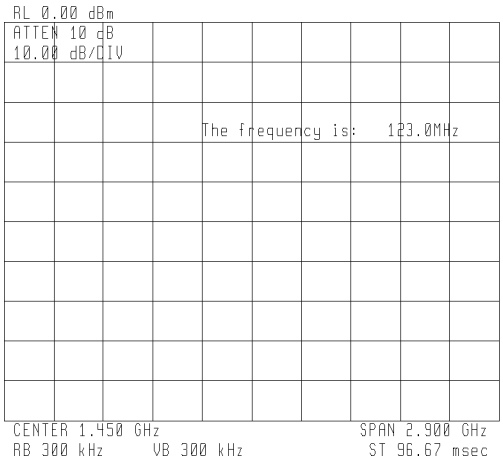


**Figure 1-21. Display a Computer Variable**

## Drawing Grids

The GRID command draws a grid anywhere on the display. GRID specifies the size and number of squares forming the grid. Use the PA command to position the lower-left corner of the grid. LINET and PEN may be used to modify the grid lines. The following example places a five-division-by-four-division grid in the upper right quadrant of the display. (GRID does not work after `DWINDOW ON` is executed.)

EXAMPLE 1-75. Draw a grid.

(Initialize spectrum analyzer and clear the display.)

```
100 OUTPUT 718;"PU;PA 500,500;PD;"    Position pen at center of display.
110 OUTPUT 718;"GRID 100,125,5,4;"    Draw 5 by 4 division grid.
```

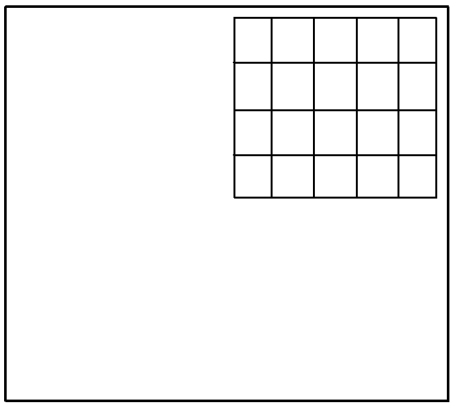

**Figure 1-22. Draw a Grid**

## Using Instrument Windows to Reduce the Display Area for Measurement Results

The IWINDOW (instrument window) command increases or decreases the area on the screen where spectrum analyzer measurement results are displayed. Use IWINDOW to reduce the size of the graticule, leaving more room for messages and other graphics at the sides of the display screen.

The following program creates a message area at the top of the display, then measures the input signal and describes measurement results at the top of the display.

EXAMPLE 1-76. Use an instrument window to reduce the size of displayed measurement results. (Connect calibrator signal to spectrum analyzer input.)

```
20 CLEAR 718;                                  Initialize spectrum analyzer.
30 OUTPUT 718;"IP;SNGLS;TS;ANNOT OFF;"
40 OUTPUT 718;"SP 1MHZ;"                       Set span.
50 !
60 OUTPUT 718;"IWINDOW 1000,800;"              Reduce display area for measure-
                                               ment results.
70 OUTPUT 718;"PU;PA 0,955;PD;"                Position pen.
80 OUTPUT 718;"TEXT$SIGNALS FOUND:$;"          Write text.
90 !
100 FOR N=1 TO 3
110 OUTPUT 718;"CF ";(N*300);"MHZ;TS;"         Set center frequency. Sweep trace A.
120 OUTPUT 718;"MKPK HI;"                      Mark highest signal level.
130 OUTPUT 718;"PU;PA 20,";(955-N*45);";PD;"   Position pen.
140 OUTPUT 718;"DSPLY ";N;",3,0;"              Label signal.
150 OUTPUT 718;"TEXT $AMPLITUDE = $;"
160 OUTPUT 718;"DSPLY MKA,6,1;"                Print amplitude.
170 OUTPUT 718;"TEXT$ dBm$;"
180 NEXT N
```

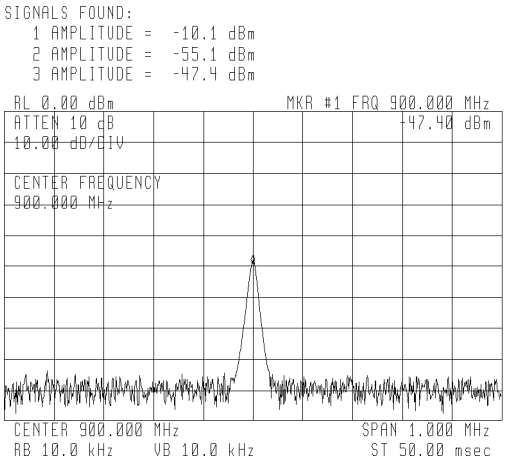


**Figure 1-23. Reduce Display Size of Measurement Results**

## Using Graphics Windows to Resize the Coordinate System

So far, we have examined graphics drawn on one scale that occupies the entire display. The DWINDOW command magnifies or reduces a coordinate system. This new coordinate system is called a **graphics window**, and may be used for viewing resized measurement results or graphics.

DWINDOW first specifies the physical size of the window in the current scale units. (As before, current scale units are either default values of 0 to 1000 for X and Y coordinates, or are specified by the SCALE command.) DWINDOW then defines a scale for the new coordinate system *within* the window.

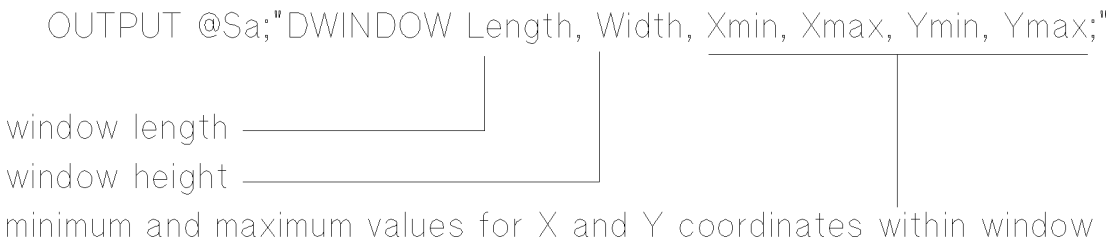


For example, the next program draws a box on the default coordinate system. Each side of the box has a length of 1000, and outlines the limits of the default coordinate system.

EXAMPLE 1-77. Draw box.

```
120 OUTPUT 718;"PU;PA 0,0;PD;"                    Draw box.
130 OUTPUT 718;"PA 0,1000,1000,1000,1000,0,0,0;"
```

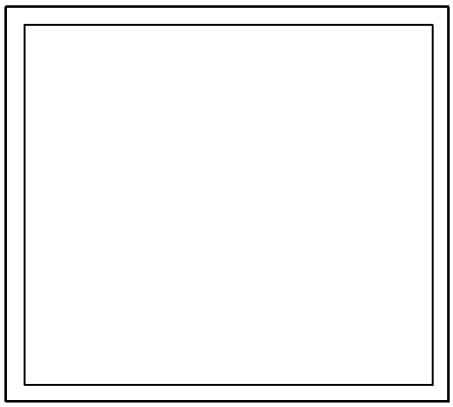

**Figure 1-24. Draw Box**

In the next program, DWINDOW orients the box in a new coordinate system, or "window." The window dimensions are 400 by 400 (current scale units) and the window $X_1$ – $Y_1$ coordinates have units from 0 to 1000. Since the sides of the box are still 1000 units long, it outlines the limits of the window.

EXAMPLE 1-78. Create a graphics window, then draw a box within the window.

```
120 OUTPUT 718;"DWINDOW 400,400,0,1000,0,1000;"    Define window size and scale.
130 OUTPUT 718;"PU;PA 0,0;PD;"                     Draw box.
140 OUTPUT 718;"PA 0,1000,1000,1000,1000,0,0,0;"
```

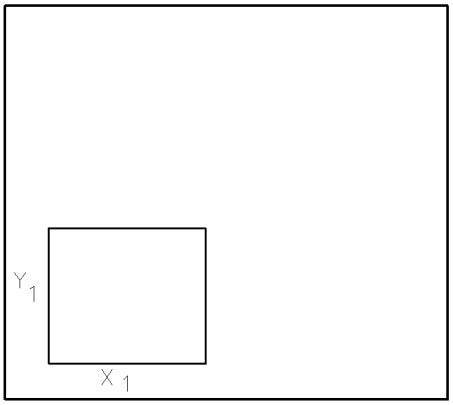


**Figure 1-25. Create a Graphics Window**

The window scale may be changed to enlarge or reduce graphics within it. Below, the same box is drawn in a window where the $X_1$ – $Y_1$ coordinates are twice as long as before. Thus, the box is half as large.

EXAMPLE 1-79. Change window scale.

```
120 OUTPUT 718;"DWINDOW 400,400,0, 2000, 0, 2000;"    Change window scale.
130 OUTPUT 718;"PU;PA 0,0;PD;"                        Draw box.
140 OUTPUT 718;"PA 0,1000,1000,1000,1000,0,0,0;"
```

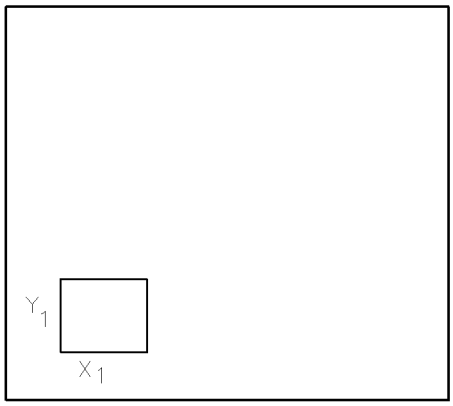


**Figure 1-26. Change Graphics Window Scale**

Use OR to position the window anywhere on the display. The OR command offsets coordinates of the window in the current scale units, as defined by the SCALE command.

EXAMPLE 1-80. Offset graphics window position.

```
120 OUTPUT 718;"DWINDOW 400,400,0,2000,0,2000;"    Define window size.
130 OUTPUT 718;"OR 500,500;"                       Offset window position.
140 OUTPUT 718;"PU;PA 0,0;PD;"                     Draw box.
150 OUTPUT 718;"PA 0,1000,1000,1000,1000,0,0,0;"
```

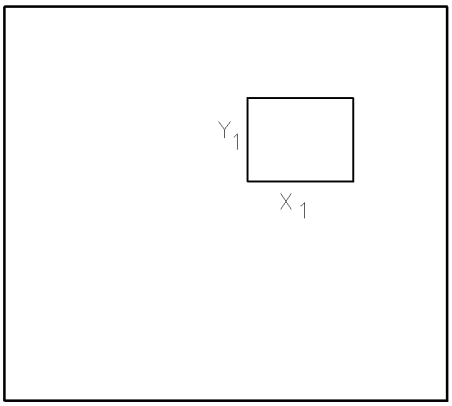


**Figure 1-27. Offset Window Position**

DWINDOW is especially useful for displaying traces. When traces are displayed, the window scale is set by the trace conditions:

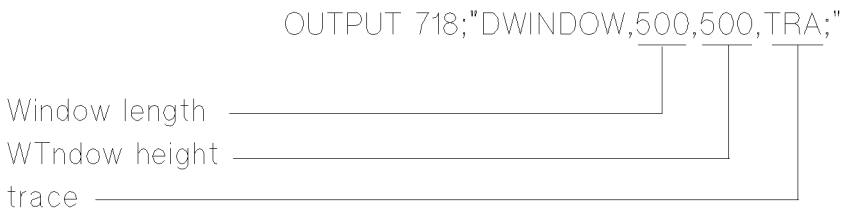


Trace A is reproduced below in a window.

EXAMPLE 1-81. Draw trace within a graphics window.

```
140 OUTPUT 718;"DWINDOW 400,400,0,1000,0,1000;"    Draw box to outline trace.
150 OUTPUT 718;"PU;PA 0,0;PD;"
160 OUTPUT 718;"PA 0,1000,1000,1000,1000,0,0,0;"
170 OUTPUT 718; "DWINDOW 400,400,TRA;"             Define window size and contents.
180 OUTPUT 718; "GRAPH TRA;"                       Display trace A.
```

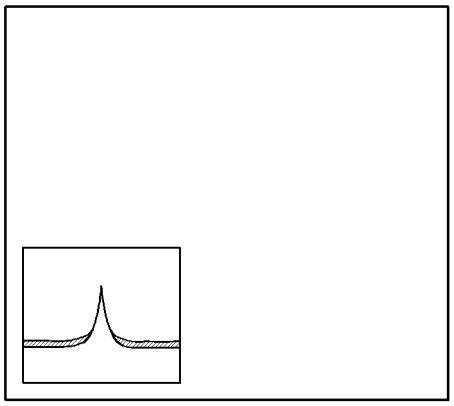

**Figure 1-28. Display Trace Data within a Graphics Window**

EXAMPLE 1-82. Turn off graphics window.

```
10 OUTPUT 718;"DWINDOW OFF;"
```

## Items

The item command, IT, activates the reference-graphics mode by assigning a number from 1 to 50 to a series of graphics commands. Executing `IT 0`, `IP`, `DELETE`, or `CLRDSP` turns off the reference-graphics mode.

During the reference-graphics mode, graphics, called **item**s, can be redrawn or modified without reexecuting the individual graphics commands. This is useful when a graphics item needs to be blanked and redrawn, changed, recolored, or repositioned at a later time.

In the previous examples, graphics are positioned with the PA and PR commands and they are drawn by placing the command down with the PD command. The reference-graphics mode differs by positioning graphics with the OR command without the use of the PU or PD commands. Their shape, color, and appearance (or disappearance) is further modified by a variety of commands.

For example, consider the following example that draws a grid:

```
100 OUTPUT 718;"PU;PA 500,500;PD;"
110 OUTPUT 718;"GRID 100,125,5,4;"
```

During the reference-graphics mode, the grid is positioned with OR and PD is not needed:

```
110 OUTPUT 718;"IT 1;OR 500,500;"
110 OUTPUT 718;"GRID 100,125,5,4;"
```

The reference-graphics mode involves these steps:

1. Create a graphics **item** using the IT command, specifying an item number from 1 to 50. Create as many items as you need.
2. To display an item, first activate it with the IT command, then modify it with one of the item-modifying commands (Table 1-16).

The details of this process are described in the following text.

### Assigning Item Numbers

Use the IT command to assign item numbers. Once assigned, an item is displayed automatically.

EXAMPLE 1-83. Assign item numbers to a triangle and box.

```
120 OUTPUT 718;"IT 1;"                              Assign box item number 1.
130 OUTPUT 718;"PA 0,0,0,400,400,400,400,0,0,0;"    Draw box.
140 OUTPUT 718;"IT 2;"                              Assign triangle item number 2.
150 OUTPUT 718;"PA 600,0,700,200,800,0,600,0;"      Draw triangle.
```

In the reference-graphics mode, each item has its own pen, which is automatically in the down position. Thus, a pen-down command (PD) is not required. Items 1 and 2 are shown below.

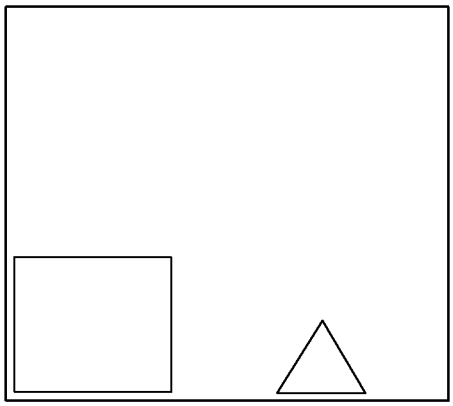

**Figure 1-29. Display Two Items, a Box and a Triangle**

## Activating and Modifying Items

An item can be redrawn or modified whenever it is active. Only one item can be active at a time. The active item is determined by the last executed IT command. These are the commands that modify items:

**Table 1-16. Commands that Modify Items**

| Command | Description |
|---|---|
| VW OFF (view item off) | Blank item. |
| VW ON (view item on) | Redraw item. |
| OR (origin) | Offset item position. |
| TP (tablet pointer) | Change item shape. |
| DELETE (delete item) | Stop display of item and delete from memory. |

Below, item 1 is activated, blanked, and then redrawn. Notice that it is not necessary to execute the PD command or reexecute the individual graphics commands assigned to the item.

EXAMPLE 1-84. Blank and redraw item.

```
160 OUTPUT 718;"IT 1;"      Activate item.
170 OUTPUT 718;"VW OFF;"    Blank item.
180 OUTPUT 718;"WAIT 5;"    Pause program to view display.
190 OUTPUT 718;"VW ON;"     Redraw item.
```

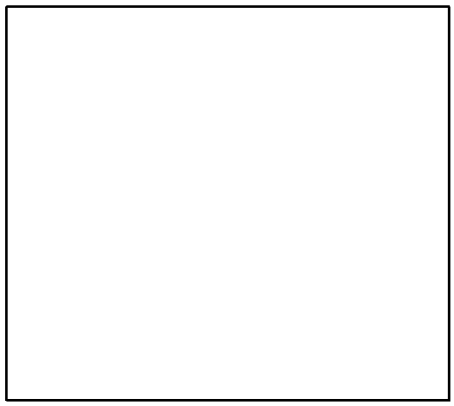

**Figure 1-30. Blank Item**

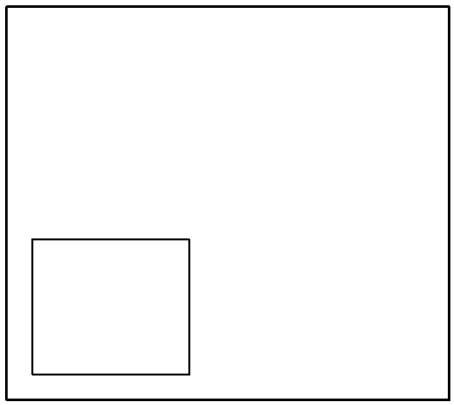

**Figure 1-31. Display Stored Item**

EXAMPLE 1-85. Offset item.

```
160 OUTPUT 718;"IT 1;"          Activate item 1.
170 OUTPUT 718;"OR 500,500;"    Offset item 1.
```

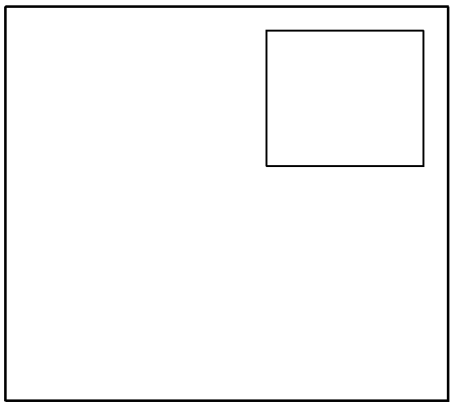

**Figure 1-32. Offset Item Position**

During the reference-graphics mode, the pen starts at the item origin when the item is first drawn. The origin of the item is 0,0 unless specified otherwise with the OR command. If the origin is changed, the entire item moves. Notice that when the reference-graphics mode is off (`IT 0`), graphics are always drawn at the current pen position and can never be moved.

The TP (tablet pointer) command modifies item shapes. The TP command may be thought of as a tablet pointer that selects one of the X-Y coordinates of a graphics item for modification. For example, consider item 2, the triangle, which is defined by four coordinates, numbered 0 through 3:

| Point 0 | Point 1 | Point 2 | Point 3 |
|---|---|---|---|
| (600,0) | (700,200) | (800,0) | (600,0) |

Executing `TP 1` selects (700,200) for modification. (TP begins counting with zero.) The new coordinate is specified with the plot absolute command, PA, that follows the TP command. In the program below, point 1 of the triangle is modified.

EXAMPLE 1-86. Modify item shape.

```
160 OUTPUT 718;"IT 2;"          Activate item.
170 OUTPUT 718;"TP 1;"          Select point.
180 OUTPUT 718;"PA 300,600;"    Specify new point value.
```

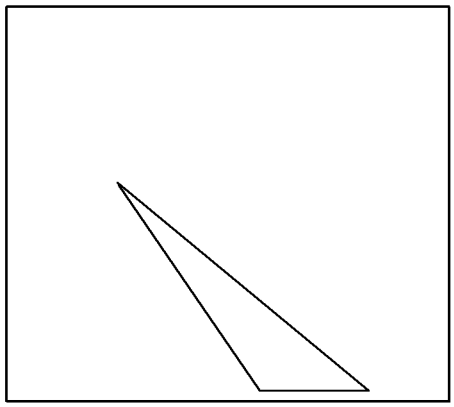

**Figure 1-33. Modify Shape of Item**

Any modification made with OR, VW, or TP become permanent characteristics of the item unless the item is remodified or deleted with the DELETE or CLRDSP command.

### Deleting Items

The DELETE command blanks the *active* item and clears it from memory. The CLRDSP command blanks and deletes *all* items, regardless of their state.

EXAMPLE 1-87. Delete item.

```
160 OUTPUT 718;"IT 1;"      Activate item.
170 OUTPUT 718;"DELETE;     Delete item.
```

EXAMPLE 1-88. Delete all items.

```
400 OUTPUT 718;"CLRDSP;"    Delete all items.
```

### Item Types

In addition to point-by-point drawing, items can be used to display text, grids, or markers. The commands associated with these tasks are divided into groups listed in Table 1-17.

**Table 1-17.**
**Commands that can be Assigned to Items with the IT Command.**

| Task | Description |
|---|---|
| Plot absolute, point-by-point drawing | PA |
| Plot-relative, point-by-point drawing | PR |
| Display trace data | GRAPH |
| Draw grid | GRID |
| Display text | TEXT,DSPLY |
| Display graphics marker | MK |

A single item can be assigned to do only one task. For example, a single item cannot draw a box and display text. In this case, two items are required: one for the box, another for the text. Mixing item types generates a display error, indicated by "E" in the display status box.

## Printing and Plotting the Contents of the Display

The PLOT command reproduces the display on a plotter or graphics printer, depending on the setting of `COPY IS`, which is accessed with the (DISPLAY) key. See the operation manual for the HP 70004A color display, HP 70205A graphics display, or HP 70206A system graphics display.

# 2

# Language Reference

This chapter provides information about each remote programming command available to the HP 70900B local oscillator source. The commands have been documented in alphabetical order, and each command has its own "manual page". Each manual page contains a remote programming mnemonic followed by an English interpretation of what the mnemonic stands for. The rest of the manual page explains the syntax, describes the range, any restrictions, interdependent commands, or preset states. It may also give a simple example using the remote command and further details about the inner workings of the command.

## Syntax Diagrams

This section explains syntax diagram elements, definitions of separators, terminators, and commonly-used arguments for remote programming commands.

Command syntax is represented pictorially. (Refer to Figure 2-1.) Words enclosed by a rectangle are names of elements defined in Table 2-1. Characters enclosed by an oval are commands and their arguments and must be entered *exactly as shown*. Characters enclosed by a circle are separators or terminators and must be entered *as shown*.

Table 2-2 describes separators and terminators and defines commonly used arguments.

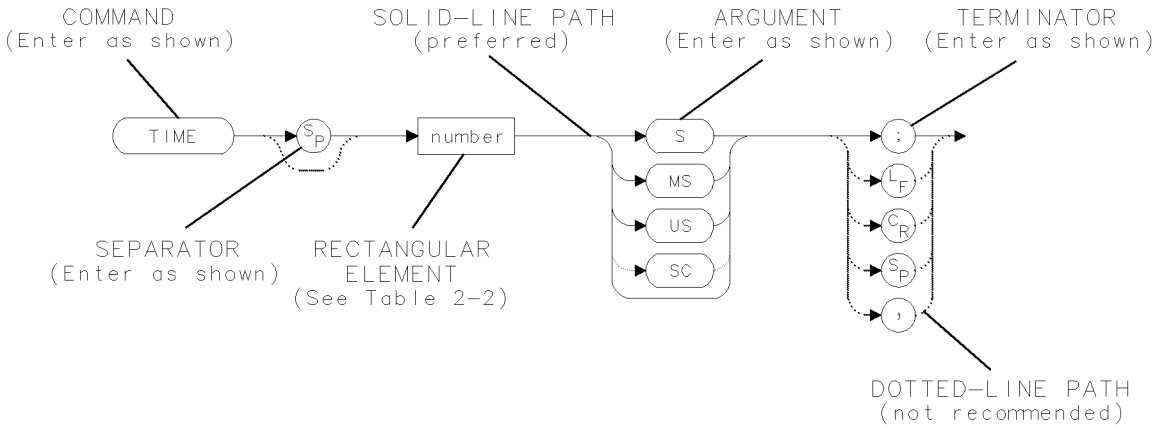


**Figure 2-1. Syntax-Diagram Elements**

Syntax-diagram elements are connected by solid and dotted lines. Any combination of elements generated by following the lines in the proper direction is correct syntactically. *Solid-line paths are recommended.* Dotted-line paths are provided only for compatibility with previously written programs for the HP 8566A spectrum analyzer, HP 8566B spectrum analyzer, HP 8568A spectrum analyzer, and HP 8568B spectrum analyzer.

## Syntax Diagram Tables

The table under each syntax diagram provides specific command parameter information pertinent only to that command. Some of the more common parameter types are described below.

| | |
|---|---|
| **Range** | describes the minimum and maximum values of a command function. |
| **Requirements** | describe procedures or equipment required for command operation. |
| **Restrictions** | describe limitations of command operation. |
| **Preset state** | describes the default condition activated by the IP command. |
| **Interdependent commands** | are other commands that affect—or are affected by—the operation of the particular command. |

**Table 2-1. Rectangular Syntax Elements**

| Syntax Component | Definition/Range |
|---|---|
| *analyzer command* | Any spectrum analyzer command in this chapter, with required parameters and terminators. |
| *character* | $S_P$ * - < = > @ ^ { \| } ~ ! " # $ % & ' ( ) + , . / 0 1 2 3 4 5 6 7 8 9 : ; A B C D E F G H I J K L M N O P Q R S T U V W X Y Z [ \ ] ? ‘ \| a b c d e f g h i j k l m n o p q r s t u v w x y z _ |
| *compatible function* | Any spectrum analyzer command in this chapter that operates on other functions, that is, contains *predefined function* in its syntax diagram. (See *predefined function* in this table.) |
| *data byte* | 8-bit byte containing numeric or character data. |
| *data byte & EOI* | 8-bit byte containing numeric or character data sent with end-or-identify (EOI) condition, where the EOI control line on HP-IB is asserted to indicate the end of the transmission. |
| *delimiter* | ~ \| \ @ = < > / ^ $ % ! ' ' : " & Matching characters that mark the beginning and end of a character string, or a list of user-defined functions or analyzer commands. To avoid misinterpretation, choose delimiting characters that are not also within the string they delimit. |
| *digit* | 0 1 2 3 4 5 6 7 8 9 |
| *lsb length* | Represents the least significant byte of a two-byte word that describes the number of bytes returned or transmitted. See *msb length*. |
| *msb length* | Represents the most significant byte of a two-byte word that describes the number of bytes returned or transmitted. See *lsb length*. |
| *number* | Expressed as integer, decimal, or in exponential (E) form. Real Number Range: $\pm$ 1.797,693,134,862,315 $\times 10^{308}$, including 0.<br>Up to 15 significant figures allowed.<br>Numbers may be as small as $\pm$ 2.225,073,858,507,202 $\times 10^{-308}$<br>Integer Number Range: -32,768 through +32,767 |
| *output termination* | Line feed ($L_F$) with end-or-identify (EOI) condition. ASCII code 10 (line feed) is sent via HP-IB, with the end-or-identify control line on HP-IB set to indicate the end of the transmission. |
| *predefined function* | AMPU, FREQU, IDFREQ, MEASU, MEM, MKBW, PEAKS, POSU, PWRBW, RMS, STB, STDEV, SUM, SUMSQR, VARIANCE. A *predefined function* is an *analyzer command* that returns a number that can be operated on by other commands called *compatible functions*. Insert a *predefined function* into a command statement where *predefined function* appears in the command syntax chart. (See *compatible function* in this table.) |

**Table 2-1. Rectangular Syntax Elements (continued)**

| Syntax Component | Definition/Range |
|---|---|
| *predefined variable* | The values of the following variables change depending on the current instrument settings. Each variable represents the value of the command function that has the same name as the variable. AT CALPWR CF CNVLOSS DL FA FA FB FB FOFFSET HNLOCK INPUT INZ LG LOSTART LOSTOP MBIAS MBMAX MBMIN MBRES MKA MKACT MKAL MKAR MKF MKN MKP MKPAUSE MKPX MKT MKTV ML NSTART NSTATE NSTOP PINPUT RB RBR RL RLPOS ROFFSET SIGDEL SP SS ST TH VB VBR VTL |
| *trace element* | Value contained in one trace point. Notated as TRA[N] where N specifies the point position in the trace array. Values for N are 1 to 1024, or 1 to the length specified by TRDEF, whichever is less. Same for trace B (TRB[N]), trace C (TRC[N]), and user-defined traces (LABEL[N]). |
| *trace range* | Values contained in trace segment. Multi-point segments are notated as TRA[N,M], where N and M are end points of a segment and specify point positions in trace array. Values for N or M are 1 to 1024, or 1 to the length specified by TRDEF, whichever is less. Same for trace B (TRB[N,M]), trace C (TRC[N,M]), and user-defined traces (LABEL[N,M]). Single-point segments are notated same as *trace element* above. |
| *units* | Represent standard scientific units.<br>Frequency Units: HZ, KHZ, MHZ, GHZ, KZ, MZ, GZ<br>Amplitude Units: DB, DBM, DBMV, DBUV, MV, UV, V, MW, UW, W, DM<br>Time Units: S, MS, US, SC<br>Current Units: A, MA, UA<br>Impedance Units: OHM<br>KZ, MZ, GZ, DM, and SC are not recommended, but are provided for compatibility with the HP 8566A spectrum analyzer, 8566B, 8568A, and 8568B spectrum analyzers. |
| *user-defined function* | A label 1 to 12 characters long that is defined by the FUNCDEF or ACTDEF command. Choice of characters is A – Z, 0 – 9, and the underscore (_). First character must be a letter. Numbers must be preceded by the underscore. |
| *user-defined trace* | A label 1 to 12 characters long that is defined by the TRDEF command. Choice of characters is A – Z, 0 – 9, and the underscore(_). First character must be a letter. Numbers must be preceded by the underscore. |
| *user-defined variable* | A label 1 to 12 characters long that is defined by the VARDEF or ACTDEF command. Choice of characters is A – Z, 0 – 9, and the underscore(_). First character must be a letter. Numbers must be preceded by the underscore. |
| *value* | See expanded diagram in syntax diagram. |

**Table 2-2. Separators, Terminators, and Commonly Used Arguments**

| Item | Description |
|---|---|
| , | Comma. ASCII-decimal number 44. |
| ; | Semicolon. ASCII-decimal number 59. |
| $S_P$ | Space. ASCII-decimal number 32. |
| $C_R$ | Carriage return. ASCII-decimal number 13. |
| $L_F$ | Line feed. ASCII-decimal number 10. |
| DN | Down. Change function value by step increment. Simulates press of ▼ key. |
| UP | Up. Change function value by step increment. Simulates press of ▲ key. |
| EP | Enter parameter. Suspend program operation until number is entered with front panel controls (step keys, knob, or numeric keypad.) Pressing `ACCEPT VALUE` enters the number and resumes program operation. |
| ? | Query. Returns current value of function to computer. |
| OA | Output active. Not recommended. Provided for backwards compatibility with the HP 8566A spectrum analyzer and HP 8568B spectrum analyzers. |
| TRA | Select trace A for operation. |
| TRB | Select trace B for operation. |
| TRC | Select trace C for operation. |

# ABORT

ABORT

Interrupt operation of all user-defined functions.

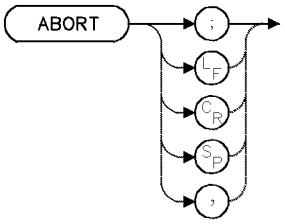


| Item | Description |
|---|---|
| Interdependent Commands | ACTDEF, FUNCDEF, REPEAT/UNTIL, IF/THEN |

## Example

Use ABORT to interrupt operation of a repeat loop.

```
120 CLEAR 718                                    Initialize analyzer.
130 OUTPUT 718;"IP;"
140 OUTPUT 718;"VARDEF KEY,0;"                   Define a variable for storing the number of the key that was last pressed.
150 OUTPUT 718;"REPEAT;";                        Begin repeat loop.
160 OUTPUT 718;"READMENU KEY,";                  Store the number of the pressed key in the user-defined variable, KEY. The keys are defined in the next program lines.
170 OUTPUT 718;"1,%VIEW CAL %,";                 VIEW CAL is key number1.
180 OUTPUT 718;"2,%EXPAND RANGE%,";              EXPAND RANGE is key number 2.
190 OUTPUT 718;"14,%EXIT %;";                    EXIT is key number 14.
200 OUTPUT 718;"IF KEY,EQ,1;";                   If KEY equals 1, set measurement range to measure the calibrator signal.
210 OUTPUT 718;"THEN;CF 300MHZ;SP 1MHZ;";
220 OUTPUT 718;"ELSIF KEY,EQ,2;";                If KEY equals 2, increase the measurement range.
230 OUTPUT 718;"THEN;CF 550MHZ;SP 900MHZ;";
240 OUTPUT 718;"ELSIF KEY,EQ,14;";               If KEY equals 14, then stop repeating lines 150 – 280, and go to line 290 (ABORT).
250 OUTPUT 718;"THEN;ABORT;";
260 OUTPUT 718;"ENDIF;";
```

```
270 OUTPUT 718;"PA 500,500;";
280 OUTPUT 718;"UNTIL 1,EQ,0;";                    End repeat-loop definition.
290 OUTPUT 718;"TRDSP TRA,OFF;"                    Turn off trace A.
300 OUTPUT 718;"TEXT @EXIT KEY ENDS REPEAT LOOP.@;"
```

The ABORT command stops the execution of a user-defined function.

If ABORT is encountered in a function that has been executed by pressing a key, the function is interrupted and front panel control is returned.

If the function is activated by a computer program, ABORT resumes program operation at the first analyzer command following the function. When, in addition, the function is nested within one or more user-defined functions, ABORT resumes program operation at the first analyzer command following *all* of the user-defined functions. Refer to Figure 2-2.

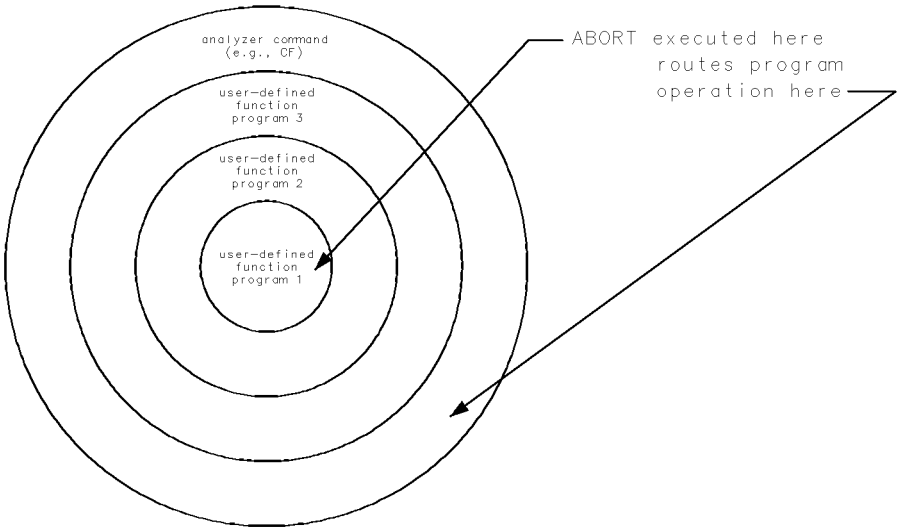


**Figure 2-2.**
**ABORT returns program operation to first predefined function that follows the user-defined function(s).**

The RETURN command also interrupts operation of a user-defined function, but instead returns operation to the point where the user-defined function was called.

ABORT also interrupts the operation of repeat loops. (See previous example.) For more program examples, see "Branching and Looping" under "Storing New Functions in the Spectrum Analyzer" in "Programming Fundamentals."

# ABS

ABSOLUTE

Store absolute value.

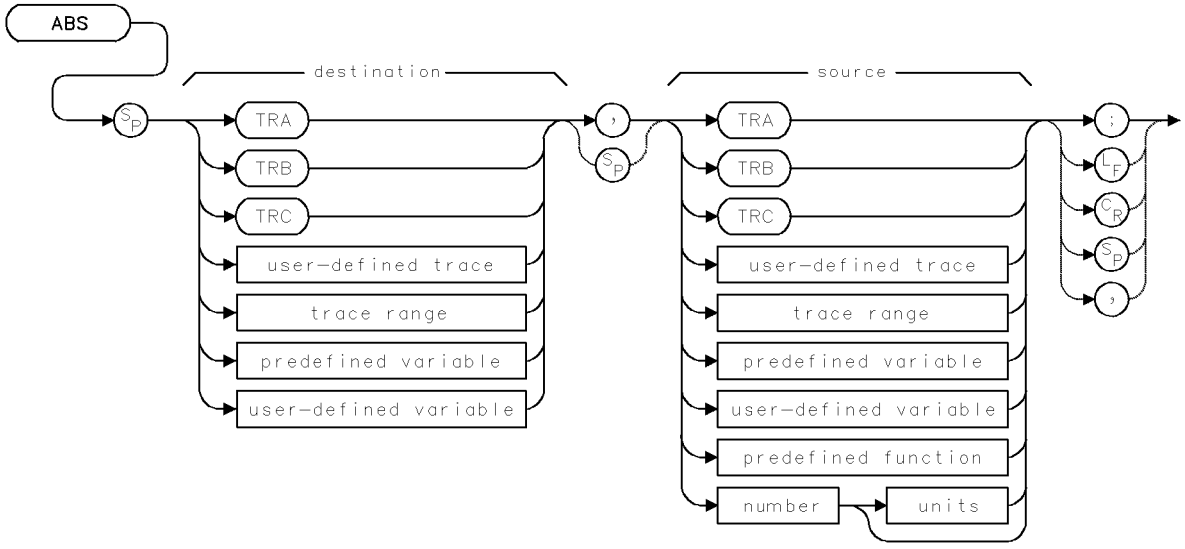


| Item | Description |
|---|---|
| Source or Destination Amplitude Range | 0 – 10,000 measurement units for linear trace data in *TRA*, *TRB*, *TRC*, *trace range*, or *user-defined trace*. –32,768 – +32,767 measurement units for logarithmic trace data in *TRA*, *TRB*, *TRC*, *trace range*, or *user-defined trace*. $\pm$ 1.8 $\times$ $10^{308}$ when using *number*, *predefined variable*, or *user-defined variable*. |
| Source-Length Range | 1 – 1024 position units. Default is 800 position units when using *TRA*, *TRB*, *TRC*. Truncated if longer than destination length. If shorter than destination length, last element is extended for operation. |
| Destination-Length Range | 1 – 1024 position units. |
| Requirements | Be sure data reflects one complete sweep when using *TRA*, *TRB*, *TRC*, or *trace range* for source. SNGLS and TS suggested. TRDEF required when using *user-defined trace*. VARDEF required when using *user-defined variable*. |

## Example

Place absolute value of a trace-element amplitude into a user-defined variable.

```
140 OUTPUT 718;"VARDEF NN,0;"        Define variable NN equal to 0.
150 OUTPUT 718;"ABS NN,TRA[2];"      Move absolute value of second element of trace A
                                     into NN.
```

The ABS command stores the absolute values of the source, point by point, in the destination.

# ACTDEF

ACTIVE FUNCTION

Give a user-defined function active status.

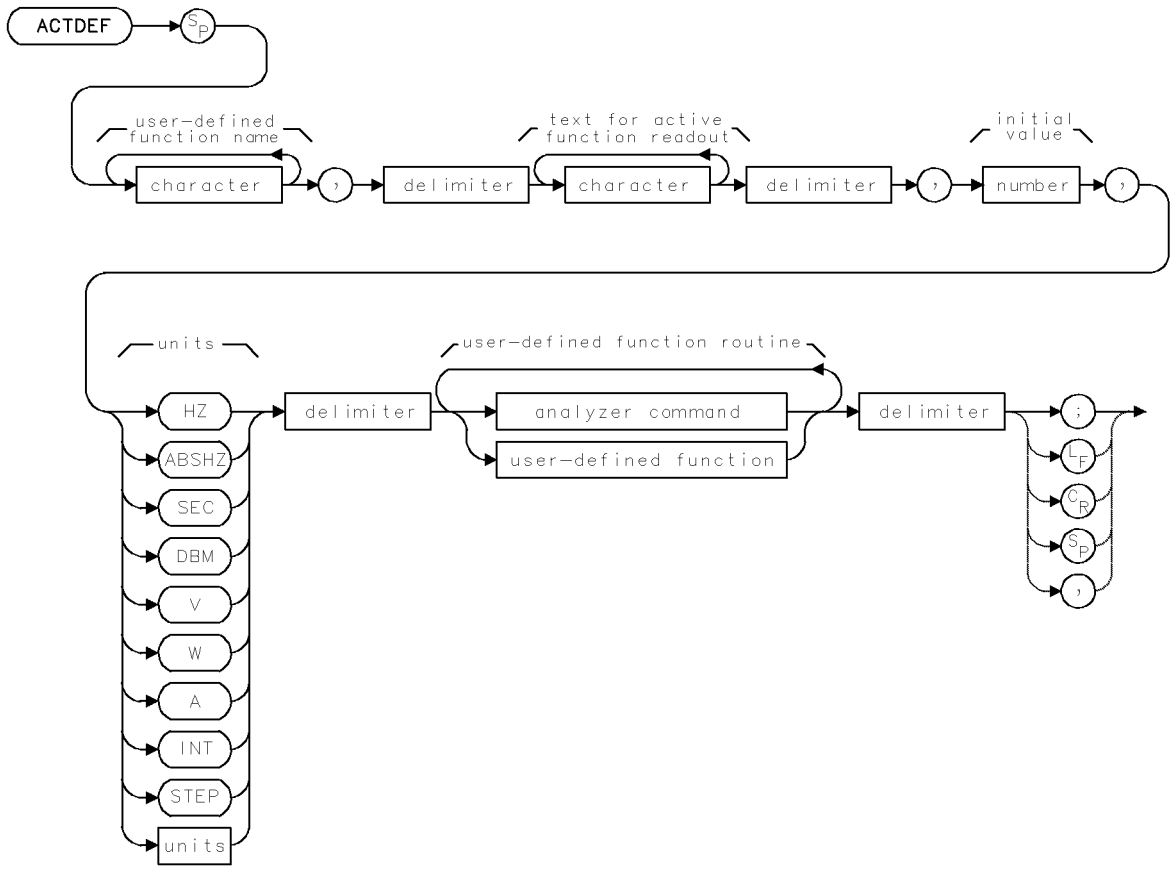


| Item | Description |
|---|---|
| Function-Name Range | 1 – 12 characters: A – Z, 0 – 9, and underscore (_). First character must be a letter. Numbers must be preceded by underscore. |
| Readout Range | As allowed by selected units. |
| Initial-Value Range | As allowed by selected units. |
| Requirements | Requires internal memory. See Appendix D for commands that consume memory. |
| Inter-Dependent Commands | DISPOSE, FORMAT, LOAD, PROTECT, RCLD, PURGE |

## Example

Create a user-defined function whose value can be changed with front panel controls or with math operations.

```
60 OUTPUT 718;"ACTDEF NEW_SPAN,10000000,HZ,";   Begin definition of active, user-
                                                defined function, called NEW_SPAN,
                                                that has an initial value of 10
                                                MHz.
70 OUTPUT 718;"@MPY SP,2,NEW_SPAN;@"            Multiply NEW_SPAN by 2, then
                                                set span equal to the product. End
                                                definition and store the function.
80 OUTPUT 718;"KEYDEF 3,NEW_SPAN;"              Assign function to a (USER) key.
90 OUTPUT 718;"VARDEF YY,0;"                    Create a user-defined variable, YY.
100 OUTPUT 718;"MOV YY,NEW_SPAN;"               Set variable equal to NEW_SPAN.
110 OUTPUT 718;"NEW_SPAN?"                      Return value of NEW_SPAN to computer.
120 ENTER 718;N                                 Assign value to computer variable.
```

The ACTDEF command stores in **internal memory** a user-defined function that operates like an active function. ACTDEF first consolidates a series of analyzer commands into one function, and then gives it a name. Executing the function name is the same as executing the series of commands contained in the function. (ACTDEF does *not* execute the function.)

In addition to creating a user-defined function, the ACTDEF command creates a temporary variable that has the same name as the user-defined function. The variable can be used for operations as you would use any **predefined variable**. The variable exists as long as the user-defined function is stored in internal memory.

The ACTDEF command is unique in that it makes the user-defined function act like an active function. Active functions have the following characteristics:

- Their current value is displayed in the active-function readout.
- Their value can be changed with front panel controls, provided the function is activated by a front panel key.
- Their value is expressed as a variable for operations with other spectrum analyzer functions.

  For example, consider the active function for center frequency. When the center-frequency key is pressed, its value is displayed in the active-function readout. Turning the front panel knob changes the active-function readout *and* the value of the predefined variable for center frequency, CF. Changing the value of CF, in turn, changes the value of other active functions related to frequency, such as start and stop frequency:

$$(\text{Stop Frequency} + \text{Start Frequency}) \div 2 = \text{Center Frequency}$$

$$(\text{FB} + \text{FA}) \div 2 = \text{CF}$$

The user-defined functions created by ACTDEF have the following characteristics:

- Text is displayed in the active-function readout, as indicated in the syntax diagram. If omitted, the *user-defined function name* is displayed in the active-function readout.
- A temporary variable is created and assigned the *initial value* indicated in the syntax diagram. The value is displayed in the active function readout.
- The value of the temporary variable can be changed. Each time the value is changed, the user-defined function (having the same name as the variable) is executed. If the user-defined function has been executed with a front panel key, the value is changed with the front panel step keys, knob, or numeric keypad. Remotely, the value is changed by math operations or

by executing the user-defined function name followed by a number (see syntax diagram after description).

- The value of the temporary variable can be returned to the computer, or used for operations with any spectrum analyzer commands that have *predefined variable* in their syntax diagrams.

For example, the following program

```
10 OUTPUT 718;"ACTDEF COUNT, $Enter number.$,5,INT,$$;"   Create user-defined function.
20 OUTPUT 718;"COUNT;"                                    execute user-defined function.
```

produces these results:

- The user-defined function called COUNT is stored in internal memory.
- "Enter number" is displayed in the active function readout.
- A temporary variable called COUNT is created, and assigned the initial value. The variable is available for math operations.
- The current value of the function (and of the temporary variable) is displayed in the active function readout. Number 5 is displayed initially.
- The step keys, knob, and numeric keypad can change the function value.

In the preceding example, the user-defined function routine is a null function. (There are no commands between delimiters $$ in line 10.) In comparison, the following program characterizes the value of COUNT in line 70. In addition, COUNT is executed by front panel key instead of a programming command.

## Example

Create an active user-defined function.

```
60 OUTPUT 718;"ACTDEF COUNT,10000000,HZ,";   Begin definition of active, user-defined
                                             function, called COUNT, that has an
                                             initial value of 10 MHz.
70 OUTPUT 718;"$MPY SP,2,COUNT;$"            Multiply the current value of COUNT
                                             by 2, then set the span equal to the
                                             product. The "$" ends the definition.
80 OUTPUT 718;"KEYDEF 3,COUNT;"              Assign the function to a key.
```

To execute the COUNT function defined above, press (LOCAL), (USER), COUNT.

### Units Argument

In the syntax diagram, the *units* arguments determine

- what unit keys are activated during front panel number entry.
- whether the temporary variable can be used in place of **predefined variable** during math operations.
- how the step functions, UP, (▲), DN, and (▼), change the value of the temporary variable.

Do not use existing user-defined function names or reserved words as labels for user-defined functions.

When using a string- or block-data field to transfer a command definition, be sure to use compatible terminators. Also, any block-field commands within the list must be the absolute type (A#-block).

**Table 2-5. Behavior of Unit Arguments for ACTDEF Command**

| Argument | Step-Increment Value | Unit-Keys | Math Operation Compatibility |
|---|---|---|---|
| STEP | 1 | none | yes |
| INT (integer) | 1 | none | no |
| HZ | Resolution bandwidth during zero-span mode; otherwise, 10% of span. | frequency | yes |
| ABSHZ (absolute hertz) | 1, 3, 10 sequence | frequency | yes |
| SEC | 1, 3, 10 sequence | time | yes |
| DB | 10 dB | relative amplitude | yes |
| DBM | 10 dB | absolute amplitude | yes |
| V | 1, 3, 10 sequence | volts | yes |
| W | 1, 3, 10 sequence | watts | yes |
| A | 1, 3, 10 sequence | amperes | yes |

## Step Type Argument

In the syntax diagram, the *step type* argument is an optional parameter that selects unit step progressions for the various supported ACTDEF unit types. A value of 0, as well as the omission of this argument, selects the default. The following tables lists the valid values for this argument.

**Behavior of Step Types Arguments**

| Argument[1] | Progression | Definition |
|---|---|---|
| 0 | linear | Default step. |
| 1 | linear | Step by 1. |
| 2 | linear | Step by the current vertical division size. |
| 3 | linear | Step by the current CF step size. |
| 6 | linear | Step by one frequency division in non-zero span, otherwise by the resolution bandwidth. |
| 7 | linear | Step by the current horizontal division size. |
| 8 | linear | Step by the current vertical division size, but switch to a 1,2,5 log step if the current value is less than one vertical division. |
| 9 | linear | Step by the current span step size using the current source power step size. |
| 10 | linear | Step by 10. |
| 11 | log | Do a 1,2,5 log step progression. |
| 12 | log | Do a 1,3 log step progression. |

1 If an out of range optional parameter is given, this will be reported the first time the ACTDEF is invoked. The default stepping behavior will then be used.

# ACTPARM

ACTIVE PARAMETER

Turn the active parameter area on or off.

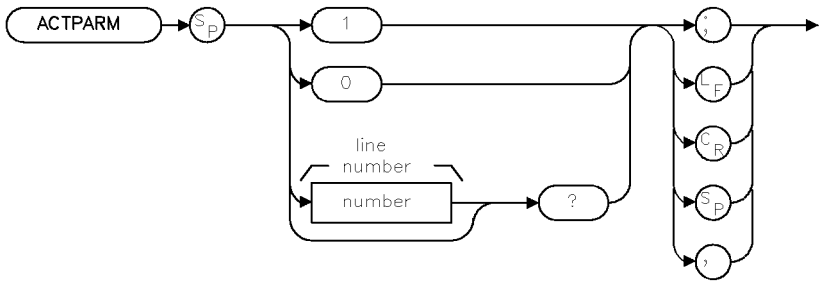


XAPARM

| Item | Description |
|---|---|
| Preset State | OFF |
| Range | 0, 1, 2, 3, 4 |

## Example

```
10 OUTPUT 718;"ACTPARM 1;"      Turn on the active parameters.
20 OUTPUT 718;"ACTPARM?;"       Return the top line.
30 OUTPUT 718;"ACTPARM 0?;"     Return the top line.
40 OUTPUT 718;"ACTPARM 1?;"     Return the next line.
50 OUTPUT 718;"ACTPARM 2?;"     Return the next line.
60 OUTPUT 718;"ACTPARM 3?;"     Return the next line.
70 OUTPUT 718;"ACTPARM 4?;"     Return all four lines.
```

The ACTPARM command turns the display of the active parameter area on or off. The active parameter area has the capability of containing four lines of data. Therefore, when querying the active parameter area, the following data lines are returned:

- 0 returns the first line.
- 1 returns the second line.
- 2 returns the third line.
- 3 returns the fourth line.
- 4 returns all four lines.

## Query Response

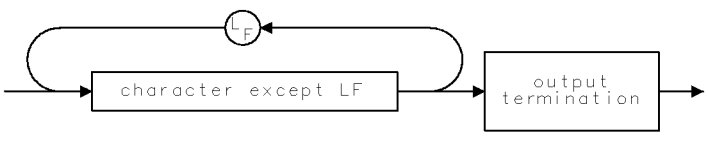


QCHAR

# ADAPBPCTL

A*DL/(A+B+C)▸A

Performs trace math A*DL/(A+B+C)▸A with each sweep.

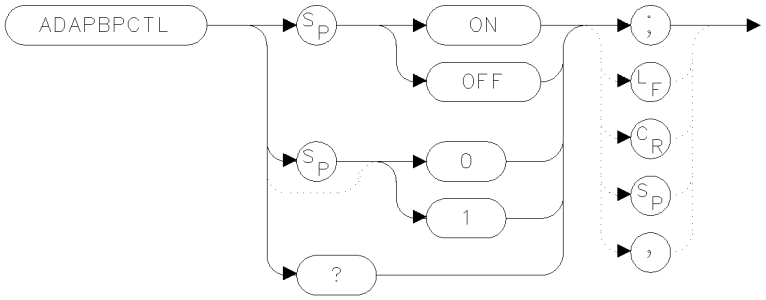


xadapc

| Item | Description |
|---|---|
| Preset State | ADAPBPCTL OFF |

## Example

```
120 OUTPUT 723;"SNGLS;"          Activate single-sweep mode.
130 OUTPUT 723;"LN;"             Select linear amplitude scale.
140 OUTPUT 723;"TS;VIEW TRA;"    Sweep trace A and store it.
150 OUTPUT 723;"ADAPBPCTL ON;"
```

The ADAPBPCTL command requires a linear display mode. It multiplies trace A by the display line and divides the result by the sum of traces A, B, and C. The results are stored in trace A. If trace A is in clear-write mode, the function is continuous and occurs every sweep.

This command allows ratio measurements to be made as a sweep is taken. If trace B has points near the bottom of screen, overflow or poor precision can occur. If a division by zero is attempted, a division by the smallest representable value will be performed instead.

To ensure that correct data is displayed, be sure that a sweep is taken before using this command. Only one trace math operation may be active at any given time.

## Query Response

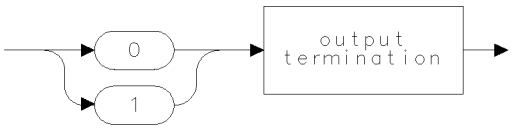


qgen0

## See Also

ADBTL

# ADAPBTL

A*DL/(A+B)▸A

Performs trace math A*DL/(A+B)▸A with each sweep.

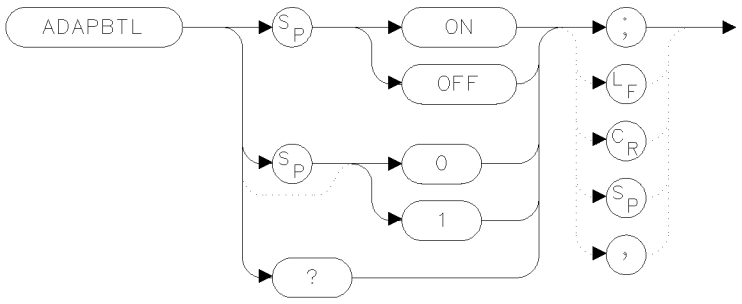


xadatl

| Item | Description |
|---|---|
| Preset State | ADAPBTL OFF |

## Example

```
120 OUTPUT 723;"SNGLS;"          Activate single-sweep mode.
130 OUTPUT 723;"LN;"             Select linear amplitude scale.
140 OUTPUT 723;"TS;VIEW TRA;"    Sweep trace A and store it.
150 OUTPUT 723;"ADAPBTL ON;"
```

The ADAPBTL command requires a linear display mode. It multiplies trace A by the display line and then divides the result by the sum of traces A and B. The results are stored in trace A. If trace A is in clear-write mode, the function is continuous and occurs every sweep.

This command allows ratio measurements to be made as a sweep is taken. If trace B has points near the bottom of screen, overflow or poor precision can occur. If a division by zero is attempted, a division by the smallest representable value will be performed instead.

To ensure that correct data is displayed, be sure that a sweep is taken before using this command. Only one trace math operation may be active at any given time.

## Query Response

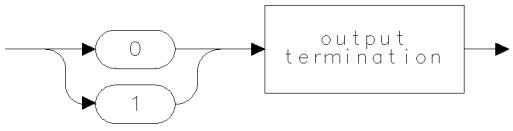


qgen0

# ADBTL

A*DL/B▸A

Performs trace math A*DL/B▸A with each sweep.

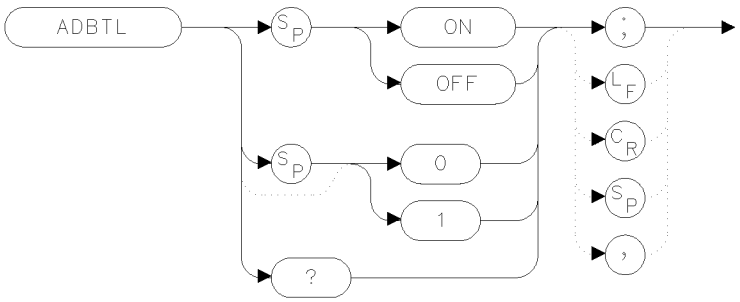


xadbtl

| Item | Description |
|---|---|
| Preset State | ADBTL OFF |

## Example

```
120 OUTPUT 723;"SNGLS;"          Activate single-sweep mode.
130 OUTPUT 723;"LN;"             Select linear amplitude scale.
140 OUTPUT 723;"TS;VIEW TRA;"    Sweep trace A and store it.
150 OUTPUT 723;"ADBTL ON;"
```

The ADBTL command requires a linear display mode. It multiplies trace A by the display line value then divides by trace B. The results are stored in trace A. If trace A is in clear-write mode, the function is continuous and occurs every sweep.

This command allows ratio measurements to be made as a sweep is taken. If trace B has points near the bottom of screen, overflow or poor precision can occur. If a division by zero is attempted, a division by the smallest representable value will be performed instead.

To ensure that correct data is displayed, be sure that a sweep is taken before using this command. Only one trace math operation may be active at any given time.

## Query Response

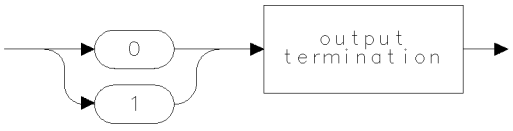


qgen0

# ADC

SELECT ANALOG-TO-DIGITAL CONVERTER

Select internal or external analog-to-digital converter.

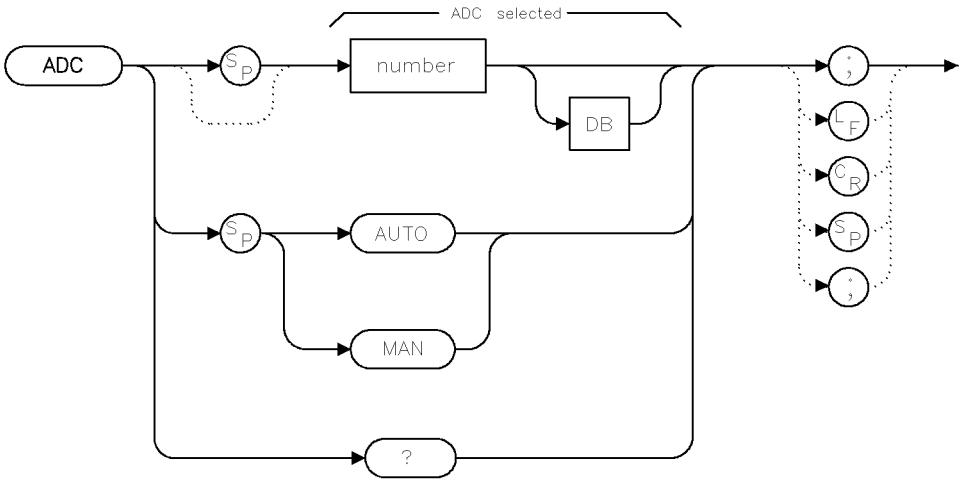


| Item | Description |
|---|---|
| Range | 1 to number of analog-to-digital converters in the system. |
| Step Increment | 1 |
| Interdependent Commands | PADC, DET GND |
| Preset State | Depends on PADC setting. |

## Example

Process video signal with an auxiliary ADC.

```
10 OUTPUT 718;"ADC 2;"
```

ADC switches between the internal and external video processing paths. During normal operation, the video signal is routed to the analog-to-digital converter (ADC) in the local oscillator module for processing.

At power-up, the local oscillator converter is assigned to 1, and successive auxiliary converters are numbered consecutively starting with 2. To obtain faster sweep times when the span is 0 Hz, execute `ADC2` when the HP 70700A digitizer is configured as part of the spectrum analyzer (that is, the digitizer is a "slave" to the local oscillator module). See the *HP 70000 Modular Spectrum Analyzer Installation and Verification Manual* for digitizer installation instructions.

## Query Response

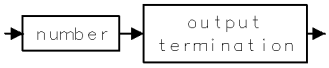

# ADCTL

A*DL/C▶A

Performs trace math A*DL/C▶A with each sweep.

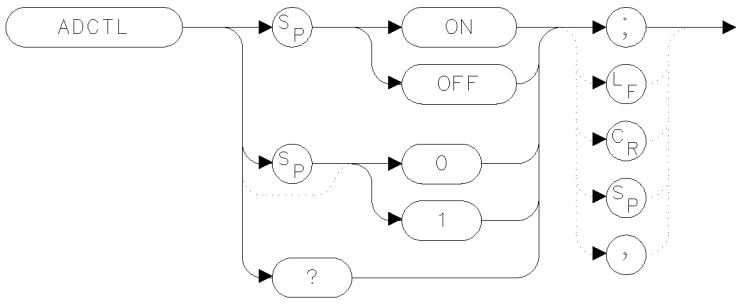


xadctl

| Item | Description |
|---|---|
| Preset State | ADCTL OFF |

## Example

```
120 OUTPUT 723;"SNGLS;"          Activate single-sweep mode.
130 OUTPUT 723;"LN;"             Select linear amplitude scale.
140 OUTPUT 723;"TS;VIEW TRA;"    Sweep trace A and store it.
150 OUTPUT 723;"ADCTL ON;"
```

The ADCTL command requires a linear display mode. It multiplies trace A by the display line value, then divides by trace C. The results are stored in trace A. If trace A is in clear-write mode, the function is continuous and occurs every sweep.

This command allows ratio measurements to be made as a sweep is taken. If trace B has points near the bottom of screen, overflow or poor precision can occur. If a division by zero is attempted, a division by the smallest representable value will be performed instead.

To ensure that correct data is displayed, be sure that a sweep is taken before using this command. Only one trace math operation may be active at any given time.

## Query Response

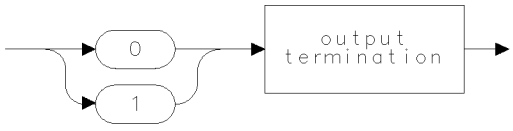


qgen0

# ADD

ADD

Add.

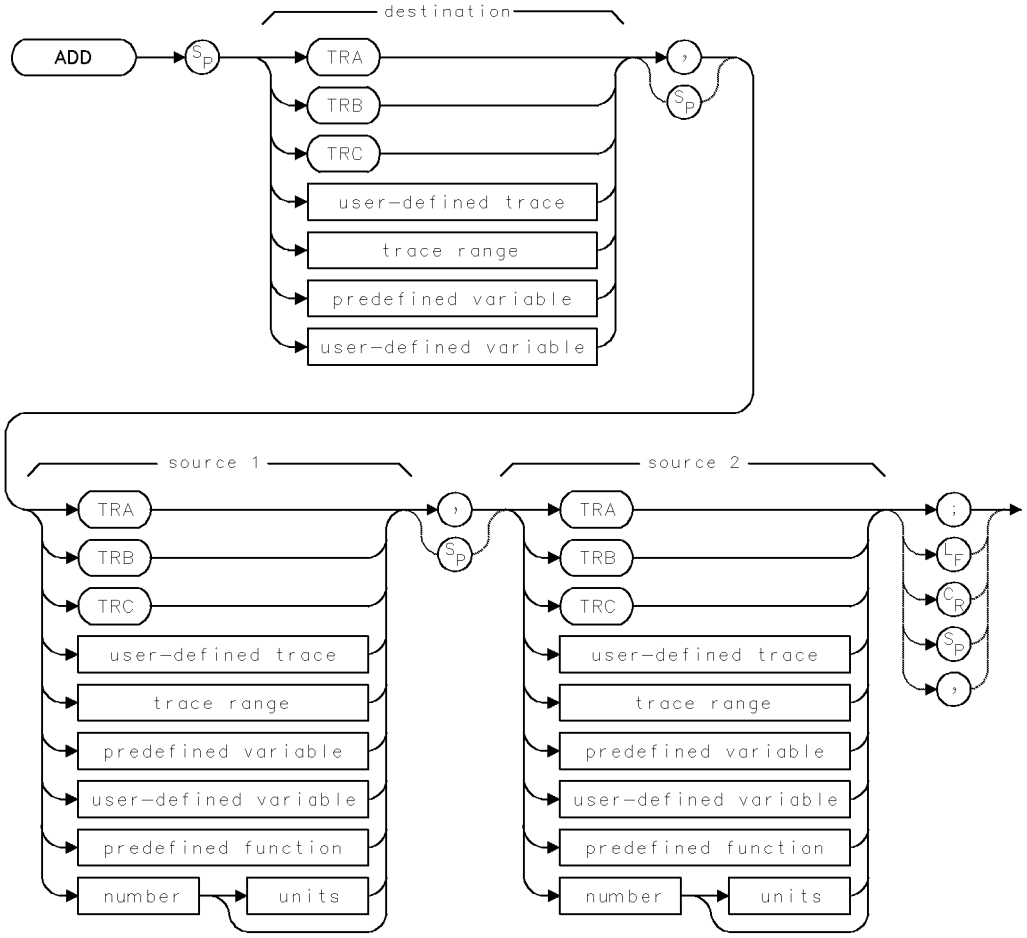


| Item | Description |
|---|---|
| Source or Destination Amplitude Range | 0 – 10,000 measurement units for linear trace data in *TRA*, *TRB*, *TRC*, *trace range*, or *user-defined trace*. –32,768 – +32,767 measurement units for logarithmic trace data in *TRA*, *TRB*, *TRC*, *trace range*, or *user-defined trace*. $\pm$ 1.8 $\times$ $10^{308}$ when using *number*, *predefined variable*, or *user-defined variable*. |
| Destination-Length Range | 1 – 1024 position units. |
| Source-Length Range | 1 – 1024 position units. Default is 800 position units when using *TRA*, *TRB*, *TRC*. Truncated if longer than destination length. If shorter than destination length, last element is extended for operation. |
| Requirements | Be sure data reflects one complete sweep when using *TRA*, *TRB*, *TRC*, or *trace range* for source. SNGLS and TS suggested. TRDEF required when using *user-defined trace*. VARDEF required when using *user-defined variable*. |

## Example

Add 38 MHz to the center frequency, then store their sum in a user-defined variable.

(Connect calibrator signal to analyzer input.)

```
140 OUTPUT 718;"SP 1MHZ;CF 300MHZ;TS;"   Set measurement range and sweep it.
150 OUTPUT 718;"VARDEF I,0;"             Define user-defined variable I equal to 0.
160 OUTPUT 718;"ADD I,CF,38MHZ;"         Add 38 MHz to the center frequency, then
                                         place the sum in I.
```

The ADD command adds sources 1 and 2, point by point, then sends their sum to the destination.

# AMB

A–B▶A

Performs trace math A–B▶A with each sweep.

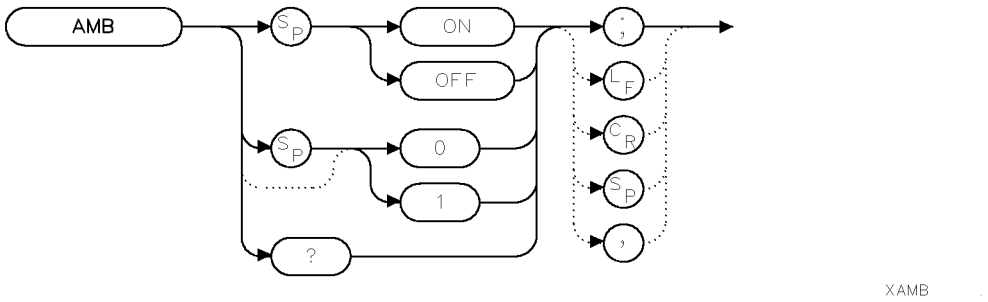


| Item | Description |
|---|---|
| Interdependent Commands | TS, TRPST, TRSTAT, VIEW, TM, VTL, VTH, CONTS, SNGLS, CLRW, STORREF |
| Preset State | `AMB OFF` |

## Example

Subtract trace B from trace A.

(Connect calibrator signal to analyzer input.)

```
10 CLEAR 718                          Initialize analyzer.
20 OUTPUT 718;"IP;"
30 OUTPUT 718;"CLRDSP;"               Clear graphics from memory.
40 OUTPUT 718;"SNGLS;"                Activate single-sweep mode.
50 OUTPUT 718;"SP 1MHZ;CF 300MHZ;"    Set measurement range.
60 OUTPUT 718;"RL 10 dBm;"            Set reference level.
70 OUTPUT 718;"TS;VIEW TRA;"          Measure with trace A and store results.
80 OUTPUT 718;"CLRW TRB;TS;"          Measure with trace B.
90 OUTPUT 718;"AMB ON;"               Subtract trace B from trace A.
```

The AMB command subtracts trace B from trace A, point by point, then places the results in trace A. If trace A is in clear-write mode and `AMB ON` is active, the AMB function is continuous and occurs every sweep. Executing `AMB ON` places trace B in view mode.

The AMBPL command overrides AMB.

Be sure each trace contains a complete sweep of measurement information.

## Query Response

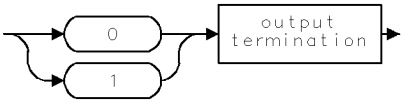

# AMBMC

(A–B)–C▶A

Performs trace math (A–B)–C▶A with each sweep.

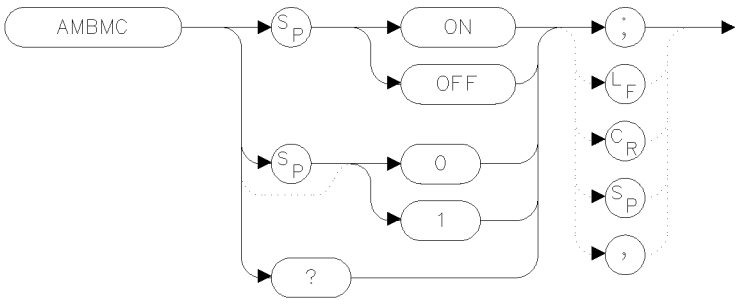


x ambmc

| Item | Description |
|---|---|
| Preset State | AMBMC OFF |

## Example

```
120 OUTPUT 723;"SNGLS;"          Activate single-sweep mode.
130 OUTPUT 723;"LG 5DB;"         Select logarithmic scale.
140 OUTPUT 723;"TS;VIEW TRA;"    Sweep trace A and store it.
150 OUTPUT 723;"AMBMC ON;"
```

The AMBMC command subtracts both trace B and trace C from trace A. The results are stored in trace A. If trace A is in clear-write mode, the function is continuous and occurs every sweep. Only one trace math operation may be active at any given time.

## Query Response

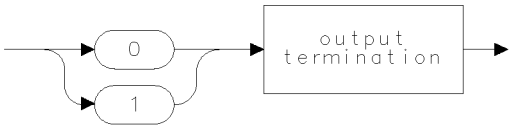


qgen0

# AMBMCPL

(A−B)−C+DL▸A

Performs trace math (A−B)−C+DL▸A with each sweep.

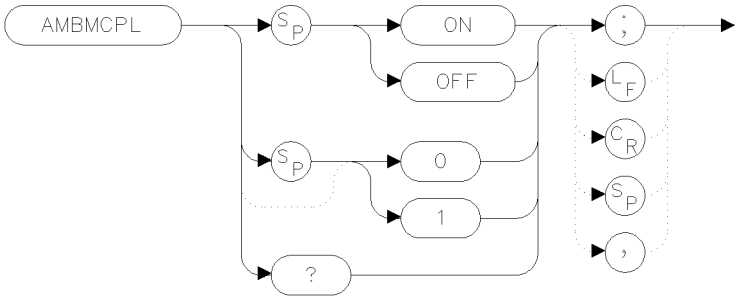


xabmpl

| Item | Description |
|---|---|
| Preset State | AMBMCPL OFF |

## Example

```
120 OUTPUT 723;"SNGLS;"          Activate single-sweep mode.
130 OUTPUT 723;"LG 5DB;"         Select logarithmic scale.
140 OUTPUT 723;"TS;VIEW TRA;"    Sweep trace A and store it.
150 OUTPUT 723;"AMBMCPL ON;"
```

The AMBMCPL command subtracts both trace B and trace C from trace A, and then adds the display line. The results are stored in trace A. If trace A is in clear-write mode, the function is continuous and occurs every sweep. Only one trace math operation may be active at any given time.

## Query Response

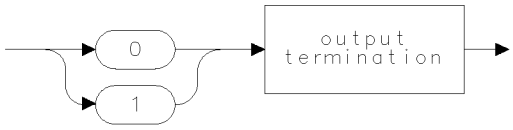


qgen0

# AMBPL

A−B+DL▸A

Performs trace math A−B+DL▸A with each sweep.

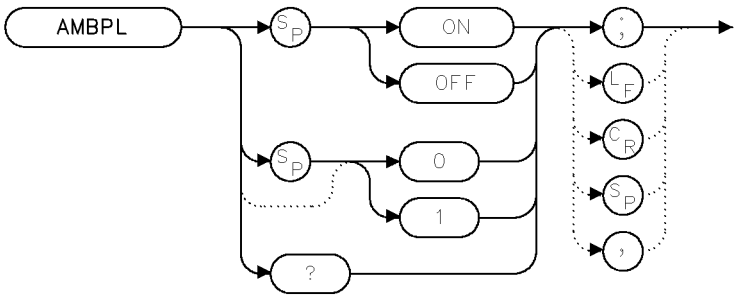


xambpl

| Item | Description |
|---|---|
| Interdependent Commands | AMB, TS, TRPST, TRSTAT, VIEW, TM, VTL, VTH, CONTS, SNGLS, CLRW, STORREF |
| Preset State | AMBPL OFF |

## Example

Subtract trace B from trace A, then add the display line.

```
40 OUTPUT 718;"SNGLS;"                Activate single-sweep mode.
50 OUTPUT 718;"SP 1MHZ;CF 300MHZ;"    Set measurement range.
60 OUTPUT 718;"TS;VIEW TRA;"          Measure with trace A and store results.
70 OUTPUT 718;"RL 10DBM;"             Change reference level to 10 dBm.
80 OUTPUT 718;"CLRW TRB;TS;"          Measure with trace B.
90 OUTPUT 718;"DL -10DBM;"            Set display line to −10 dBm.
100 OUTPUT 718;"AMBPL ON;"            Subtract trace B from trace A, then add display
                                      line.
```

The AMBPL command subtracts trace B from trace A, point by point, adds the display line to the difference, then stores the result in trace A. When AMBPL is executed, trace B is placed in view mode and cannot be swept. If trace A is in clear-write mode when AMBPL is executed, the AMBPL function is continuous and occurs every sweep.

The AMBPL command overrides the AMB command.

Be sure each trace contains a complete sweep of measurement information.

## Query Response

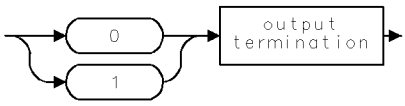

# AMC

A–C▶A

Performs trace math A–C▶A with each sweep.

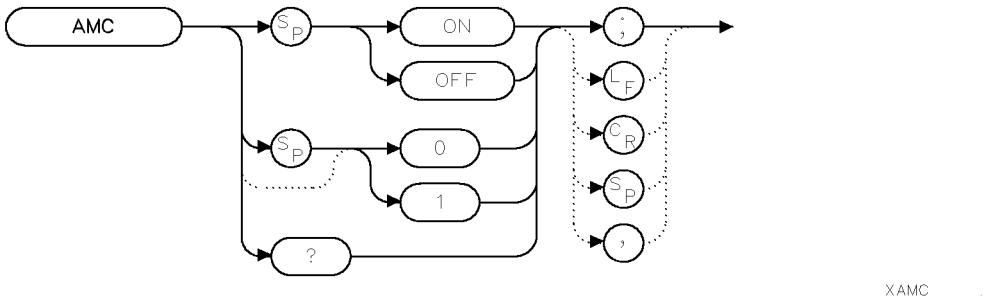


| Item | Description |
|---|---|
| Interdependent Commands | TS, TRPST, TRSTAT, VIEW, TM, VTL, VTH, CONTS, SNGLS, CLRW, STORREF |
| Preset State | `AMC OFF` |

## Example

Subtract trace C from trace A.

```
40 OUTPUT 718;"SNGLS;"                 Activate single-sweep mode.
50 OUTPUT 718;"SP 1MHZ;CF 300MHZ;"     Set measurement range.
60 OUTPUT 718;"RL 10DBM;"              Change reference level.
70 OUTPUT 718;"TS;VIEW TRA;"           Measure with trace A and store results.
80 OUTPUT 718;"CLRW TRC;TS;"           Measure with trace C.
90 OUTPUT 718;"AMC ON;"                Subtract trace C from trace A.
```

The AMC command subtracts trace C from trace A, point by point, then places the results in trace A. If trace A is in clear-write mode and `AMC ON` is active, the AMC function is continuous and occurs every sweep. Executing `AMC ON` places trace C in view mode.

Be sure each trace contains a complete sweep of measurement information.

## Query Response

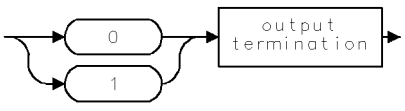

# AMCPL

(A–C)+DL▸A

Performs trace math (A–C)+DL▸A with each sweep.

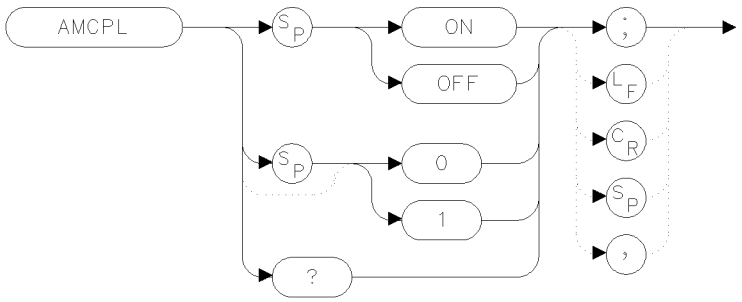


xamcpl

| Item | Description |
|---|---|
| Preset State | AMCPL OFF |

## Example

```
120 OUTPUT 723;"SNGLS;"          Activate single-sweep mode.
130 OUTPUT 723;"LG 5DB;"         Select logarithmic scale.
140 OUTPUT 723;"TS;VIEW TRA;"    Sweep trace A and store it.
150 OUTPUT 723;"AMCPL ON;"
```

The AMCPL command subtracts trace C from trace A, and then adds the display line. The results are stored in trace A. If trace A is in clear-write mode, the function is continuous and occurs every sweep. Only one trace math operation may be active at any given time.

## Query Response

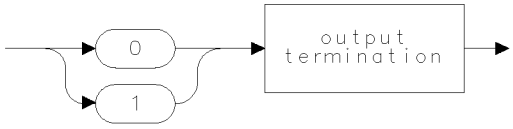


qgen0

# AMETER

AMETER

Enables readout of currently updated trace point.

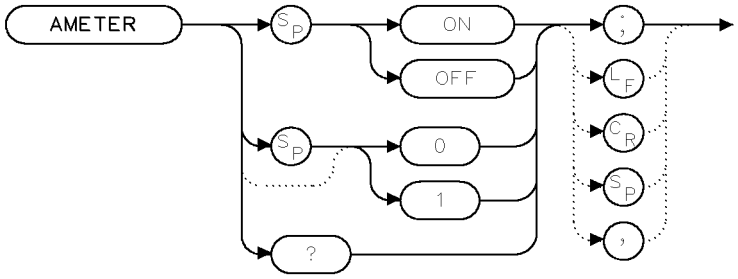


XAMTR

| Item | Description |
|---|---|
| Preset State | AMETER OFF |

## Example

```
70  OUTPUT 723;"AMETER ON;"
```

The AMETER command enables a readout of the amplitude of the blank-ahead marker in the display's message area. The blank-ahead marker is the point on the trace which is currently being updated by new measurement data.

## Query Response

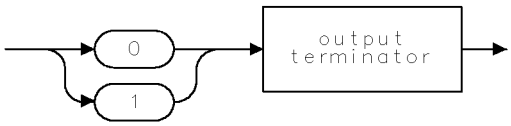


QAMTR

# AMPCOR

AMPLITUDE CORRECTION

Apply amplitude correction at specified frequencies.

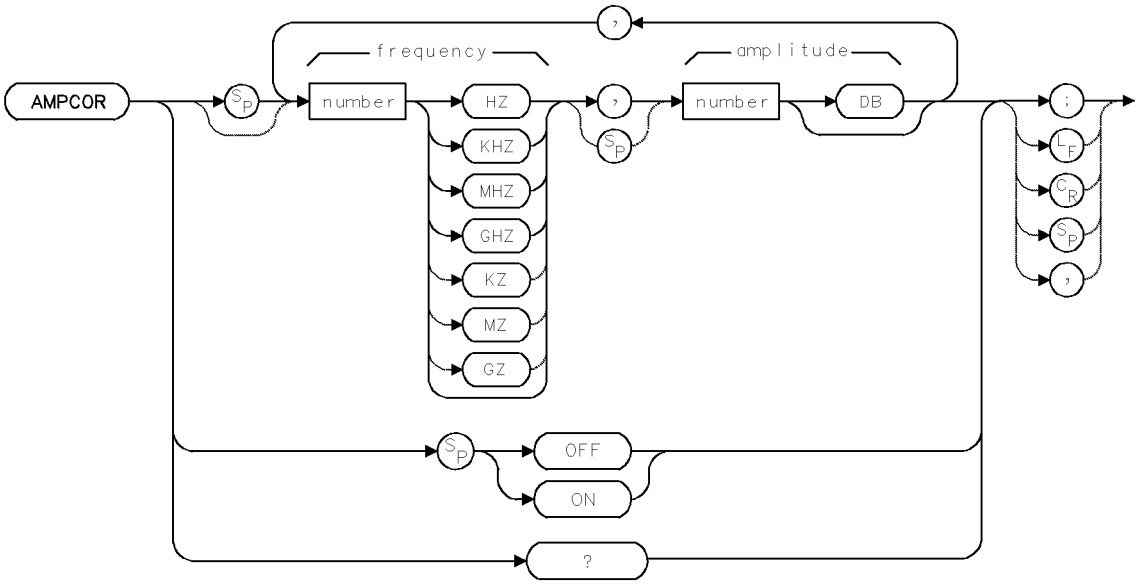


| Item | Description |
|---|---|
| Frequency Range | 0 – 1000 GHz |
| Amplitude Range | full measurement range |
| Number of frequency/amplitude pairs | Depends on available internal memory. |
| Requirements | Requires internal memory. |
| Interdependent Commands | PERASE, ERASE, DISPOSE, PROTECT |
| Preset State | AMPCOR OFF |

## Example

Compensate for frequency-dependent amplitude inaccuracies at the input.

```
150 OUTPUT 718;"CF 1GHZ;SP 2GHZ;"    Set center frequency and span.
160 OUTPUT 718;"AMPCOR 100MHZ,5DB,1GHZ,-5DB,1.5GHZ,10DB;"
```

*Store frequency-amplitude pairs in analyzer. Notice that frequencies are in ascending order.*

```
170 !
180 OUTPUT 718;"AMPCOR?;"          Return correction values to computer.
190 FOR I=1 TO 3                   Store first three pairs in computer array A$[I].
200 ENTER 718;A$[I]
210 PRINT A$[I]
220 NEXT I
230 DISP "PRESS CONTINUE"
```

```
240 PAUSE                          press CONTINUE on computer keyboard to continue
                                   program.
250 DISP ""
260 OUTPUT 718;"AMPCOR OFF;"       Turn off AMPCOR function.
270 OUTPUT 718;"AMPCOR?;"          Return correction values to computer. Values are
                                   zeros, because AMPCOR is turned off.
280 ENTER 718;A$[1]
290 PRINT A$[1]
```

Use AMPCOR to compensate for frequency-dependent amplitude variations at the input port. Pairs of frequency-amplitude correction points can be entered, depending on the amount of available internal memory. The frequency values entered must be equal or be in increasing order, or an error condition results. Whenever AMPCOR is on, the correction values are added to all measurement results.

The values of the correction points are applied across the active measurement range. Between points, the correction values are interpolated. When measuring at frequencies outside the first and last correction points, these values are used as the correction value.

When AMPCOR is executed, the frequency-amplitude pairs are stored in internal memory. `DISPOSE ALL`, FORMAT, and `PERASE` erase the amplitude-correction pairs from memory.

Because AMPCOR adjusts IF gain or attenuation, AMPCOR should be used with care when measuring signals near the compression level that are also at a frequency that is corrected by the AMPCOR command.

## Query Response

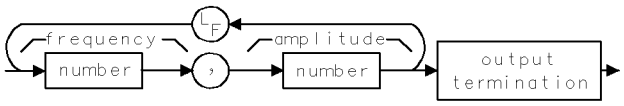


Returned values are 0, 0 when AMPCOR is set to OFF.

# AMPU

AMPLITUDE UNITS

Convert **measurement units** to **parameter units**.

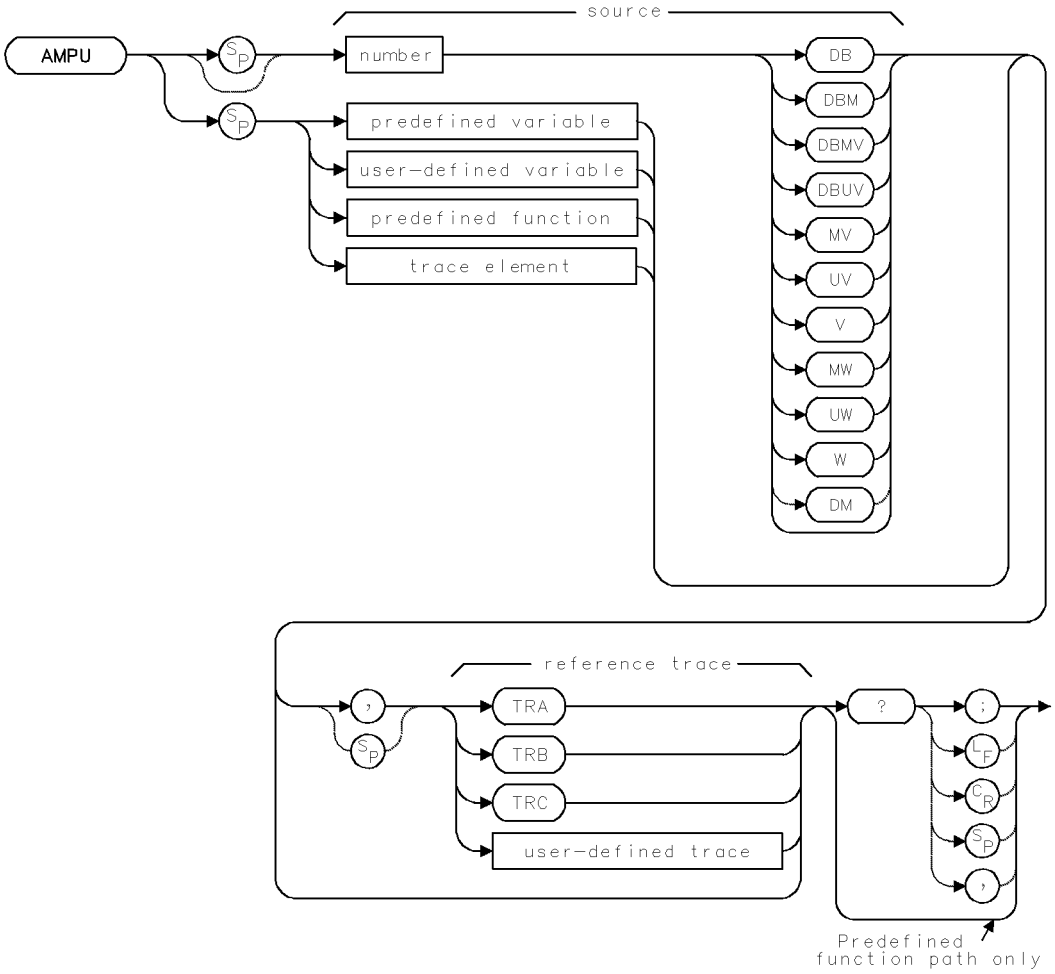


| Item | Description |
|---|---|
| Requirements | TRDEF required when using *user-defined trace*. |
| Source Amplitude Range | For *trace element*, 0 – 10,000 measurement units for linear trace data, and –32,768 – +32,767 measurement units for logarithmic trace data. $\pm$ 1.8 $\times$ $10^{308}$ when using *number*, *predefined variable*, or *user-defined variable*. |
| Source-Length Range | 1 – 1024 |
| Reference-Trace Amplitude Range | 0 – 10,000 measurement units for linear trace data. –32,768 – +32,767 measurement units for logarithmic trace data. |
| Reference-Trace Length Range | 3 – 1024 position units. Default is 800 position units when using *TRA*, *TRB*, *TRC*. |
| Interdependent Commands | AUNITS, RL, MEASURE, ROFFSET, INZ, LN, LG |

## Example

Display trace-amplitude information in both measurement and amplitude units on the computer display.

```
160 OUTPUT 718;"VARDEF NN,0;"          Define user-defined variable, NN equal to 0.
170 OUTPUT 718;"MOV NN,TRA[15];"       place the value of the fifteenth element of trace A
                                       in NN.
180 OUTPUT 718;"NN?;"                  Return value of NN in measurement units.
190 ENTER 718;N                        Store value in computer variable, N.
200 OUTPUT 718;"AMPU NN,TRA?;"         Return value of NN in amplitude units.
210 ENTER 718;M                        Store value in computer variable, M.
220 OUTPUT 718;"AUNITS?;"              Return description of active units.
230 ENTER 718;Units$                   Store response in computer variable, Units $.
240 PRINT N;"MEASUREMENT UNITS"        print value in measurement units.
250 PRINT M;Units$                     print value in amplitude units.
```

The AMPU command converts measurement-unit values to amplitude-unit values.

Measurement units describe trace-amplitude information as follows:

For logarithmic trace information, a measurement unit is one hundredth of a dBm.

[value in dBm] × 100 = value in measurement units

For linear trace information, a measurement unit is defined as 0 (zero) for the bottom of the graticule, and as 10,000 for the top (reference level).

Amplitude units describe trace-amplitude information. (See following table.)

**Table 2-6. Amplitude Units**

| Decibels | Watts | Volts |
|---|---|---|
| dB | W | V |
| dBm | mW | mV |
| dBmV | $\mu$W | $\mu$V |
| dB$\mu$V | | |

If the *reference trace* is specified, AMPU converts to the amplitude values according to the amplitude scale of the reference trace. Otherwise, AMPU converts to units determined by the reference level, AUNITS command, or MEASURE command. See "Units" under "Math Functions, Variables, and Trace Arrays" in the Programming Fundamentals chapter.

AMPU must be used as either a query or as a source in another analyzer command. Form a query by ending the AMPU statement with a question mark (?). When used as a query, AMPU returns the amplitude-unit value of the source.

Use AMPU as a source by incorporating the AMPU statement into the source of any spectrum analyzer command having *predefined function* in its syntax diagram. When AMPU is used as a source, the amplitude-unit value of the source is used for operation by the command containing AMPU. See "Using Predefined Functions as Sources" under "Math Functions, Variables, and Trace Arrays" in the Programming Fundamentals chapter.

## Predefined-Function Syntax

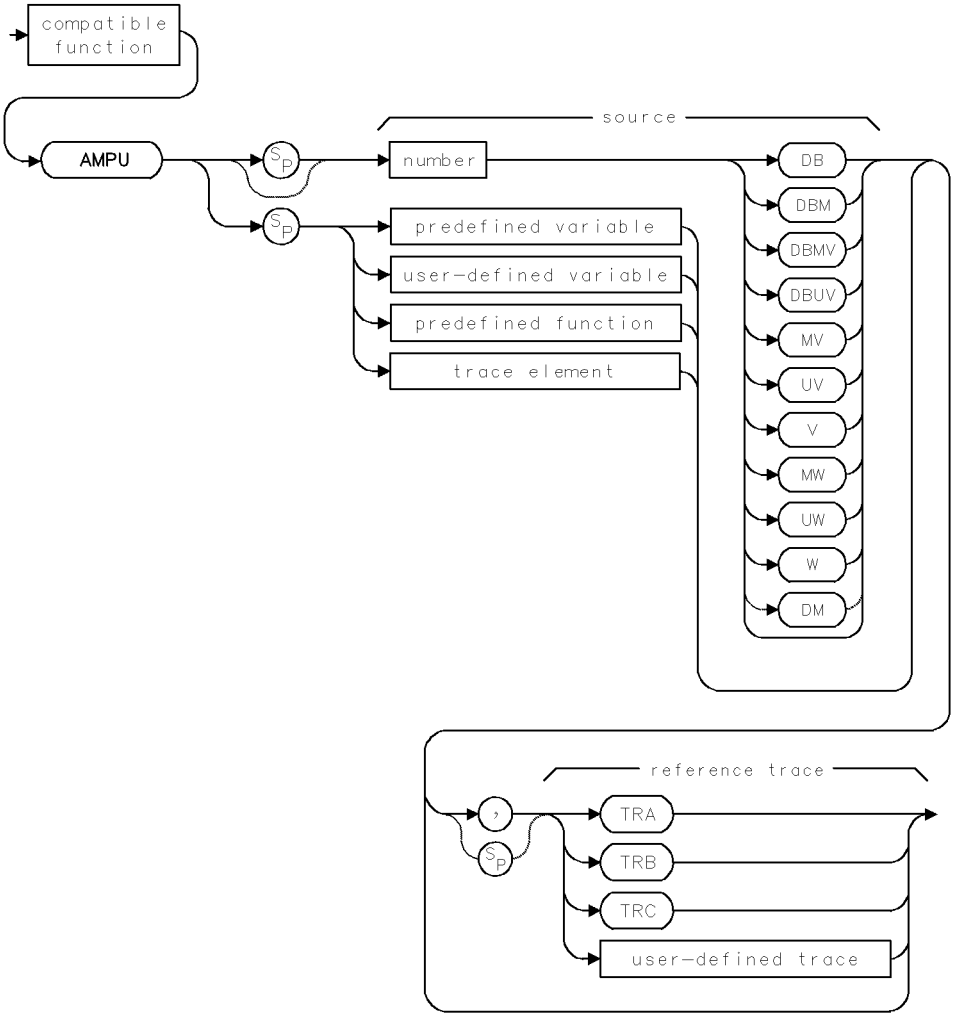

## Query Syntax

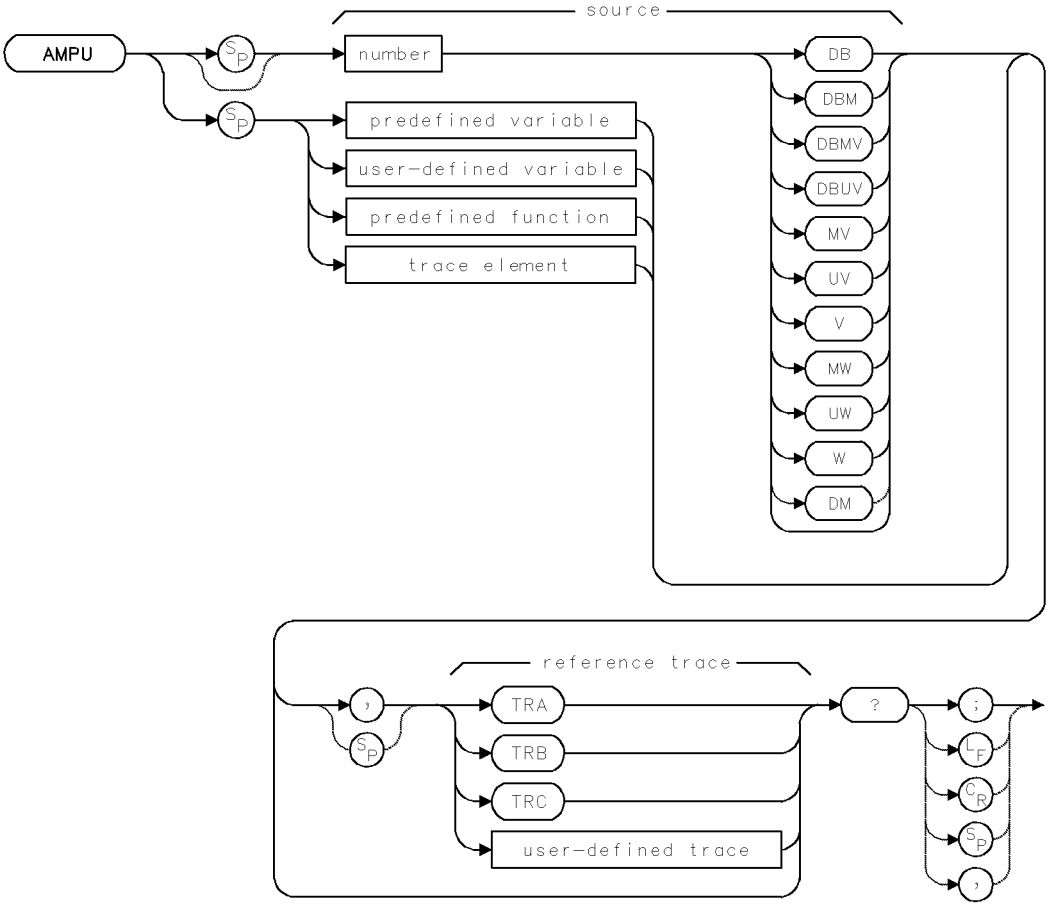

## Query Response

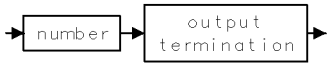

# ANNOFF

LOCK ANNOTATIONS OFF

Turn off all display annotation.

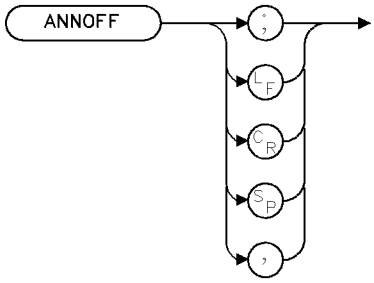


XANNOF

| Item | Description |
|---|---|
| Interdependent Commands | ANNOT OFF, IP |

The ANNOFF command turns off all annotation on the display screen similar to the ANNOT OFF command. The difference is that, in order to reenable the display annnotation, either execute the IP command or press the INSTRUMENT PRESET key on the front panel.

This command provides measurement security by blanking all display annotation for the current instrument setup and then requiring an instrument preset to turn the annotation back on.

# ANNOT

ANNOTATION

Turn annotation on or off.

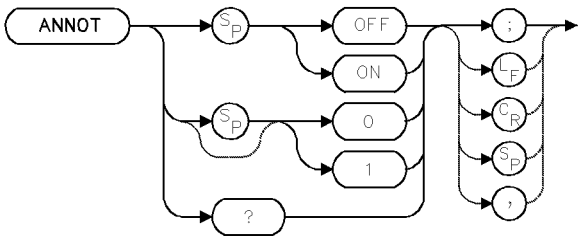


| Item | Description |
|---|---|
| Interdependent Command | TITLE |
| Preset State | ANNOT ON |

## Example

Turn off the annotation.

```
110 OUTPUT 718;"ANNOT OFF;"
```

The ANNOT command turns off the annotation on the analyzer display. When the annotation is turned off, the time between sweeps decreases.

The annotation command also blanks text displayed with the TITLE command.

## Query Response

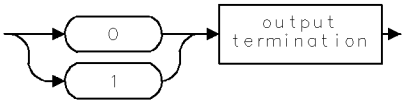

# APB

A+B▶A

Add trace B and trace A, then enter sum in trace A.

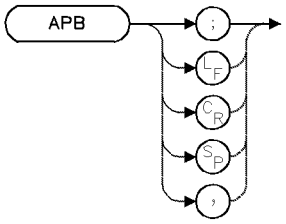


| Item | Description |
|---|---|
| Requirements | Be sure data reflects one complete sweep for trace A and trace B. SNGLS and TS suggested. |

## Example

Add traces A and B.

```
30 OUTPUT 718;"SNGLS;"                          Activate single-sweep mode.
40 OUTPUT 718;"RL 10DBM;SP 1MHZ;CF 300MHZ;"     Set measurement range.
50 OUTPUT 718;"TS;VIEW TRA;"                    Sweep trace A and view results.
60 OUTPUT 718;"CLRW TRB;TS;"                    Clear write trace B. Sweep trace B.
70 OUTPUT 718;"AMB ON;"                         Subtract trace B from trace A.
80 OUTPUT 718;"BLANK TRA;BLANK TRB;"            Blank traces A and B.
90 PAUSE                                        press CONTINUE on computer keyboard.
100 OUTPUT 718;"BLANK TRA;BLANK TRB;"           Blank traces A and B.
110 OUTPUT 718;"APB;VIEW TRA;"                  Add trace B to trace A. View trace
                                                A.
```

The APB command adds traces A and B, point by point, then sends the result to trace A. Thus, APB can restore the original trace after A-minus-B function (AMB) is executed. However, unlike AMB, the math operation is done only once, making `APB` equivalent to executing `ADD TRA,TRA,TRB`.

# APBDCTL

DL*(A+B)/C▸A

Performs trace math DL*(A+B)/C▸A with each sweep.

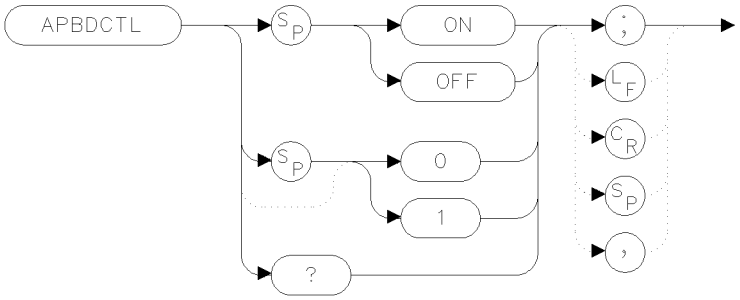


xapbdc

| Item | Description |
|---|---|
| Preset State | APBDCTL OFF |

## Example

```
120 OUTPUT 723;"SNGLS;"          Activate single-sweep mode.
130 OUTPUT 723;"LN;"             Select linear amplitude scale.
140 OUTPUT 723;"TS;VIEW TRA;"    Sweep trace A and store it.
150 OUTPUT 723;"APBDCTL;"
```

The APBDCTL command requires a linear display mode. It multiplies the sum of traces A and B by the display line. Then, this result is divided by trace C. The final results are stored in trace A. If trace A is in clear-write mode, the function is continuous and occurs every sweep.

This command allows ratio measurements to be made as a sweep is taken. If trace B has points near the bottom of screen, overflow or poor precision can occur. If a division by zero is attempted, a division by the smallest representable value will be performed instead.

To ensure that correct data is displayed, be sure that a sweep is taken before using this command. Only one trace math operation may be active at any given time.

## Query Response

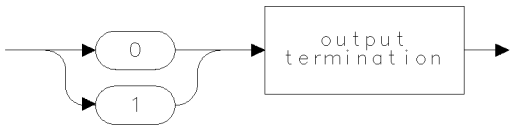


qgen0

# ASWP

HP 70900 SWEEP

Limit sweep time range to maintain best span accuracy.

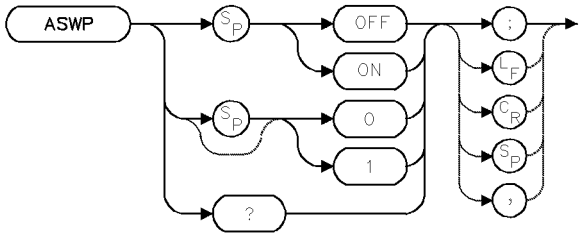


| Item | Description |
|---|---|
| Interdependent Commands | ST |

The ASWP command is provided for backwards compatibility with earlier spectrum analyzer models. Use the ASWP command to limit minimum sweep times to values greater than 50 ms.

The ASWP command varies the available sweep-time range to control span accuracy. Execute `ASWP ON` to obtain best span accuracy. `ASWP OFF` allows sweep times as fast as 10 ms with changes to span accuracy. For details, refer to the specifications in the *HP 70000 Modular Spectrum Analyzer Installation and Verification Manual*.

## Query Response

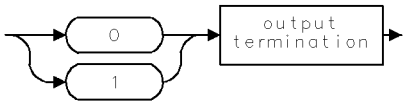

# AT

INPUT ATTENUATION

Attenuate input signal.

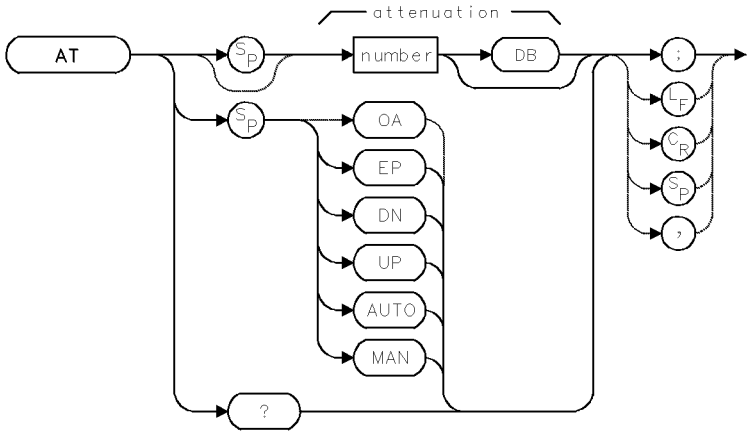


| Item | Description |
|---|---|
| Attenuation Range | Typically 0 – 70 dB (hardware dependent) |
| Step Increment | Typically 10 dB (hardware dependent) |
| Coupling | Coupled to reference level (RL), mixer level (ML), and maximum input level (MIL). |
| Interdependent Commands | RL, ML, MIL, OPTATN |
| Preset State | `AT 10DB` |

## Example

Change input attenuation with front panel keys while computer is controlling analyzer.

```
140 OUTPUT 718;"AT EP;"
```
*Suspend program operation to change attenuation with the front panel keys. Enter a value, then press* `ACCEPT VALUE` *to continue the program.*

```
150 OUTPUT 718;"AT AUTO;"
```
*Recouple the analyzer to the reference level.*

The AT command specifies RF-input attenuation between the input port and the first mixer, in 10 dB increments. To prevent spectrum analyzer damage, the attenuation can be set to 0 dB only by numeric entry with the keypad or by executing `AT 0`.

When the lightwave input is active, the AT command controls the lightwave attenuator.

The input attenuator is coupled to the settings of the reference level (RL), maximum-mixer level (ML), and maximum-input level (MIL). The coupling keeps the mixer-input level below a gain-compression level when a continuous wave signal is displayed with its peak at the reference level. See *HP 70000 Modular Spectrum Analyzer Operating Manual*, "Gain Compression and Maximum Input Levels" under "Amplitude Functions" in the softkey reference chapter.

## Query Response

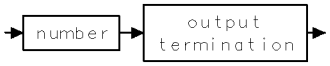

# AUNITS

AMPLITUDE UNITS

Change units of amplitude annotation and returned amplitude data.

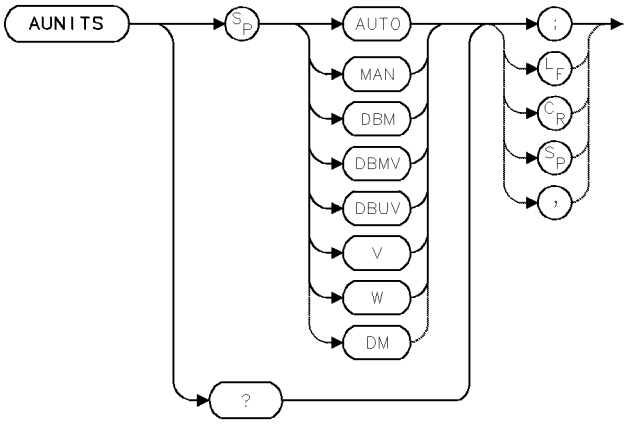


| Item | Description |
|---|---|
| Preset State | `AUNITS DBM` |
| Restrictions | In lightwave optical mode, V is not a valid parameter. |

## Example

Change the units of the amplitude readouts.

```
120 OUTPUT 718;"AUNITS DBMV;"   Indicate amplitude units in dB millivolt.
160 OUTPUT 718;"AUNITS AUTO;"   Indicate amplitude units in dBm.
```

The AUNITS command changes the units of the amplitude readouts displayed on the analyzer display or returned to the computer. The AUNITS command also determines the amplitude units for analyzer commands where the default-units path is specified.

AUNITS does not affect trace amplitude information returned to the computer with the TRA, TRB, or TRC commands.

## Query Response

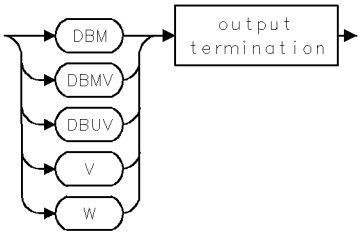

# AVG

AVERAGE

Compute average.

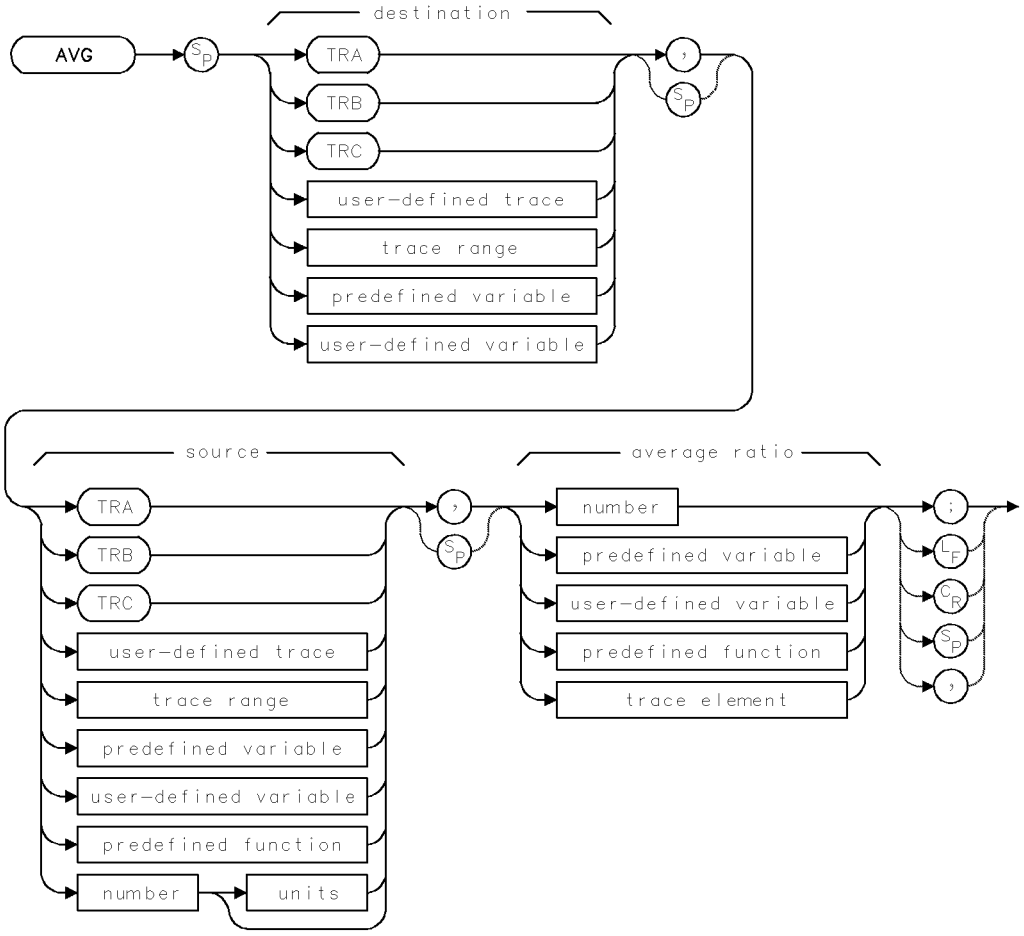

| Item | Description |
|---|---|
| Average-Ratio Range | −32,768 – +32,767, except 0 |
| Source or Destination Amplitude Range | 0 – 10,000 measurement units for linear trace data in *TRA*, *TRB*, *TRC*, *trace range*, or *user-defined trace*. −32,768 – +32,767 measurement units for logarithmic trace data in *TRA*, *TRB*, *TRC*, *trace range*, or *user-defined trace*. ± $1.8 \times 10^{308}$ when using *number*, *predefined variable*, or *user-defined variable*. |
| Destination-Length Range | 1 – 1024 position units. |
| Source-Length Range | 1 – 1024 position units. Default is 800 position units when using *TRA*, *TRB*, *TRC*. Truncated if longer than destination length. If shorter than destination length, last element is extended for operation. |
| Requirements | Be sure data reflects one complete sweep when using *TRA*, *TRB*, *TRC*, or *trace range* for source. SNGLS and TS suggested. TRDEF required when using *user-defined trace*. VARDEF required when using *user-defined variable*. |

## Example

Measure with traces A and B using positive- and negative-peak detection. Average the measurement results in the traces, then view the averaged results in trace A.

```
140 OUTPUT 718;"SNGLS;"          Activate single-sweep mode.
150 OUTPUT 718;"DET POS;TS;"     Activate positive-peak detection. Measure with
                                 trace A.
160 OUTPUT 718;"VIEW TRA;"       Store measurement results and view trace A.
170 OUTPUT 718;"DET NEG;"        Activate negative-peak detection.
180 OUTPUT 718;"CLRW TRB;TS;"    Measure with trace B.
190 OUTPUT 718;"VIEW TRB;"       Store measurement results and view trace B.
200 OUTPUT 718;"AVG TRA,TRB,2;"  Average trace B with 2 and store results in trace
                                 A.
210 OUTPUT 718;"BLANK TRB;"      Blank trace B leaving only averaged results.
```

The AVG command averages the source and the destination, then stores the result in the destination according to the following algorithm:

$$\text{destination}_{new} = [(\text{average ratio} - 1) \times \text{destination}_{old} + \text{source}\ ] \div \text{average ratio}$$

When the source is a trace, be sure it contains a complete sweep of measurement information.

# AXB

TRACE A EXCHANGE TRACE B

Exchange contents of trace A and trace B.

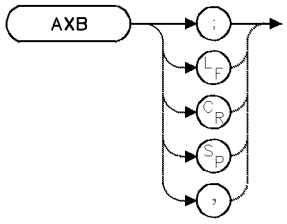


| Item | Description |
|---|---|
| Requirements | Be sure data reflects one complete sweep. |
| Interdependent Commands | TS, VIEW, CLRW, SNGLS |

## Example

Exchange the contents of traces A and B.

```
100 CLEAR 718                          Initialize analyzer.
110 OUTPUT 718;"IP;"
120 OUTPUT 718;"SNGLS;"                Activate single-sweep mode.
130 OUTPUT 718;"CF 300MHZ;SP 1MHZ;"    Set measurement range.
140 OUTPUT 718;"TS;VIEW TRA;"          Sweep trace A and store it.
150 OUTPUT 718;"CONTS;"                Activate continuous sweeping.
160 OUTPUT 718;"FS;"                   Measure with full span.
170 OUTPUT 718;"CLRW TRB;TS;"          Clear-write trace B.
180 PAUSE                              press CONTINUE on computer keyboard.
190 OUTPUT 718;"AXB;"                  Exchange traces A and B.
```

The AXB command exchanges the contents of traces A and B. If trace A and trace B are in clear-write mode, AXB puts them in view mode. If the traces are of different lengths, data is lost. Use TRDEF or TRPST to set the lengths equal.

# AXC

TRACE A EXCHANGE TRACE C

Exchange contents of trace A and trace C.

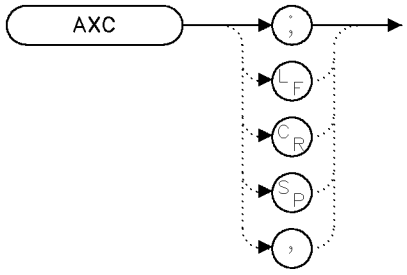


xaxc

## Example

```
120 OUTPUT 723;"SNGLS;"                  Activate single-sweep mode.
130 OUTPUT 723;"CF 950MHZ;SP 500MHZ;"    Set measurement range.
140 OUTPUT 723;"TS;VIEW TRA;"            Sweep trace A and store it.
150 OUTPUT 723;"AXC;"                    Exchange traces A and C.
```

The AXC command exchanges the contents of traces A and C. If trace A and trace C are in clear-write mode, AXC puts them in view mode. If the traces are of different lengths, data is lost. Use TRDEF or TRPST to set the lengths equal. Be sure the traces contain a complete sweep of measurement information by using SNGLS and TS commands.

## See Also

TS, VIEW, CLRW, SNGLS

# BIT

BIT

Return or receive state (0 or 1) of bit.

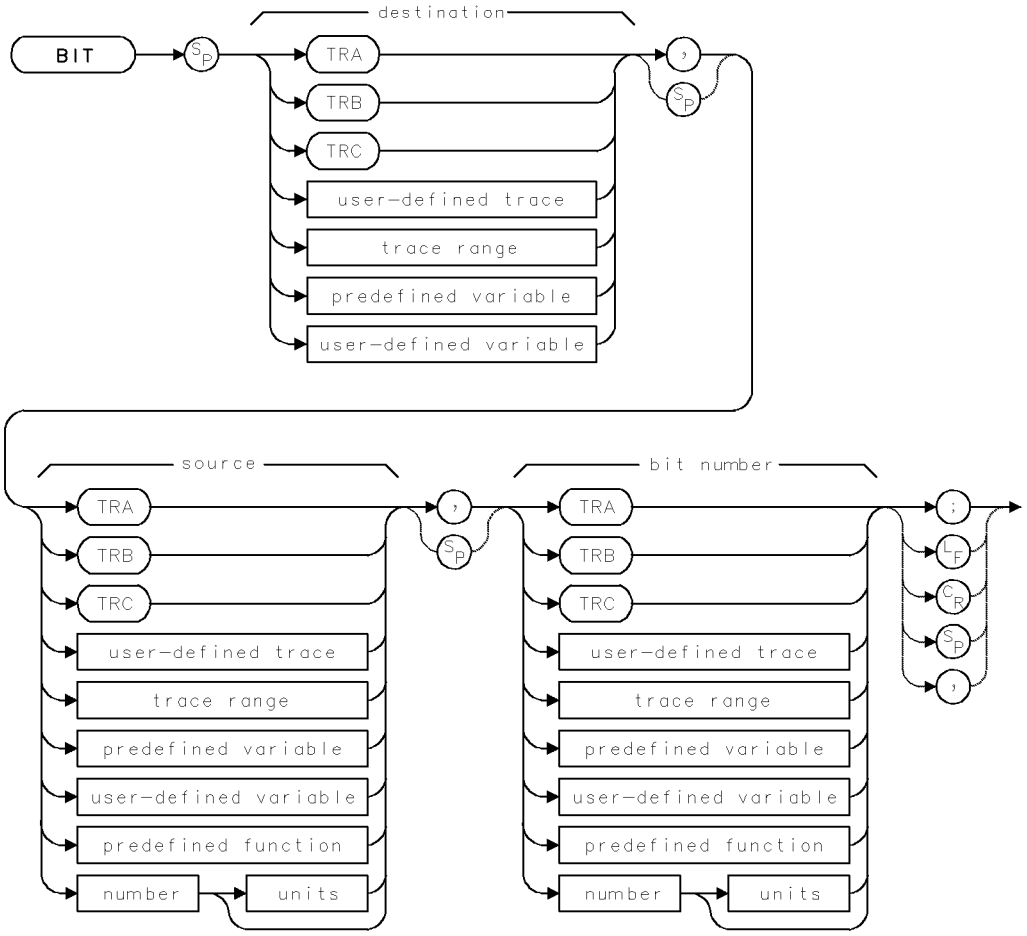


| Item | Description |
|---|---|
| Source or Destination Amplitude Range | 0 – 10,000 measurement units for linear trace data in *TRA*, *TRB*, *TRC*, *trace range*, or *user-defined trace*. –32,768 – +32,767 measurement units for logarithmic trace data in *TRA*, *TRB*, *TRC*, *trace range*, or *user-defined trace*. $\pm$ 1.8 $\times$ $10^{308}$ when using *number*, *predefined variable*, or *user-defined variable*. |
| Destination-Length Range | 1 – 1024 position units. |
| Source-Length Range | 1 – 1024 position units. Default is 800 position units when using TRA, TRB, TRC. Truncated if longer than destination length. If shorter than destination length, last element is extended for operation. |
| Requirements | Be sure data reflects one complete sweep when using *TRA*, *TRB*, *TRC*, or *trace range* for source. SNGLS and TS suggested. TRDEF required when using *user-defined trace*. VARDEF required when using *user-defined variable*. |

## Example

Use the BIT command to learn the value of a bit.

```
140 CLEAR 718                        Initialize analyzer.
150 OUTPUT 718;"IP;"
160 OUTPUT 718;"VARDEF ERROR,0;"     Define user-defined variable ERROR equal to 0.
170 OUTPUT 718;"BIT ERROR,STB,5;"    Store value of bit 5 in ERROR.
180 OUTPUT 718;"ERROR?;"             Return value of ERROR.
190 ENTER 718;Error                  Assign value to computer variable, Error.
200 IF NOT Error THEN DISP NO        If Error equals zero, display "NO" on computer
                                     display.
210 DISP "ERROR PRESENT"             Display "ERROR PRESENT" on computer display.
```

The BIT command stores or returns the state (0 or 1) of a specified bit in the destination.

# BLANK

BLANK TRACE

Stop display of trace, then store trace data.

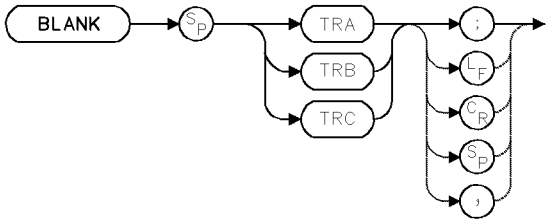


| Item | Description |
|---|---|
| Interdependent Commands | TRPST,TRSTAT |

## Example

Use BLANK to remove unwanted traces from the analyzer display.

```
110 OUTPUT 718;"BLANK TRA;"   Blank trace A.
120 OUTPUT 718;"CLRW TRB;"    Measure with trace B.
```

The BLANK command stops sweeping (updating) the specified trace and deletes it from the display. Any data contained in the trace is stored in **reserved memory**.

# BLANKFT

BLANK LOCAL OSCILLATOR FEEDTHROUGH

Control blanking of the local oscillator feedthrough.

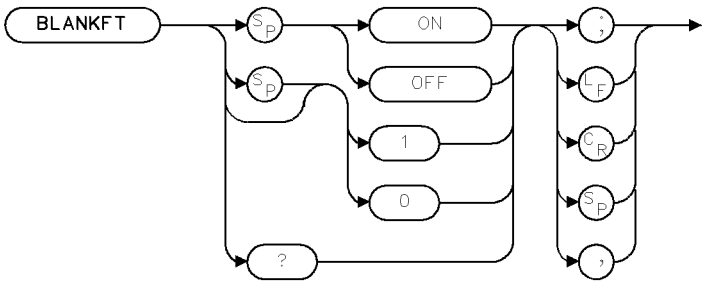


XBLKFT

| Item | Description |
|---|---|
| Preset State | ON only for lightwave path |
| Interdependent Commands | FALIMIT |

## Example

```
OUTPUT 718;"BLANKFT ON;"
```

In a superheterodyne analyzer (such as an HP 71210C microwave spectrum analyzer), there always appears to be a signal present at 0 Hz. This is called “local oscillator feedthrough” and is characteristic of any heterodyne spectrum analyzer. The BLANKFT command causes the analyzer not to display amplitude data in this region near the LO feedthrough. When ON, BLANKFT replaces all trace elements near the local oscillator feedthrough signal with very small amplitude points.

Turning on the BLANKFT command automatically turns off the FALIMIT command if it is on. See FALIMIT.

**Note** Due to frequency inaccuracies within the spectrum analyzer, especially with large frequency spans, the BLANKFT command may blank true signals near the local oscillator feedthrough. To see these signals, use a smaller frequency span or resolution bandwidth setting, turn off the BLANKFT command, or use the FALIMIT command.

The following equation determines the region near the LO feedthrough where the trace is not displayed:

$$10 \times RBW + 2\% \; of span$$

This frequency is never less than 100 kHz and never more than 60 MHz.

## Query Response

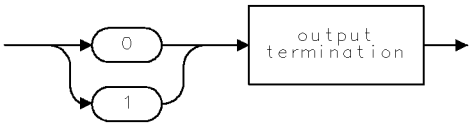


QG01

# BML

B–DL▶B

Subtract display line value from trace B.

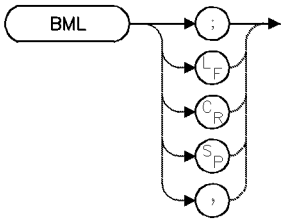


| Item | Description |
|---|---|
| Requirements | Be sure data reflects one complete sweep. SNGLS and TS suggested. |
| Interdependent Commands | TRSTAT, TRPST, VIEW TRDSP, CLRW |

## Example

Use BML to subtract the display line from trace B.

```
110 OUTPUT 718;"BLANK TRA;"            Blank trace A.
120 OUTPUT 718;"SNGLS;"                Activate single-sweep mode.
130 OUTPUT 718;"CF 300MHZ;SP 1MHZ;"    Set measurement range.
140 OUTPUT 718;"DL -10DBM;RL 0 dBm;"   Set display line and reference level.
150 OUTPUT 718;"CLRW TRB;TS;"          Sweep trace B.
160 PAUSE                              press CONTINUE on computer keyboard.
170 OUTPUT 718;"BML;"                  Subtract display line from trace B.
```

The BML command subtracts the display line from trace B, then stores the difference in trace B and places trace B in view mode.

B – display line ▶ B

Be sure trace B contains a complete sweep of measurement information.

# BP

BEEP

Send the “beep” command to the display.

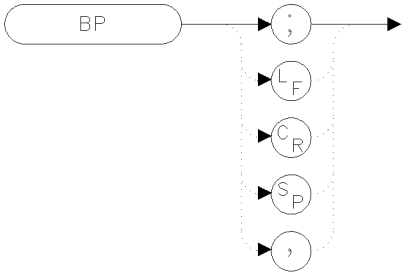


xbp

## Example

```
100 OUTPUT 723;"BP;"
```

The BP command sends the `BP;` command to the display causing a single audible beep. The length and pitch of the tone can not be controlled. If there is no display link, neither a beep or error message occurs.

# BTC

B▶C

Store a copy of trace B in trace C, then store and display trace C contents.

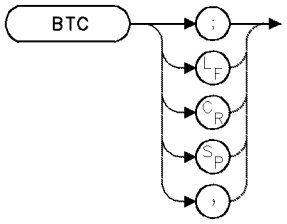


| Item | Description |
|---|---|
| Requirements | Be sure trace data reflects one complete sweep. SNGLS and TS suggested. |
| Interdependent Commands | TRSTAT, TRPST, VIEW, TRDSP, CLRW |

## Example

Use BTC to transfer the contents of trace B to trace C.

```
90 OUTPUT 718;"SNGLS;"                 Activate single-sweep mode.
100 OUTPUT 718;"BLANK TRA;"            Blank trace A.
110 OUTPUT 718;"CF 300MHZ;SP 1MHZ;"    Set measurement range.
120 OUTPUT 718;"CLRW TRB;TS;"          Sweep trace B.
130 OUTPUT 718;"BTC;"                  Transfer trace B to trace C.
```

The BTC command transfers the contents of trace B to trace C, then stops updating trace C by placing it in the view mode.

Be sure trace B contains a complete sweep of measurement information. To retain all data, the length of traces A and B must be equal. Use TRDEF to change trace length, if necessary.

# BXC

EXCHANGE TRACES B AND C

Exchange contents of trace B and trace C.

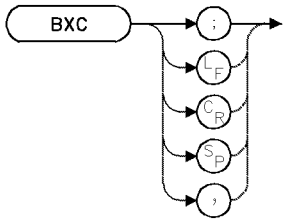


| Item | Description |
|---|---|
| Requirements | Be sure trace data reflects one complete sweep. SNGLS and TS suggested. |
| Interdependent Commands | VIEW, TRSTAT, TRPST, CLRW, TRDSP |

## Example

Exchange the contents of traces B and C using the BXC command.

```
110 OUTPUT 718;"SNGLS;"                  Activate single-sweep mode.
120 OUTPUT 718;"BLANK TRA;"              Blank trace A.
130 OUTPUT 718;"CF 300MHZ;SP 1MHZ;"      Set measurement range.
140 OUTPUT 718;"CLRW TRB;TS;VIEW TRB;"   Sweep trace B and store it.
150 OUTPUT 718;"CONTS;"                  Activate continuous sweeping.
160 OUTPUT 718;"FS;"                     Measure with full span.
170 OUTPUT 718;"CLRW TRC;"               Clear-write trace C.
180 PAUSE                                press CONTINUE on computer keyboard.
190 OUTPUT 718;"BXC;"                    Exchange traces B and C.
```

The BXC command exchanges the contents of traces B and C, then stops updating them by placing them in the view mode.

Be sure each trace contains a complete sweep of measurement information before executing BXC. To retain all data, the size of the traces must be equal. Use TRDEF to change trace length if necessary.

# CAL

CALIBRATE

Execute error-correction routine.

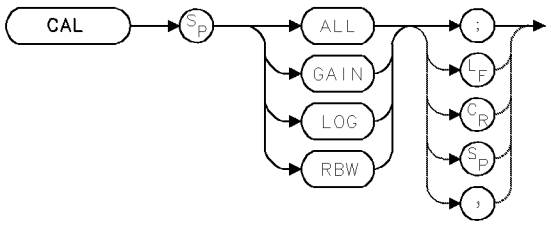


| Item | Description |
|---|---|
| Interdependent Commands | CALFREQ, CALSRC, CALPWR, PINPUT, INPUT |

## Example

Calibrate the analyzer using the CAL command. (This example calibrates HP 71100C modular spectrum analyzer, HP 71200C modular spectrum analyzer, or HP 71210C microwave spectrum analyzer.)

Connect the calibrator signal to the analyzer input.

```
90 CLEAR 718                 Initialize analyzer.
100 OUTPUT 718;"IP;"
110 OUTPUT 718;"CAL ALL;"    Calibrate.
```

The CAL command executes error-correction routines which calculate and apply offset values, called **correction factors**, that compensate for anomalies of the analyzer circuitry. (These correction routines do *not* necessarily perform a complete calibration of the spectrum analyzer after it has been modified by repairs. For complete calibration instructions, see the *HP 70000 Modular Spectrum Analyzer Installation and Verification Manual.*)

**Note** When using the RF INPUT of the lightwave module to calibrate the system, the RF path of the lightwave module is used.

To meet factory specifications, the correction factors must be applied. The routines can be executed individually or all at once:

`CAL LOG` calibrates the logarithmic amplifiers.

`CAL GAIN` calibrates the step gain amplifiers and the attenuator.

`CAL RBW` calibrates the amplitude and frequency of the resolution bandwidth filters. (See CALCOR.)

`CAL ALL` executes all three of the above routines.

If the routines are executed individually, execute `CAL LOG` first to achieve best results.

An internal or external calibration signal must be connected or switched to the analyzer before the routines are executed. If a signal is not connected, an error condition results. Use the CALCOR command to deactivate the correction factors.

# CALCOR

CALIBRATION CORRECTION FACTORS

Remove applied error corrections individually.

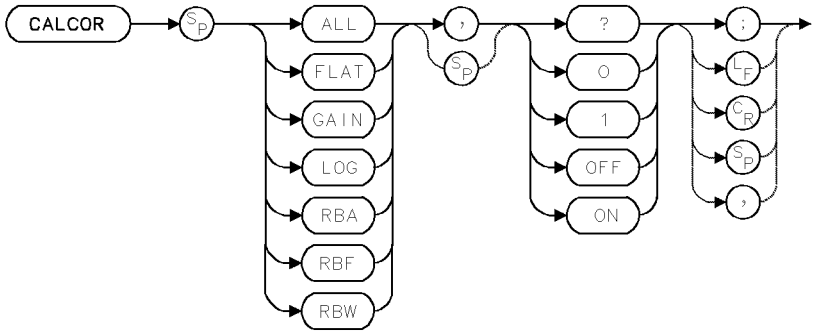


| Item | Description |
|---|---|
| Interdependent Commands | CALFREQ, CALPWR, CALSRC, PINPUT, INPUT, CAL |
| Preset State | CALCOR ALL,ON |

## Example

Turn off the frequency-related correction factors for the resolution bandwidth filters.

```
150 OUTPUT 718;"CALCOR RBF,OFF;"
```

## Example

Return the status of the log fidelity correction factor.

```
170 OUTPUT 718;"CALCOR LOG,?;"   Return status of log fidelity correction factor.
180 ENTER 718;A                  Assign response (1 or 0) to computer variable.
```

The CALCOR command disables the **correction factors** computed by the CAL command. The factors can be disabled or re-enabled individually or all at once:

CALCOR FLAT,OFF disables the frequency-dependent gain correction factors that compensate for irregularities in the mixer and attenuator.

CALCOR GAIN,OFF disables the correction factors for the step gain amplifiers and the attenuator.

CALCOR LOG,OFF disables the correction factors for the logarithmic amplifiers.

CALCOR RBW,OFF disables both the amplitude and frequency correction factors, which improve the amplitude and frequency accuracy of displayed measurement results by compensating for irregularities in the IF resolution bandwidth filters.

CALCOR RBA,OFF disables the CALCOR RBW correction factors (see above) that compensate for the amplitude irregularities in the resolution bandwidth filters.

CALCOR RBF,OFF disables the CALCOR RBW correction factors (see above) that compensate for the frequency irregularities in the resolution bandwidth filters. Execute CALCOR RBF,OFF to eliminate the frequency correction and improve the frequency accuracy of the source

output available at the front panel of the tracking-generator module, especially when using resolution bandwidths of 10 kHz or greater.

`CALCOR ALL,OFF` disables all correction factors.

During normal operation, all correction factors are on. Disable the factors during special applications, or when you wish to supply your own calibration procedure.

## Query Response

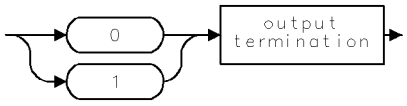

# CALFREQ

CALIBRATION FREQUENCY

Specify frequency of reference signal used by error-correcting routine, CAL.

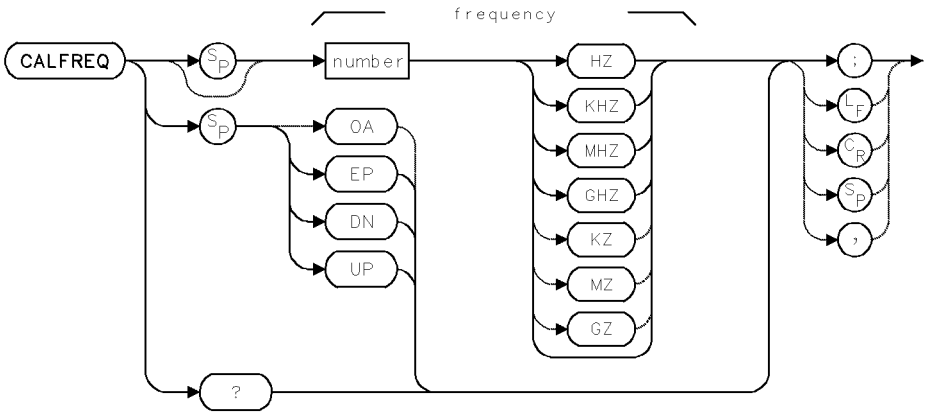


| Item | Description |
|---|---|
| Frequency Range | 0 – 1000 GHz |
| Step Increment | 10% of span |
| Interdependent Commands | CALPWR, CALSRC, PINPUT, INPUT, PINPUT, CAL |
| Preset State | Depends on hardware and PINPUT setting:<br>`CALFREQ 321.4MHZ` when IF INPUT on HP 70907A/B external millimeter interface module is active.<br>`CALFREQ 300MHZ` when RF INPUT on HP 70904A RF section, HP 70905A/B RF section, HP 70906A/B RF section, HP 70908A RF section, or HP 70909A or HP 70910A RF section is active. |

## Example

Specify a new frequency for the calibration reference.

```
150 OUTPUT 718;"CALFREQ 400MHZ;"    Calibrate to 400 MHz.
```

The CALFREQ command specifies the frequency of the calibration reference used by the CAL command. The frequency of the calibration reference has several default values, depending on the configuration of the spectrum analyzer. (See previous table.) Use CALFREQ to specify a different calibration frequency.

The PINPUT, IP, and INPUT commands determine which input is active.

## Query Response

# CALPWR

CALIBRATION POWER

Specify power level of reference signal used by error-correcting routine, CAL.

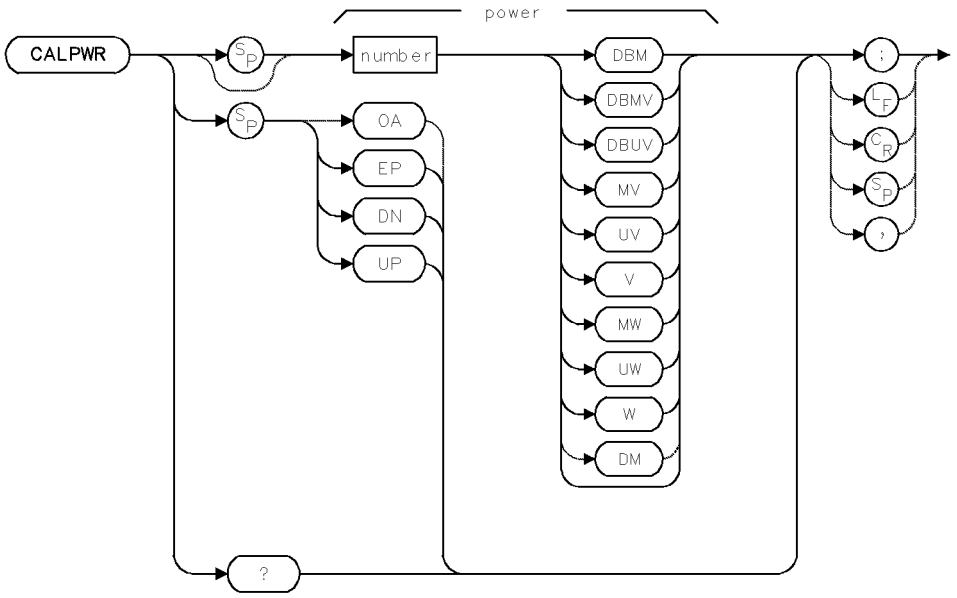


| Item | Description |
|---|---|
| Power Range | Minimum level is −300 dBm. Maximum level determined by<br>Maximum-input level setting (MIL)<br>Maximum-mixer level setting (ML)<br>Reference-level position setting (RLPOS)<br>Amplitude scale (LOG or LN) |
| Step Increment | 1 major vertical-scale division |
| Interdependent Commands | CAL, CALCOR, PINPUT, INPUT, CALFREQ, CALSRC |
| Preset State | Depends on hardware and PINPUT setting.<br>`CALPWR −35DBM` when IF INPUT on HP 70907A/B external millimeter interface module is active.<br>`CALPWR −10DBM` when RF INPUT on HP 70904A RF section, HP 70905A/B RF section, HP 70906A/B RF section, HP 70908A RF section, or HP 70909A or HP 70910A RF section is active. |

## Example

Specify a new power level for the calibration reference.

```
140 OUTPUT 718;"CALPWR -15DBM;"      Specify –15 dBm as the power level of the calibrator reference.
150 OUTPUT 718;"CALPWR?;"            Return value to computer.
160 ENTER 718;N                      Assign value to computer variable.
170 PRINT "Calibrate to ";N;"dBm"    print value on computer display.
```

The CALPWR command specifies the power of the calibration reference used by the CAL command. The power of the calibration reference has several default values, depending on the configuration of the spectrum analyzer. (See previous table.) Use CALPWR to specify a different calibration power.

The PINPUT, IP, and INPUT commands determine which input port is active.

## Query Response

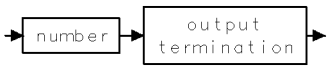

# CALSRC

CALIBRATION SOURCE

Specify internal or external reference signal used by error-correcting routine, CAL.

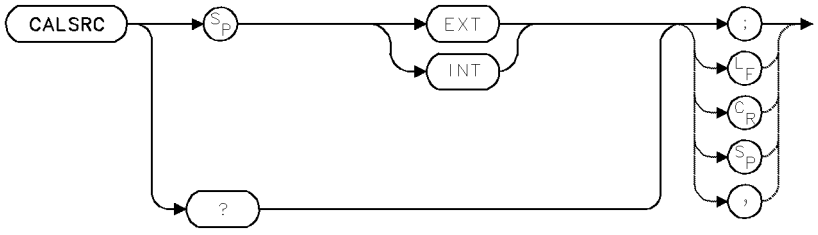


| Item | Description |
|---|---|
| Interdependent Commands | CAL, CALFREQ, CALPWR, CALCOR, PINPUT, INPUT |
| Preset State | Depends on hardware and PINPUT setting:<br>`CALSRC INT` when IF INPUT on HP 70907A/B external millimeter interface module is active.<br>`CALSRC EXT` when RF INPUT on HP 70904A RF section, HP 70905A/B RF section, HP 70906A/B RF section, HP 70908A RF section, or HP 70909A or HP 70910A RF section is active. |

## Example

Configure the analyzer to calibrate with an external calibration signal.

```
170 OUTPUT 718;"CALSRC EXT;"    Specify an external calibration reference.
```

The CALSRC command switches between an internal or external calibration reference, which is used by the CAL command. When the RF INPUT port to the HP 70904, HP 70905, HP 70906, or HP 70908 RF Section is active, the spectrum analyzer calibrates with the signal present at the RF INPUT. In addition, the CALFREQ and CALPWR are set automatically to 300 MHz and −10 dBm, respectively. When the IF INPUT port on the HP 70907 External Mixer Interface Module is active, the spectrum analyzer calibrates with the internal reference inside the interface module. CALFREQ and CALPWR are set to 321.4 MHz and −35 dBm.

The PINPUT command determines which input is active after the instrument is preset. Use the INPUT command to activate other inputs.

**CALSRC**

Use CALSRC to change the internal/external setting from its preset value. Use the CALFREQ and CALPWR to change the calibration frequency and power from its preset values.

## Query Response

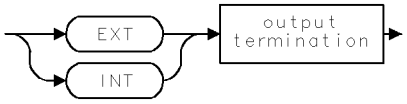

# CATALOG

CATALOG

Return the catalog in a condensed format.

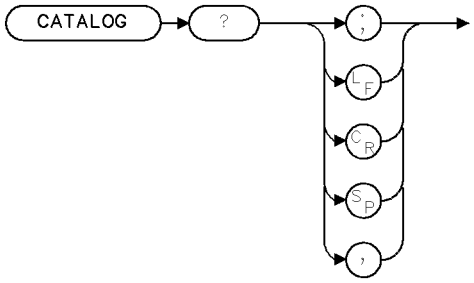


XCATAL

| Item | Description |
|---|---|
| Restrictions | Name and filetype are restricted to a maximum number of 15 characters; otherwise, both fields are truncated. |
| Interdependent Commands | DSPTEXT |

The CATALOG command returns the catalog in a condensed format as follows:

```
0917504,0914480          total mem, avail mem
CONFIG,CONFIG,0005992    filename,filetype,filesize

LARGEST,LARGEST,0911438
FOO,FUNC 00011
FRED,VAR 00008
```

**Note** If the file size is greater than 99,999 bytes, the size will be in kilobytes and indicated by a "K" suffix.

The filetypes are categorized as follows:

| | |
|---|---|
| **CONFIG** | internal configuration data space |
| **LARGEST** | largest contiguous data space available |
| **FUNC** | FUNCDEF storage area |
| **VAR** | VARDEF storage area |
| **TRACE** | user-defined trace storage area |
| **ASCII** | data storage area for instrument states, stored traces A, B, or C, stored user keys, and any data stored to a memory card. |
| **AFUNC** | user-defined active function (see the ACTDEF command) |
| **PROG** | HP generated personality or program |
| **APROG** | HP generated active function |

**Note** If the system has DEBUG ON, the format is modified to give more information on actual file status. With DEBUG ON the output will be:

```
0917504,0914480
CONFIG,CONFIG, 0005992
LARGEST,LARGEST,0911438
,AG 00042
FOO,G 000040
FRED,G 000056
```

The format for all non-system files is as follows:

<filename>,<file status> <total memory used>

where

<filename> is the name of one of the files listed above.

<file status> will be one or more of the following letters:

| | |
|---|---|
| A | indicates the memory block that is available. |
| D | indicates the memory block that has been disposed. If the block is in use, it is marked and disposed of as soon as it is no longer in use. |
| G | indicates the memory block is good (that is, a real block with valid data). |
| P | indicates the memory block is protected. The user has protected the block to prevent it from being disposed. If memory is formatted or erased, these blocks will be removed. |
| * | indicates the memory block is in use. Either an HP generated function is using the block, or a downloadable program (DLP) is currently being executed. |

The following items should be noted when using the CATALOG command with DEBUG ON.

- The listing reflects the ordering and structure of what is physically in memory as opposed to what is indicated in the sorted table. Therefore some understanding of how the memory manager manipulates, resizes, and moves around these memory blocks is sometimes needed to understand what is shown.
- Instead of stepping down through the table, the listing uses pointers stored within each block to locate the next block. A successful catalog listing verifies that the pointers are all correct.
- The size represents the entire size of the block (as calculated from the internal pointers), not just the user data area. A block includes the above-mentioned pointers, the name, the data type, and so on.
- Instead of showing the data type, the block's status as used by the memory manager is displayed. Refer to the <file status> letter descriptions above.
- Normally the garbage collection routine is run before a catalog listing is displayed. This is not done when DEBUG is turned ON.

## Query Response

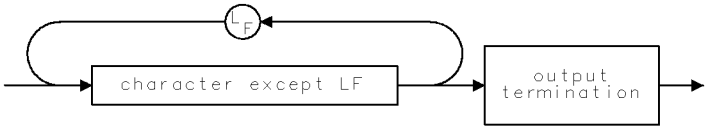


QCHAR

# CF

CENTER FREQUENCY

Set center frequency of measurement range.

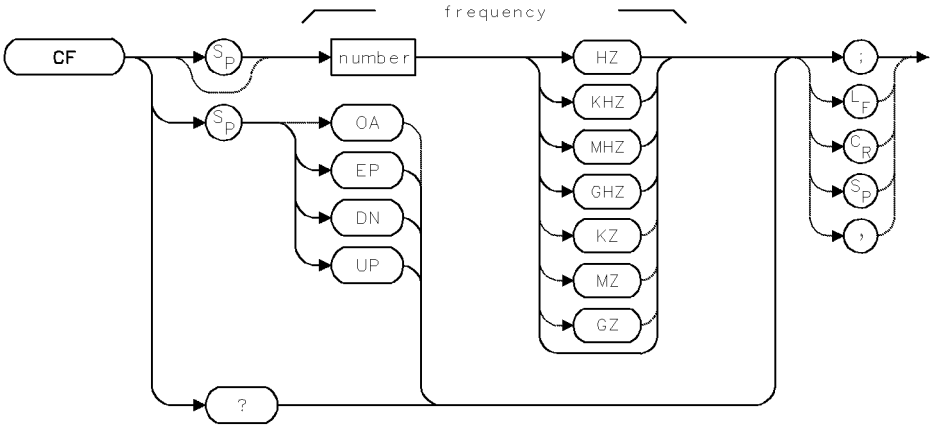


| Item | Description |
|---|---|
| Frequency Range | Actual range is hardware dependent. Firmware range is ±1000 GHz. |
| Step Increment | Determined by SS command. |
| Requirements | Update trace data after executing CF. |
| Interdependent Commands | SS, FA, FB, LOSTART, LOSTOP, HNLOCK, MKSS, FS, SP, FOFFSET |
| Preset State | (highest possible stop frequency – lowest possible start frequency)÷2 |

## Example

Set the center frequency.

```
110 OUTPUT 718;"CF 600 MHZ;"      Set center frequency to 600 MHz.
120 OUTPUT 718;"CF UP;"           Increase center frequency by 10% of span.
130 OUTPUT 718;"CF?;"             Return center frequency value to computer.
140 ENTER 718;A                   Assign value to computer variable.
```

The CF command sets the center frequency. The span remains constant. The center-frequency and the start- and stop-frequency settings are related as follows:

center frequency = (stop frequency + start frequency)÷2

`CF UP` and `CF DN` increase or decrease the center frequency by increments determined by the step function, SS.

## Query Response

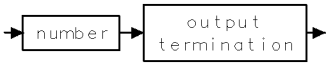

# CHEIGHT

CHARACTER HEIGHT

Return the character height.

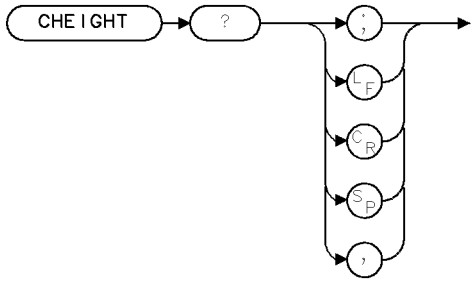


XCHEIG

| Item | Description |
|---|---|
| Preset State | full window, 4.34 |
| Interdependent Commands | TEXT, CWIDTH, PA, PR |

The CHEIGHT query computes and returns the character height as a percentage of the window height. This command is necessary for programs that want to adjust their graphics and TEXT displays depending on the window size. The characters remain the same size regardless of what size the window is.

## Query Response

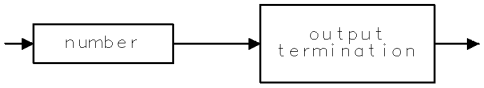


QNUM

# CLRDSP

CLEAR DISPLAY

Clear spectrum analyzer graphics from memory, then set graphics parameters to default values.

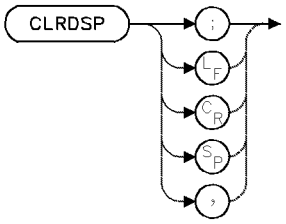


| Item | Description |
|---|---|
| Interdependent Commands | IT, OR, SCALE, DWINDOW, TEXT, DSPLY, PA, PR, PD, LINET, PU |

## Example

Clear the analyzer of user-created graphics.

```
90 CLEAR 718                        Initialize analyzer.
100 OUTPUT 718;"IP;"
110 OUTPUT 718;"PU;PA 300,900;"     place pen at (300,900).
120 OUTPUT 718;"TEXT$WARNING$;"     Write text.
130 OUTPUT 718;"WAIT 4S;"           Wait four seconds.
140 OUTPUT 718;"CLRDSP;"            Clear graphics.
```

The CLRDSP command removes all spectrum analyzer graphics from the display and its memory. CLRDSP executes the following:

- Deletes all items from memory (IT).
- Turns off the reference-graphics mode (`IT 0`).
- Removes all graphic offsets (OR).
- Sets the scale of the X-Y coordinates to 0 to 1000 for both X and Y (SCALE).
- Sets the origin to 0,0 (OR).
- Deletes all **graphics window**s (DWINDOW).
- Deletes text displayed by the TEXT command (*not* by the TITLE command).
- Deletes numbers displayed with the DSPLY command.

# CLRPAVG

CLEAR POWER AVERAGE

Reset the power meter averaging count.

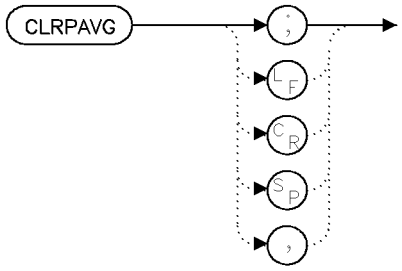


clrpavg

| Item | Description |
|---|---|
| Inter-Dependent Commands | PWRAVG, CPLAVG, VAVG |

## Example

CLRPAVG; Restart the averaging process for PWRAVG.

The CLRPAVG command resets the count and restarts the averaging.

# CLRW

CLEAR WRITE

Continuously measure and store detected signals.

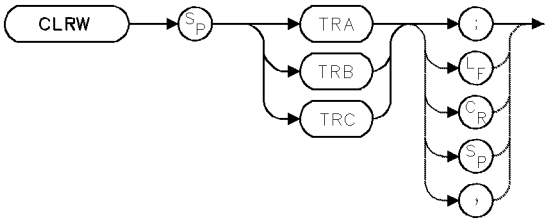


| Item | Description |
|---|---|
| Interdependent Commands | TRPST, BML, BTC, BXC, TRSTAT, AMB, AMBPL, AMC, AXB, TRDSP |
| Preset State | `CLRW TRA` |

## Example

Measure with trace C.

```
110 OUTPUT 718;"BLANK TRA;"     Blank trace A.
120 OUTPUT 718;"CLRW TRC;"      Measure with trace C.
```

The CLRW command enables the clear-write mode, which continuously measures and stores any signals present at the spectrum analyzer input port when the trigger conditions for the sweep are met. If the spectrum analyzer has a display, measurement results are continuously displayed during the clear-write mode.

CLRW operates on trace A, B, or C. CLRW initially clears the selected trace, setting the amplitude of all trace elements equal to the bottom graticule-line value. The trigger then signals the start of the sweep and the trace is updated continuously as the sweep progresses.

# CLS

CLEAR STATUS BYTE

Set all bits in **status-byte register** to zero.

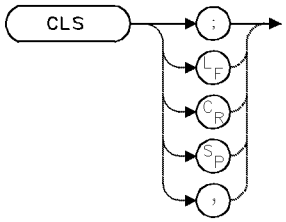


| Item | Description |
|---|---|
| Interdependent Commands | RQS, SRQ, STB |

## Example

Clear status-byte.

```
10 OUTPUT 718;"CLS;"
```

The CLS command sets all bits in the status-byte register to 0. See RQS, SRQ, and STB; or refer to “Monitoring System Operation” in the Programming Fundamentals chapter.

# CNVLOSS

CONVERSION LOSS

Offset absolute amplitude scale by adjusting the gain of the spectrum analyzer.

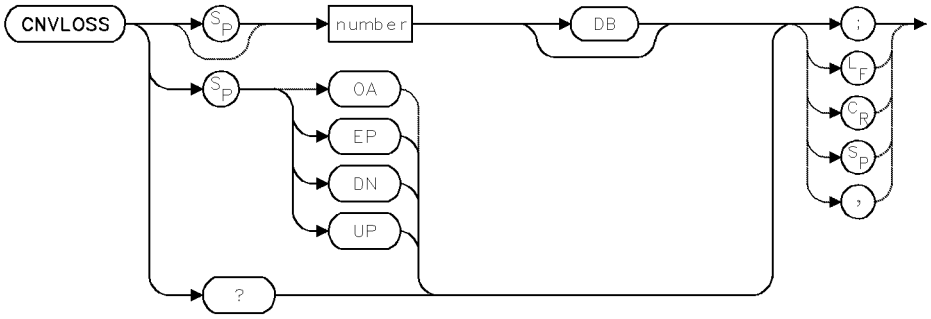


| Item | Description |
|---|---|
| Conversion-Loss Range | ± 100 dBm |
| Step Increment | 1 vertical scale division during log mode. 1 vertical scale division at top of display during linear mode (.915 dB). |
| Requirements | Update trace data after executing CNVLOSS. |
| Interdependent Commands | INPUT, PINPUT, TRA, TRB, TRC, AMPCOR, and marker functions. |
| Preset State | Depends on hardware and PINPUT setting:<br>`CNVLOSS 30DB` when IF INPUT on HP 70907 External Mixer Interface Module is active.<br>`CNVLOSS 0 dB` when RF INPUT on HP 70904, 70905, 70906, or 70908 is active. |

## Example

Offset reference-level value.

```
40 OUTPUT 718;"CNVLOSS 25DB;"      Set conversion loss to 25 dB.
50 OUTPUT 718;"CNVLOSS DN;"        Reduce conversion loss by one step increment.
60 OUTPUT 718;"CNVLOSS?;"          Return conversion-loss value to computer.
70 ENTER 718;N                     Assign value to computer variable.
```

The CNVLOSS command offsets the reference level to compensate for amplitude losses at the active input port. Use CNVLOSS for most external-mixer applications. To clear the offset, enter a conversion loss of zero.

## Query Response

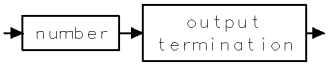

# COMPRESS

COMPRESS

Reduce trace length while retaining relative frequency and amplitude characteristics of trace data.

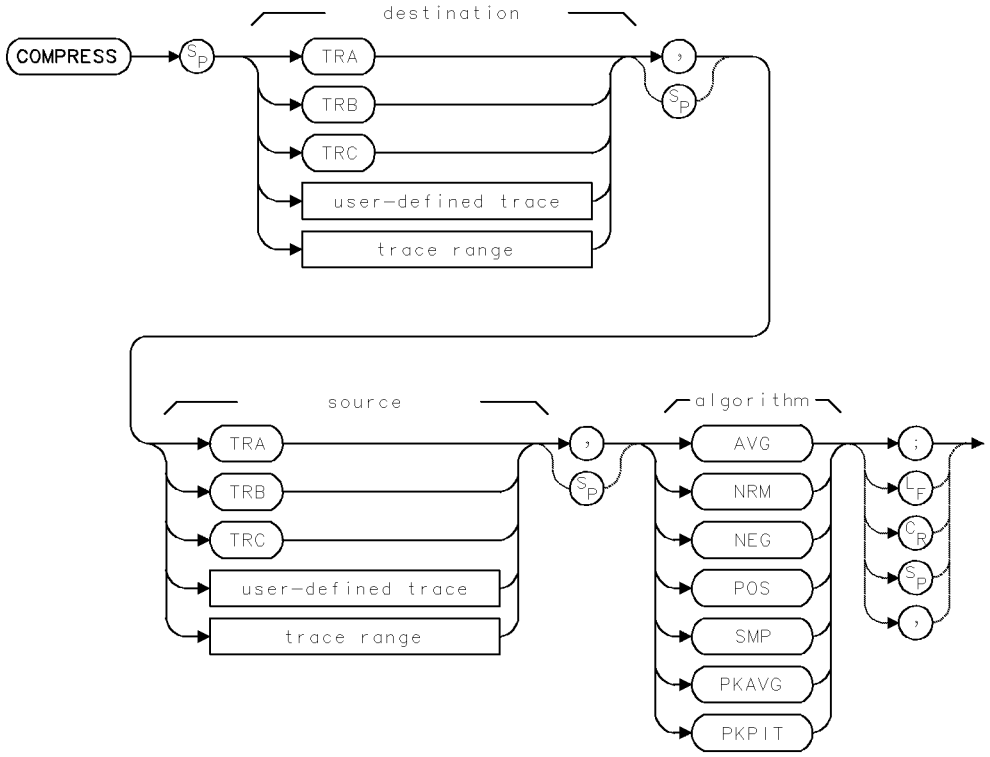


| Item | Description |
|---|---|
| Source or Destination Length Range | 3 – 1024 position units. |
| Source or Destination Amplitude Range | 0 – 10,000 measurement units for linear trace data. –32,768 – +32,767 measurement units for logarithmic trace data. |
| Requirements | Be sure data reflects one complete sweep when using *TRA*, *TRB*, *TRC*, or *trace range* for source. SNGLS and TS suggested. TRDEF required when using *user-defined trace*. |

## Example

Compress trace data.

```
110 OUTPUT 718;"CF 3E8;SP 7E8;"          Set measurement range.
120 OUTPUT 718;"TRDEF TRC,100;"          Change length of trace C to 100 elements.
130 OUTPUT 718;"BLANK TRA;SNGLS;"        Blank trace A. Activate single-sweep mode.
140 OUTPUT 718;"CLRW TRB;TS;"            Measure with trace B. Sweep measure-
                                         ment range.
150 OUTPUT 718;"COMPRESS TRC,TRB,POS;"   Compress trace C to fit trace B.
160 OUTPUT 718;"BLANK TRB;"              Blank trace B.
170 OUTPUT 718;"VIEW TRC;"               View trace C.
```

The COMPRESS command stores a compressed copy of the source trace in a smaller destination trace. The source trace is divided into the same number of intervals as points in the destination trace. The data within each source interval is compressed into a single value for the corresponding destination trace point.

For example, if the source trace is 1000 points long, and the destination trace is 100 points long, COMPRESS divides the source trace into 100 ten-point intervals and computes a compressed value for each interval according to the compression algorithm selected. The compressed value for the first interval becomes the amplitude of the first point in the destination trace. The 99 remaining compressed values determine the amplitude of the last 99 points of the destination trace.

The compression algorithms are as follows:

`COMPRESS AVG` selects the average value of the points in each interval.

`COMPRESS NEG` selects the lowest value in each interval.

`COMPRESS POS` selects the highest value in each interval.

`COMPRESS NRM` computes the compressed value of each interval according to the Rosenfell algorithm. The Rosenfell algorithm is a combination of positive- and negative-peak detection, where the minimum value detected in one interval is displayed alternately with the maximum value detected in the previous two intervals. Signals that occur within the interval are displayed, even if they occur within an interval that displays the minimum value (as a result of negative-peak detection). Thus, broadband or impulsive signals less than an interval wide are captured and displayed.

`COMPRESS PKAVG` selects the difference of the peak and the average value of the points in the interval.

`COMPRESS PKPIT` (peak-pit) selects the difference between the positive and negative peaks in the interval.

`COMPRESS SMP` (sample) selects the last point in the interval.

# CONCAT

CONCATENATE

Join two traces to make one trace.

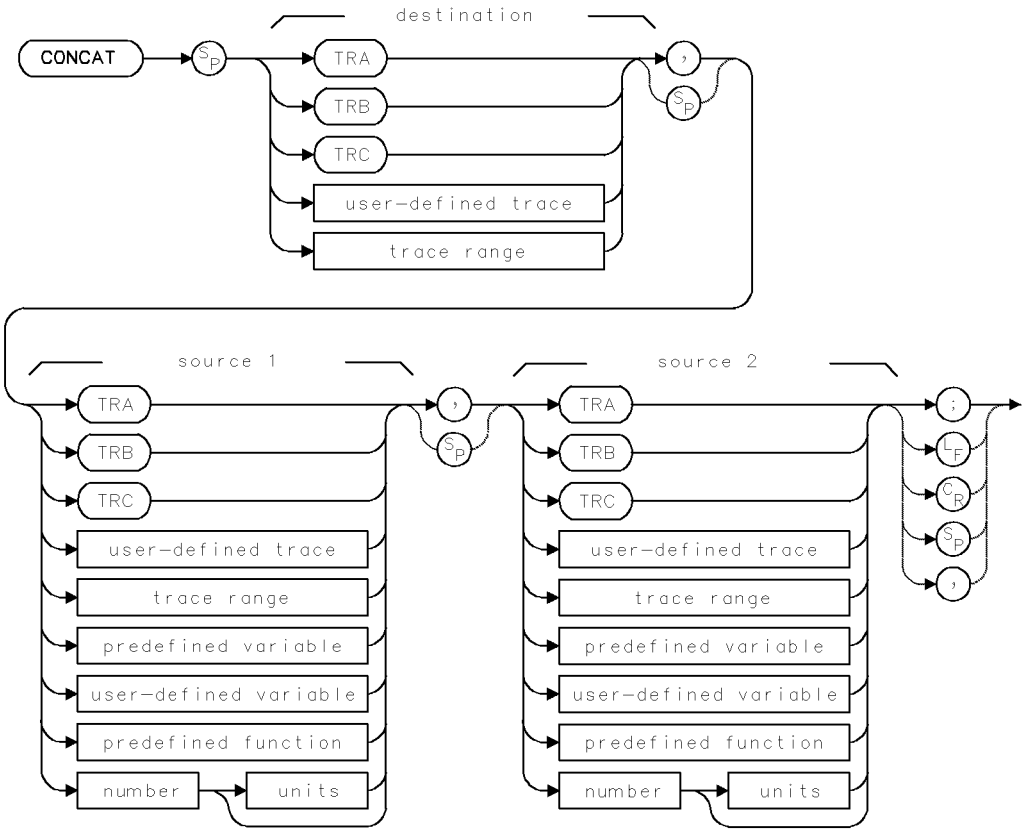


| Item | Description |
|---|---|
| Source or Destination Amplitude Range | 0 – 10,000 measurement units for linear trace data in *TRA*, *TRB*, *TRC*, *trace range*, or *user-defined trace*. –32,768 – +32,767 measurement units for logarithmic trace data in *TRA*, *TRB*, *TRC*, *trace range*, or *user-defined trace*. $\pm$ 1.8 $\times$ $10^{308}$ when using *number*, *predefined variable*, or *user-defined variable*. |
| Source-Length Range | 1 – 1024 position units. Default is 800 position units when using *TRA*, *TRB*, *TRC*. Truncated if sum of sources is longer than destination length. If shorter than destination length, last element is extended for operation. |
| Destination-Length Range | 1 – 1024 position units. |
| Requirements | Be sure data reflects one complete sweep when using *TRA*, *TRB*, *TRC*, or *trace range* for source. SNGLS and TS suggested. TRDEF required when using *user-defined trace*. VARDEF required when using *user-defined variable*. |
| Interdependent Commands | TS, COMPRESS, TRDEF, TRA, TRB, TRC |

## Example

Concatenate two traces.

```
130 OUTPUT 718;"SNGLS;"          Activate single-sweep mode.
140 OUTPUT 718;"DET POS;"        Activate positive-peak detection.
150 OUTPUT 718;"TS;VIEW TRA;"    Sweep measurement range. Storeand view trace A.
160 OUTPUT 718;"DET NEG;"        Activate negative-peak detection.
170 OUTPUT 718;"CLRW TRB;"       Measure with trace B.
180 OUTPUT 718;"TS;VIEW TRB;"    Sweep measurement range. Store and view trace B.
190 OUTPUT 718;"WAIT 2S;"        Wait two seconds.

200 OUTPUT 718;"CONCAT TRC,TRA[1,400],TRB[401,800];"
```

*Concatenate last half of trace B to end of first half of trace A. Store new array in trace C.*

```
210 OUTPUT 718;"BLANK TRA;"    Blank trace A.
220 OUTPUT 718;"BLANK TRB;"    Blank trace B.
230 OUTPUT 718;"VIEW TRC;"     Store and view new trace data (trace C).
```

The CONCAT command concatenates source 2 to the end of source 1, then stores the new array in the destination.

The size of the destination and sources can vary from 3 to 1024 points. If necessary, reduce trace lengths with COMPRESS, TRA, TRB, TRC, or TRDEF. Otherwise, the concatenated array may not fit in the destination and trace information is lost.

# CONFIG

CONFIGURATION

Return the model numbers and HP-MSIB addresses of all modules.

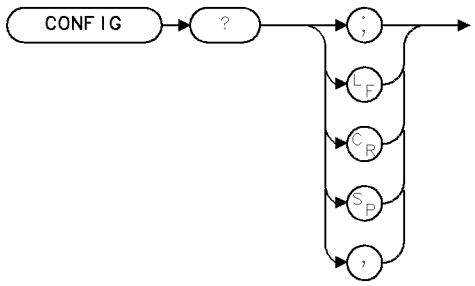


XCONFI

| Item | Description |
|---|---|
| Interdependent Commands | DSPTEXT CONFIG |

The CONFIG query returns a series of ASCII strings, separated by carriage returns, indicating all system module model numbers and their corresponding HP-MSIB addresses. The format is as follows:

<model number>,<MSIB row number>,<MSIB column number>

An example of the CONFIG query response is:

70900A,0,18
70902A,2,18
70903A,4,18
70904A,6,18

## Query Response

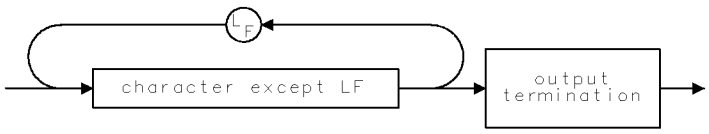


QCHAR

# CONTS

CONTINUOUS SWEEP

Sweep continuously each time the trigger conditions are met.

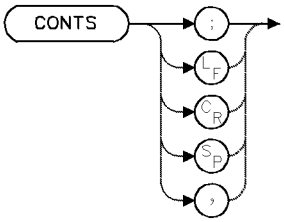


| Item | Description |
|---|---|
| Interdependent Commands | TM, VTL, VTH, SNGLS, TRPST |

## Example

Activate continuous sweeping.

```
120 OUTPUT 718;"CF 300MHZ;SP 1MHZ;"
130 OUTPUT 718;"SNGLS;"                 Activate single-sweep mode.
140 DISP "PRESS CONTINUE"               press CONTINUE on computer keyboard.
150 PAUSE                               Activate continuous sweep.
160 DISP ""
170 OUTPUT 718;"CONTS;"
```

The CONTS command activates the continuous-sweep mode where the analyzer sweeps continuously as long as the trigger and data-entry conditions are met.

Executing `CONTS` aborts the current sweep to start a new one.

# CORTOLIM

AMPLITUDE CORRECTION TO LIMIT LINES

Transfer AMPCOR data to a limit line.

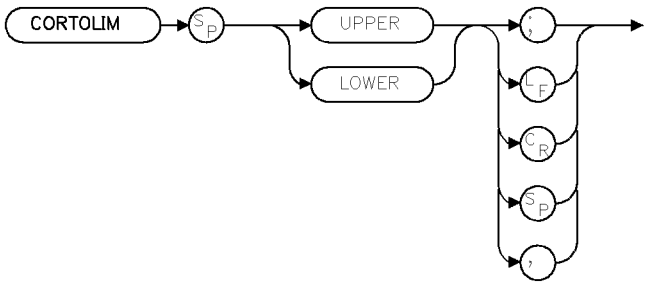


XCORTO

| Item | Description |
|---|---|
| Interdependent Commands | AMPCOR, LIMTOCOR |

## Example

```
10 OUTPUT 718;"CORTOLIM UPPER;"
```

*Transfer amplitude-correction data into the upper limit line.*

The CORTOLIM command transfers data to the specified limit line. This allows the AMPCOR data to be viewed or edited. Use LIMTOCOR to bring the edited data back to the amplitude-correction storage.

# COUPLE

COUPLE

Select direct-current coupling or alternating-current coupling.

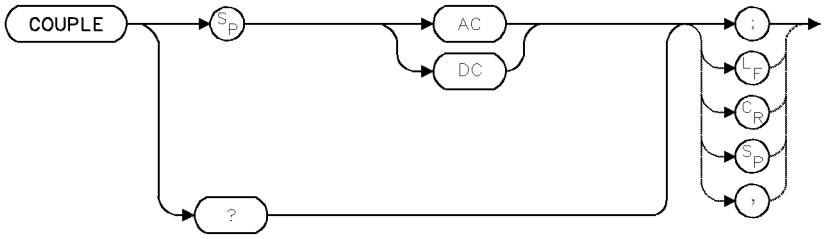


| Item | Description |
|---|---|
| Requirements | Requires RF section that supports coupling options. |
| Interdependent Commands | INPUT, PINPUT |
| Preset State | Depends on hardware and PINPUT setting:<br>`COUPLE AC` when RF INPUT on HP 70904 RF Section is active.<br>`COUPLE DC` when RF INPUT on 70905, 70906, or 70908 is active. |

## Example

Activate ac coupling.

```
10 OUTPUT 718;"COUPLE AC;"
```

The COUPLE command activates ac or dc coupling for the active input port. The ac and dc coupling are not available on all RF sections.

## Query Response

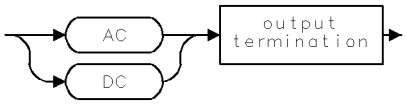

# CPLAVG

COUPLE AVERAGE

Control the coupling between VAVG and PWRAVG.

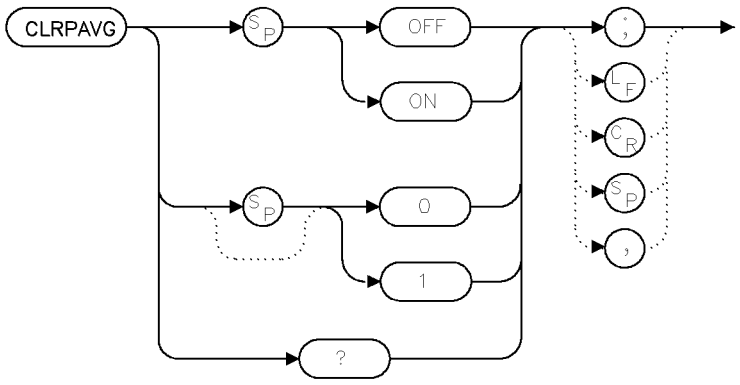


cplavg

| Item | Description |
|---|---|
| Inter-Dependent Commands | PWRAVG, CLRPAVG, VAVG |
| Preset State | ON |

## Example

```
CPLAVG ON;   Turn on the coupling between VAVG and PWRAVG.
CPLAVG OFF;  Turn on the coupling between VAVG and PWRAVG.
CPLAVG 1;    Same as CPLAVG ON; .
CPLAVG 0;    Same as CPLAVG OFF; .
CPLAVG?      Report the current coupling state (0/1).
```

CPLAVG allows the operations of PWRAVG and VAVG to be coupled. If this coupling is on, turning on or off one of the averagings will turn the other on or off as well. In addition, the configured average count will be forced to be the same. When the coupling is turned on, the VAVG values are used to set the PWRAVG values.

The VAVG and PWRAVG counts are displayed in the middle left of the graticule area. The VAVG count is preceeded by the label "VIDAVG" and the PWRAVG count is preceeded by the label "PWRAVG".

The rate at which the average count increments for PWRAVG and VAVG may differ since multiple power meter readings may be taken per sweep.

If an attempt is made to turn PWRAVG for a signal path which does not have a power meter, a "Hardware not present" error will be reported.

## Query Response

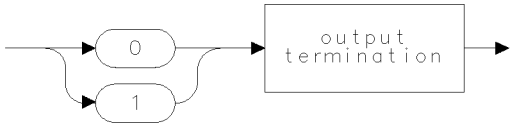


qgen0

# CPLDET

COUPLE DETECTOR

Control the coupling between LG, LN, and DETSEL.

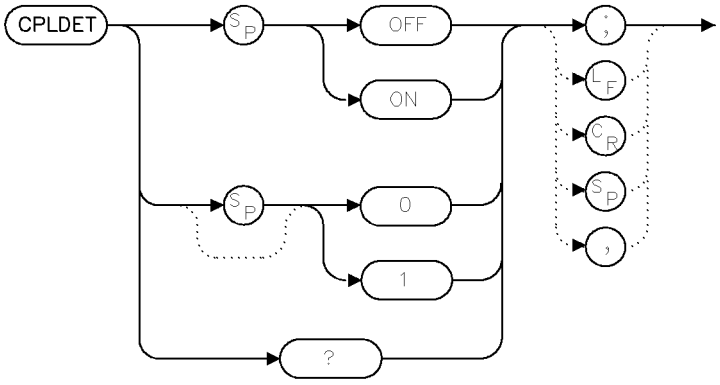


cpldet

| Item | Description |
|---|---|
| Restrictions | CPLDET can be set and queried if there is not a linear detector in the system, but the coupling value has no effect. |
| Inter-Dependent Commands | LG, LN, DETSEL |
| Preset State | ON |

## Example

```
CPLDET ON;   Turn on coupling between LG/LN and DETSEL.
CPLDET OFF;  Turn off coupling between LG/LN and DETSEL.
CPLDET 1;    Same as CPLDET ON; .
CPLDET 0;    Same as CPLDET OFF; .
CPLDET?      Report the current coupling state (0/1).
```

CPLDET allows the operations of LG/LN and DETSEL to be coupled. If this coupling is on, setting the display mode via LG will do an effective DETSEL LOG. Similarly, LN (with any non-query argument) will do an effective DETSEL LINV. When the coupling is turned on, the current LG/LN state is used to determine what the proper DETSEL state should be.

## Query Response

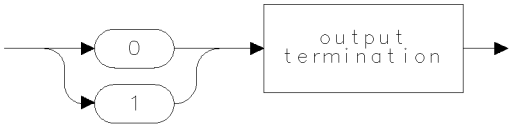


qgen0

# CWIDTH

CHARACTER WIDTH

Return the character width as a percentage of the window width.

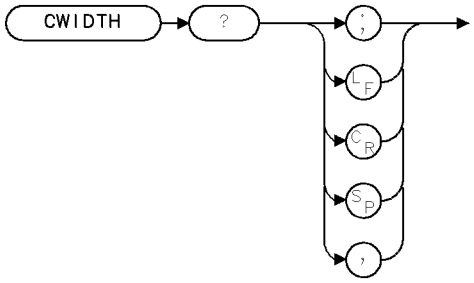


XCWID

| Item | Description |
|---|---|
| Preset State | full window, 1.87 |
| Interdependent Commands | CHEIGHT, TEXT, PA, PR |

The CWIDTH query computes and returns the character height as a percentage of the window size. This allows a downloadable program (DLP) to determine the size of the display window and adapt the text to fit. The units of the number returned is percent.

For example, executing the CWIDTH query on a full-screen window display returns 1.87. That is, the character width is 1.87% of the window width where the window is 53 (100 ÷ 1.87) characters wide.

## Query Response

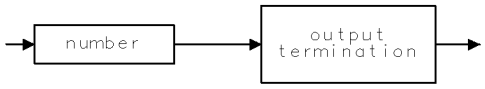


QNUM

# DA

DISPLAY ADDRESS

Set the display memory access address (HP 8566B spectrum analyzer compatibility).

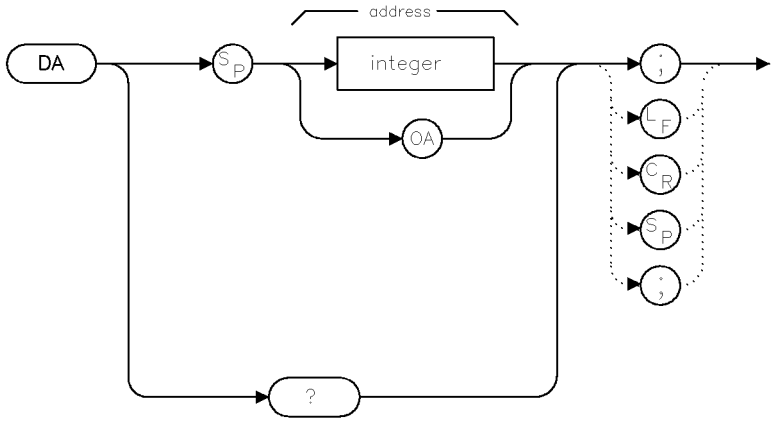


da

| Item | Description |
|---|---|
| Range | [0,4095] |
| Inter-Dependent Commands | KS126 |
| Preset State | 3072 |

## Example

```
DA 1025;  Set the display address to the first point of trace A.
DA?       Output the current display address.
DA OA;    Output the current display address. (Same as DA?.)
```

This command is for remote programming compatibility with the HP 8566B spectrum analyzer. Refer the the HP 8566B spectrum analyzer manuals for further information and for examples.

A sweep into the desired trace should not be active if KS~ is to be used.

Attempting to use KS~ for a DA that does not correspond to an HP 8566B spectrum analyzer trace data address will result in an “Illegal operation” error. If enough memory does not exist to create a temporary sampling trace, a “Memory Overflow” error will occur.

## Query Response

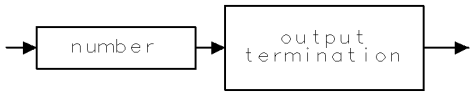


qgennum

# DEBUG

DEBUG MODE

Find faulty syntax in program.

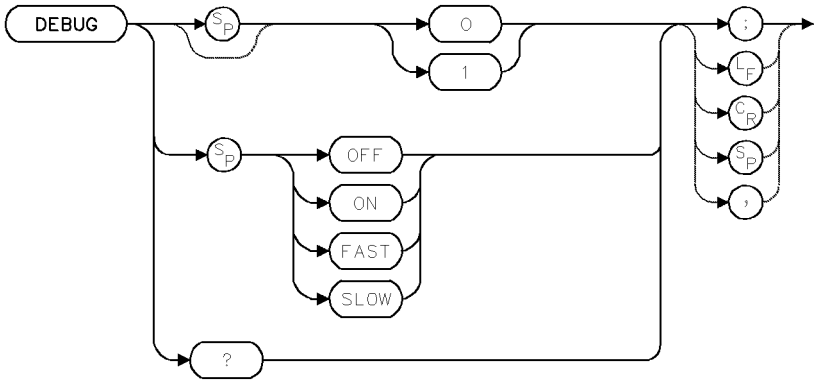


| Item | Description |
|---|---|
| Preset State | DEBUG OFF |

## Example

Activate debugging.

```
210 OUTPUT 718;"DEBUG SLOW;"    Activate the slow debug mode.
220 OUTPUT 718;"DEBUG OFF;"     Turn off debug mode.
```

The DEBUG command is a troubleshooting aid for locating faulty syntax in spectrum analyzer programs. DEBUG ON, DEBUG SLOW, and DEBUG FAST activate the debug mode, where spectrum analyzer commands are displayed on the **data line** below the graticule as the commands are executed. When a faulty spectrum analyzer command is encountered, subsequent analyzer commands are not executed. The faulty command is the last command shown at the right end of the data line. DEBUG also activates keys that step, pause, or continue program operation.

DEBUG FAST processes commands quickly.

DEBUG SLOW processes command slowly.

**DEBUG**

See “Debugging Programs” in the Programming Fundamentals chapter for more programming examples.

## Query Response

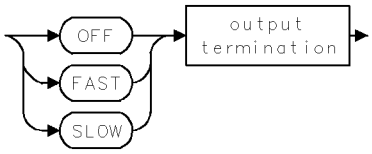

# DELETE

DELETE ITEM

Delete graphics **item** from memory.

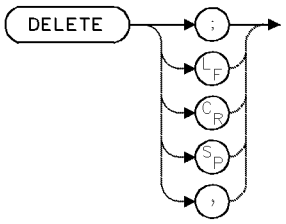


| Item | Description |
|---|---|
| Interdependent Commands | IT. Inactive after `IT 0` is executed. |

## Example

Use DELETE to delete a graphics item from the display and memory.

```
120 CLEAR 718                       Initialize analyzer.
130 OUTPUT 718;"IP;"
140 OUTPUT 718;"CLRDSP;"            Clear graphics.
150 OUTPUT 718;"TRDSP TRA,OFF;"     Turn off trace A.
160 OUTPUT 718;"IT 1;VW OFF;"
170 OUTPUT 718;"TEXT$An Item$;"     Define item 1 as text located at (150,600).
180 OUTPUT 718;"OR 150,600;"
190 OUTPUT 718;"VW ON;"             Display item 1.
200 OUTPUT 718;"IT 2;VW OFF;"       Define item 2 as a triangle at (500,500).
210 OUTPUT 718;"PA 0,0,50,50,";
220 OUTPUT 718;"50,0,0,0;"
230 OUTPUT 718;"OR 500,500;"
240 OUTPUT 718;"VW ON;"             Display item 2.
250 OUTPUT 718;"WAIT 2;"            Wait two seconds.
260 OUTPUT 718;"IT 1;DELETE;"       Delete item 1 from the display and memory.
```

The DELETE command blanks the active graphics **item** from the display and from its memory. This command does not apply to item 0 (zero). Items are stored in memory located in the display (such as HP 70004A color display, HP 70205A graphics display, or HP 70206A system graphics display) with the spectrum analyzer IT command. See IT. See also “Items” under “Creating Graphics” in the Programming Fundamentals chapter.

# DET

DETECTION MODE

Select signal-detection method: normal, positive, negative, or sample.

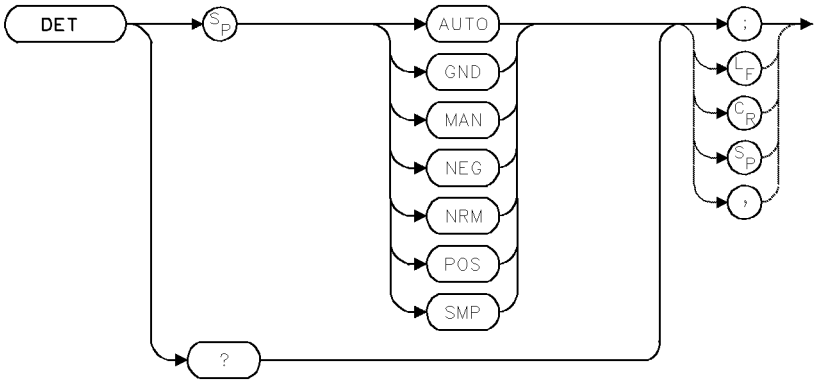


| Item | Description |
|---|---|
| Restrictions | DET GND is inoperative after ADC 2 when HP 70700A digitizer is configured as part of the spectrum analyzer. |
| Interdependent Commands | TRPST, MXMH, MINH, MKNOISE, VAVG |
| Preset State | DET AUTO |

## Example

Activate positive peak detection.

```
170 OUTPUT 718;"DET POS;"     Set detection mode to positive.
```

The DET command selects the kind of spectrum analyzer input detection.

DET NRM (normal detection) chooses between positive- and negative-peak values according to the Rosenfell algorithm, which tests to see if a response rises and falls in the sampling interval. The Rosenfell algorithm is a combination of positive- and negative-peak detection, where the minimum value detected in one interval is displayed alternately with the maximum value detected in the previous two intervals. Signals that occur within the interval are displayed, even if they occur within an interval that displays the minimum value.

DET POS (positive-peak detection) displays the maximum signal level detected during the sample interval.

DET NEG (internal negative-peak detection) displays the minimum signal level detected during the sample interval.

DET SMP (internal sample detection) displays the instantaneous signal level detected at the analog-to-digital converter output. Video averaging and noise-level marker (VAVG and MKNOISE) also activate sample detection.

DET GND is for servicing the spectrum analyzer and is inoperative when ADC 2 (or greater) has been executed when the HP 70700A digitizer is configured as part of the spectrum analyzer.

Detection has a manual and auto mode.

`DET AUTO` activates normal detection except when the following functions have been executed:

- Video averaging or the noise-level marker (VAVG, MKNOISE) activates sample detection.
- Maximum hold (MXMH) activates positive-peak detection.
- Minimum hold (MINH) activates negative-peak detection.

If more than one of the above conditions are met, the first condition has priority.

`DET MAN` restricts control of peak detection to the DET command only.

## Query Response

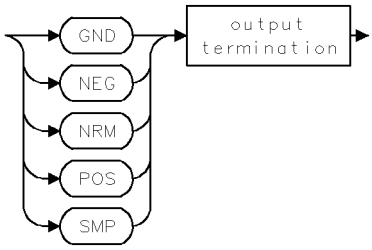

# DETSEL

DETECTOR SELECT

Select the hardware detector used for trace data (LOG or V).

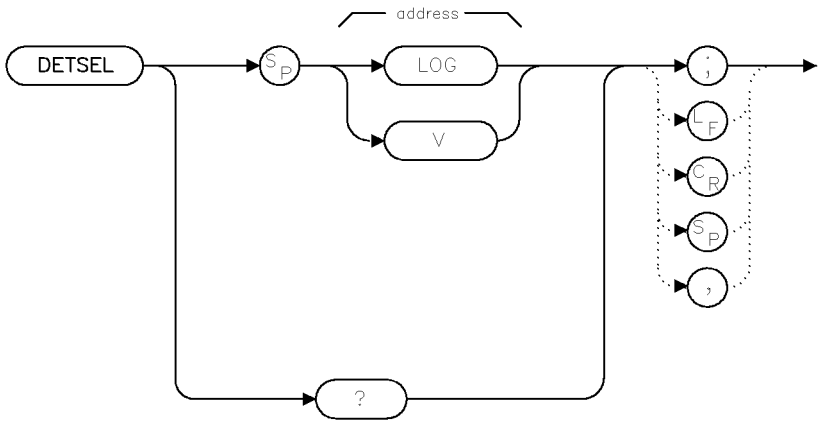


| Item | Description |
|---|---|
| Preset State | LOG |

## Example

```
DETSEL LOG;  Selects the LOG detector.[1]
DETSEL V;    Selects a voltage (linear) detector.[2]
DETSEL?      Returns the current detector status.
```

1 This is only available in the HP 70902A IF section/ HP 70903A IF section/Option HP 70911A WB IF section.

2 This is for the HP 70911A WB IF section only.

The DELSEL command works in concert with the CPLDET command to select the detector used for the display. Note that display units are not tied to the detector type. In other words the data can be digitized in volts, and then mathematically converted to dBm for display, or digitized in dBm and displayed in volts.

If CPLDET is on, this mode will change to be optimum for the current display units.

If a detector is selected that is not available, the `HARDWARE NOT PRESENT` error will occur. If the current path does not have the requested detector type available, the HARDWARE NOT PRESENT error will also occur.

## Query Response

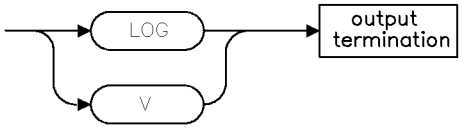


qures1

# DISPOSE

DISPOSE

Erase all or part of **internal memory**.

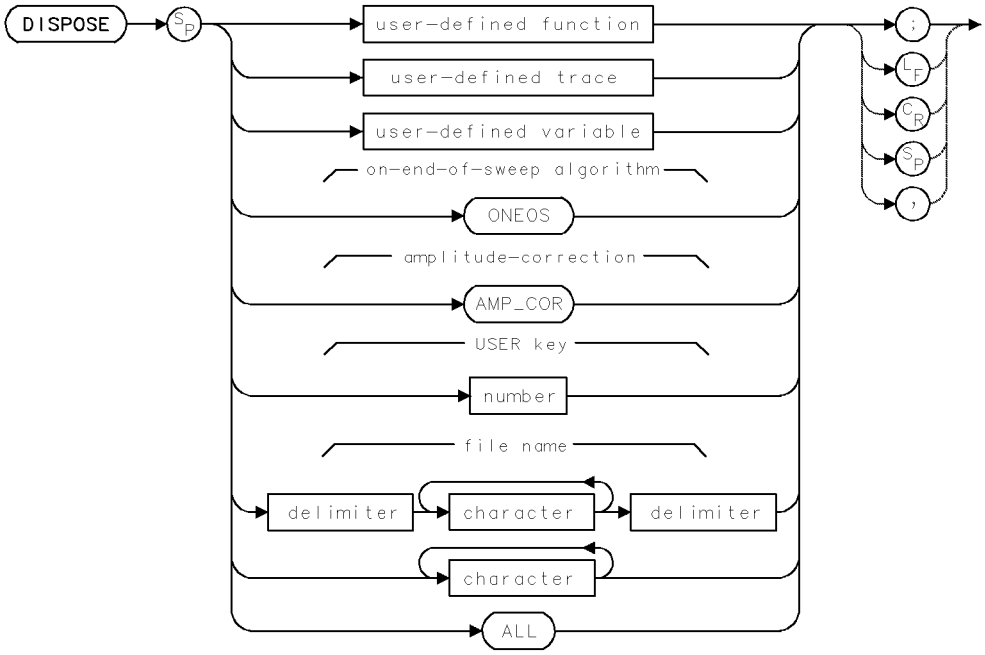


| Item | Description |
|---|---|
| Requirements | Delimiters required before and after *file name* when it contains a number or lower-case letters. When *file name* is upper-case alpha characters only, delimiters are optional. |
| Interdependent Commands | PROTECT Any command that stores or loads articles into internal memory: ACTDEF, AMPCOR, FUNCDEF, KEYDEF, LIMILINE, LIMISAV, LOAD, NSTATE, ONEOS, SAVES, SAVET, SAVEU, STOR, USERERR, USERKEY, USERMSG, VARDEF |

## Example

Use DISPOSE to erase articles from internal memory.

```
120 CLEAR 718                                    Initialize analyzer.
130 OUTPUT 718;"IP;"
140 OUTPUT 718;"VARDEF VA,0;"                    Define user-defined variable,
                                                 VA, equal to 0.
150 OUTPUT 718;"FUNCDEF NNN,@ @;"                Define null, user-defined func-
                                                 tion, called NNN. (There are
                                                 no commands between delim-
                                                 iters @ and @.)
160 OUTPUT 718;"KEYDEF,7,NNN,$C$;"               Define key 7, called C, which
                                                 has the null function.
170 OUTPUT 718;"PROTECT VA,OFF;PROTECT NNN,OFF;" Turn off internal-memory protection.
```

```
180 OUTPUT 718;"DISPOSE 7;"          Erase key from internal memory.
190 OUTPUT 718;"DISPOSE VA;"         Erase user-defined variable from
                                     internal memory.
200 OUTPUT 718;"DISPOSE NNN;"        Erase user-defined function from
                                     internal memory.
```

The DISPOSE command clears **internal memory**, which is reserved for operator use.

Executing `DISPOSE ALL` clears the following from internal memory. (See table below.)

**Table 2-7. Internal Memory Contents**

| Article | Storing Command |
|---|---|
| User-defined functions | ACTDEF, FUNCDEF, RCLD, LOAD |
| User-defined variables | VARDEF, RCLD, LOAD |
| On-end-of-sweep algorithm | ONEOS, RCLD, LOAD |
| User-defined key | KEYDEF |
| User-defined trace arrays | TRDEF, RCLD, LOAD |
| Amplitude correction factors | AMPCOR |
| Limit-line trace arrays | LIMILINE, FUNCDEF, RCLD, LOAD |
| (USER) keys files | STOR, SAVEU |
| Limit line files | STOR, LIMISAV |
| Trace files | STOR, SAVET |
| State register files | STOR, SAVES |
| Program Files | SAVED |

An article can be cleared from internal memory individually by specifying its name, except for user-defined keys which are specified by number.

`DISPOSE ALL` does not clear any articles from reserved memory, such as the predefined traces A, B, and C. `DISPOSE ALL` does not clear items (IT) or graphics windows (DWINDOW).

The PROTECT command protects articles in internal memory against erasure with the DISPOSE command. If any articles are protected, `DISPOSE ALL` erases only unprotected articles. When DISPOSE attempts to erase a single protected article, an error message is generated.

The following table summarizes commands that protect, erase, or allocate the contents of **internal memory**. For more information, see "Memory" in the Programming Fundamentals chapter.

**Table 2-8. Commands that Erase or Protect Internal Memory**

| Memory Components | Commands that Erase or Reset Memory | | Commands that Protect Memory | |
|---|---|---|---|---|
| | PURGE/DISPOSE/PERASE/ERASE | NSTATE | PROTECT | PSTATE |
| **user-defined variable** | X | | X | |
| **user-defined trace** | X | | X | |
| **user-defined function** | X | | X | |
| **active user-defined function** | X | | X | |
| **on-end-of-sweep-algorithm** | X | | X | |
| **trace-amplitude correction factors** | X | | X | |
| **limit-line trace arrays** | X | | X | |
| **trace-amplitude correction factors** | X | | X | |
| **state register file (instrument settings and title line,)** | X | X | X | X |
| **trace file** | X | | X | |
| **(USER) keys file** | X | | X | |
| **Limit line file** | X | | X | |

# DISPU

DISPOSE USER MENU

Dispose of a user menu.

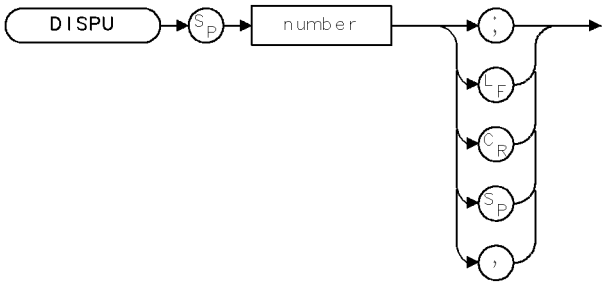


XDISP

| Item | Description |
|---|---|
| Range | integer, 0 - 9999, depending on memory |
| Interdependent Commands | SAVEU, PREFX |

The DISPU command is used to dispose USER menus that have been saved with the `SAVE USERKEY` softkey or the equivalent SAVEU command. The current PREFX is used.

# DIV

DIVIDE

Divide.

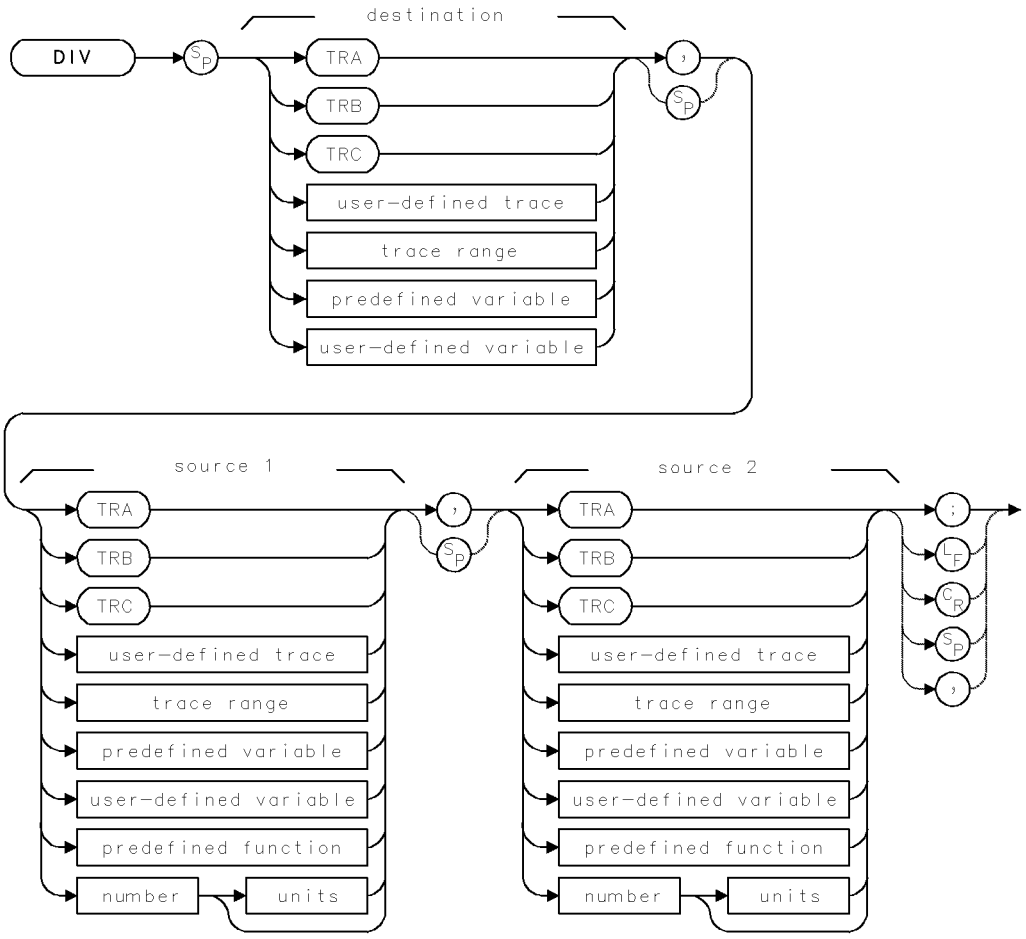

| Item | Description |
|---|---|
| Source or Destination Amplitude Range | 0 – 10,000 measurement units for linear trace data in *TRA*, *TRB*, *TRC*, *trace range*, or *user-defined trace*. −32,768 – +32,767 measurement units for logarithmic trace data in *TRA*, *TRB*, *TRC*, *trace range*, or *user-defined trace*. $\pm$ 1.8 $\times$ $10^{308}$ when using *number*, *predefined variable*, or *user-defined variable*. |
| Source-Length Range | 1 – 1024. Default is 800 when using *TRA*, *TRB*, *TRC*. When source lengths differ, the last element of the shorter source is repeated for the division process. When the sources are longer than the destination trace, they are truncated to fit. |
| Destination-Length Range | 1 – 1024 position units. |
| Requirements | Be sure data reflects one complete sweep when using *TRA*, *TRB*, *TRC*, or *trace range* for source. SNGLS and TS suggested. TRDEF required when using *user-defined trace*. VARDEF required when using *user-defined variable*. |

## Example

Divide the amplitude of trace A by two and store the new trace in trace B.

```
140 OUTPUT 718;"SNGLS;"           Activate single-sweep mode.
150 OUTPUT 718;"TS;"              Sweep trace A.
160 OUTPUT 718;"DIV TRB,TRA,2;"   Divide trace A by 2. Store results in trace B.
170 OUTPUT 718;"VIEW TRB;"        View trace B.
```

The DIV command divides source 1 by source 2, then sends the result to the destination:

source 1 / source 2 ▸ destination

If traces are used, be sure each contains a complete sweep of measurement information before executing DIV.

The sources and destination may be of different length. The length of traces can vary from 3 to 1024. Variables have a length of one. When sources differ in length, the last element of the shorter source is repeated for the division process. When the sources are longer than the destination, they are truncated to fit.

# DL

DISPLAY LINE

Control display and level of display line.

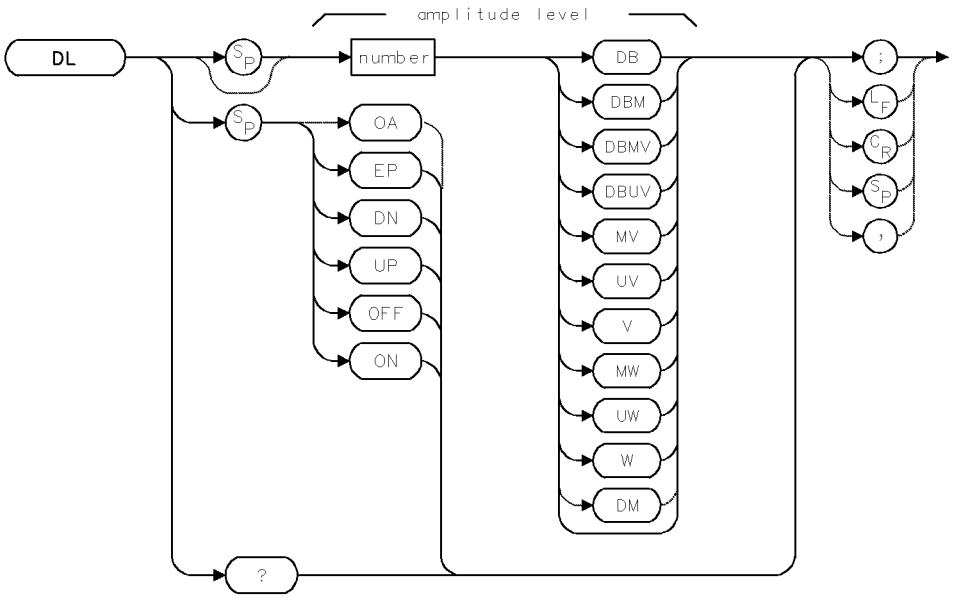


| Item | Description |
|---|---|
| Step Increment | 1 major vertical division |
| Interdependent Command | TRPST and any amplitude-related commands, such as ROFFSET, CNVLOSS, MEASURE, RL, LN, LG, INZ and math commands. |
| Preset State | `DL OFF; DL 0 dBm` |

## Example

Place display line at highest amplitude value of trace A.

```
140 OUTPUT 718;"FA 100MHZ;FB 1100MHZ;TS;"   Set measurement range and sweep.
150 OUTPUT 718;"MKPK HI;"                   Mark highest amplitude value.
160 OUTPUT 718;"DL ON;"                     Turn on the display line.
170 OUTPUT 718;"MOV DL,MKA;"                Move the marker value into DL (predefined variable).
```

The DL command positions a line on the display for visual and computational purposes.

## Query Response

# DONE

DONE

Return a “1” to the computer when commands have been executed.

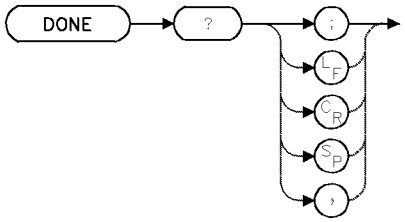


| Item | Description |
|---|---|
| Requirements | Precede with TS. |

## Example

Use DONE to delay the execution of spectrum analyzer commands until the entire measurement range is swept.

```
160 OUTPUT 718;"TS;DONE?;"
```
*Sweep the measurement range, then return a “1” when the sweep is completed.*

```
170 ENTER 718;A
```
*Assign “1” to computer variable.*

The DONE command returns a “1” to the computer when all of the commands encountered before the DONE command have executed.

For example, when DONE? follows TS, the user is assured the operation of the computer program is suspended until the sweep is completed. (Refer to “Program Timing” in the Programming Fundamentals chapter.)

## Query Response

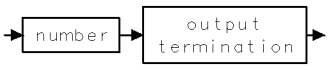

# DSPLY

DISPLAY VARIABLE

Display a number anywhere on the spectrum analyzer display.

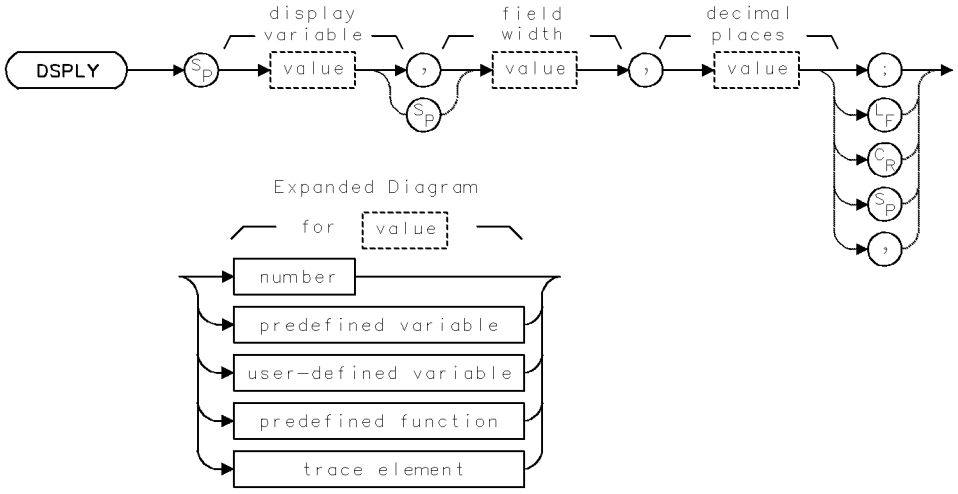


| Item | Description |
|---|---|
| Field-Width Range | 1 – 18 |
| Decimal-Place Range | For field widths greater than 3, range is from 0 to field width less three. For field widths equal to or less than 3, range is 0 (zero). |
| Requirements | VARDEF required when using *user-defined variable*. |
| Restrictions | Cannot be executed after `DWINDOW ON`. |
| Interdependent Commands | CLRDSP, PA, PR |

## Example

Display the value of an analyzer variable on the analyzer display.

```
130 OUTPUT 718;"CLRDSP;"
140 OUTPUT 718;"PU;PA 500,700;"
150 OUTPUT 718;"DSPLY CF,12,0;"
```

*Clear graphics. Reset origin to (0,0), and scale to 0 to 1000 for X and Y.*

*position pen at (500,700).*

*Display the center frequency on the analyzer display without decimal values, using a field width of 12. Notice that 11 numbers are displayed. The twelfth character in the data field is sign information.*

## DSPLY

The DSPLY command displays the value of a variable at the current position of the pen, determined by the plot-absolute (PA) or plot-relative (PR) commands or determined by the OR command during the reference-graphics mode.

*Field width* determines the number of characters displayed, including digits, sign, and decimal point.

*Decimal places* determines the number of digits to the right of the decimal point.

If the value does not fit in the specified parameters, the variable is displayed in exponential notation. See "Creating Graphics" in the Programming Fundamentals chapter.

# DSPMODE

DISPLAY MODE

Display catalog of **user memory** contents; HP-MSIB addresses of modules; module-level parameters; or system-level parameters, serial numbers, and revision numbers.

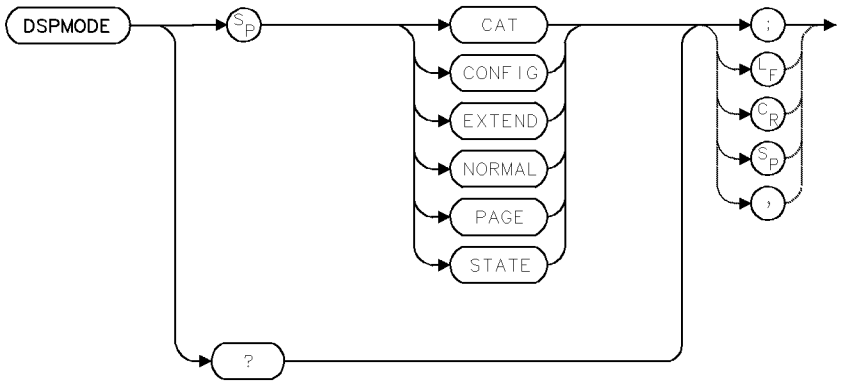


| Item | Description |
|---|---|
| Requirements | To view the catalog of the desired mass storage device, (HP-IB device, HP-MSIB device, or internal memory), execute MSI before executing `DSPMODE CAT`. Internal memory is the storage device when power is applied to the spectrum analyzer.) Execute `DSPMODE PAGE` after `DSPMODE CAT`, `DSPMODE CONFIG`, `DSPMODE EXTEND`, or `DSPMODE STATE` has been executed. |
| Interdependent Commands | MSI |
| Preset State | `DSPMODE NORMAL` |

## Example

Display on the analyzer display the current contents of internal memory. Also display the instrument settings under operator control and the model number, serial number, and firmware version (ROM) of the controlling module.

```
130 OUTPUT 718;"CLRDSP;"          Clear graphics from memory.
140 OUTPUT 718;"DSPMODE CAT;"     Display contents of currently selected user memory.
150 OUTPUT 718;"WAIT 4S;"         Wait 4 seconds.
160 OUTPUT 718;"DSPMODE STATE;"   Display the instrument settings and description
                                  of the controlling module.
170 OUTPUT 718;"WAIT 2S;"         Wait 2 seconds.
180 OUTPUT 718;"DSPMODE PAGE;"    View the next page of information.
```

The DSPMODE command lists descriptions of system or module configurations on the analyzer display:

`DSPMODE CAT` displays the contents of the currently selected **user memory**. Listed are any user-defined functions, variables, traces, files, and the name and byte size of each entry. The size of traces A, B, and C are also provided if **internal memory** is selected.

**DSPMODE**

`DSPMODE CONFIG` describes the placement of each module in the system by its HP-MSIB address (row and column number).

`DSPMODE EXTEND` displays module-level parameters for each module in the system.

`DSPMODE NORMAL` activates the normal analyzer display where the graticule and swept responses are shown.

`DSPMODE STATE` lists the current state of the system-level parameters under operator control, such as frequency ranges and bandwidth settings. It also lists the identification and serial numbers, and revision date of the system-controlling module, the local oscillator module.

`DSPMODE PAGE` displays the next "page" of information, if any. Execute it when previous executions of DSPMODE provide more than one page of information.

Use the DSPTEXT command to return the listings shown on the analyzer display to the computer.

## Query Response

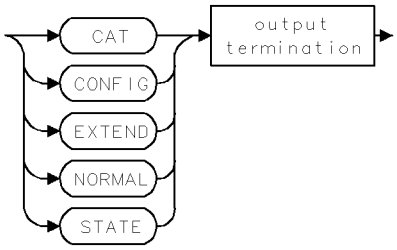

# DSPTEXT

RETURN DISPLAY-MODE TEXT

Return catalog of **user memory** contents; HP-MSIB addresses of modules; module-level parameters; or system-level parameters, serial numbers, or revision numbers.

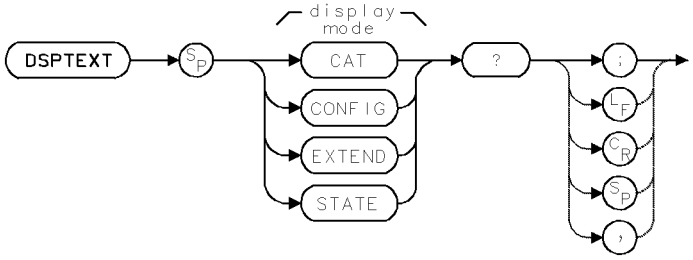


| Item | Description |
|---|---|
| Requirements | To return the catalog of the desired mass storage device, (HP-IB device, HP-MSIB device, or internal memory), execute MSI before executing `DSPTEXT CAT`. Internal memory is the storage device when power is applied to the spectrum analyzer.) |
| Restrictions | Name and filetype are restricted to a maximum number of 15 characters; otherwise, both fields are truncated. |
| Interdependent Commands | MSI, CATALOG |

## Example

Use DSPTEXT to return to the computer a listing of the articles stored in the currently selected user memory.

```
140 CLEAR 718                    Initialize analyzer.
150 OUTPUT 718;"IP;";
160 OUTPUT 718;"CLRDSP;";        Clear graphics from memory.
170 ALLOCATE Cat$[5000]          Create 5000-element computer array.
180 OUTPUT 718;"DSPTEXT CAT?;"   Return listing of contents of currently selected user
                                 memory.
190 ENTER 718 USING "-K";Cat$    Assign contents to computer array.
200 PRINT                        print contents on computer display.
210 FOR I=1 TO LEN(Cat$)         (This routine adds carriage returns.)
220 IF Cat$[I,I]=CHR$(10) THEN
230 PRINT ""
240 ELSE
250 PRINT Cat$[I,I];
260 END IF
270 NEXT I
280 DEALLOCATE Cat$
```

The DSPTEXT command returns system-level or module-level information to the computer. The information returned duplicates the information displayed on the analyzer display with the

DSPMODE command or the `catalog & MSI` key. Each line of data is returned as one record separated by a line feed.

`DSPTEXT CAT?` returns the contents of the currently selected **user memory**. Listed are any user-defined functions, variables, traces, or files. Also listed are the name and byte size of the trace registers for traces A, B, and C.

`DSPTEXT CONFIG?` returns the placement of each module in the system by its HP-MSIB address (row and column number).

`DSPTEXT EXTEND?` returns module-level parameters for each module in the system.

`DSPTEXT STATE?` returns the current state of the system-level parameters under operator control, such as frequency ranges and bandwidth settings. It also returns the identification and serial numbers, and firmware date of the system-controlling module, the local oscillator module.

See DSPMODE.

## Query Response

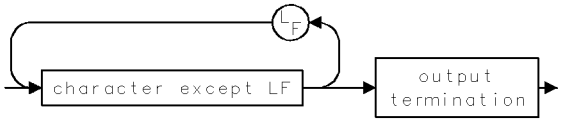

# DWINDOW

DEFINE GRAPHICS WINDOW

Define alternate scale for graphics.

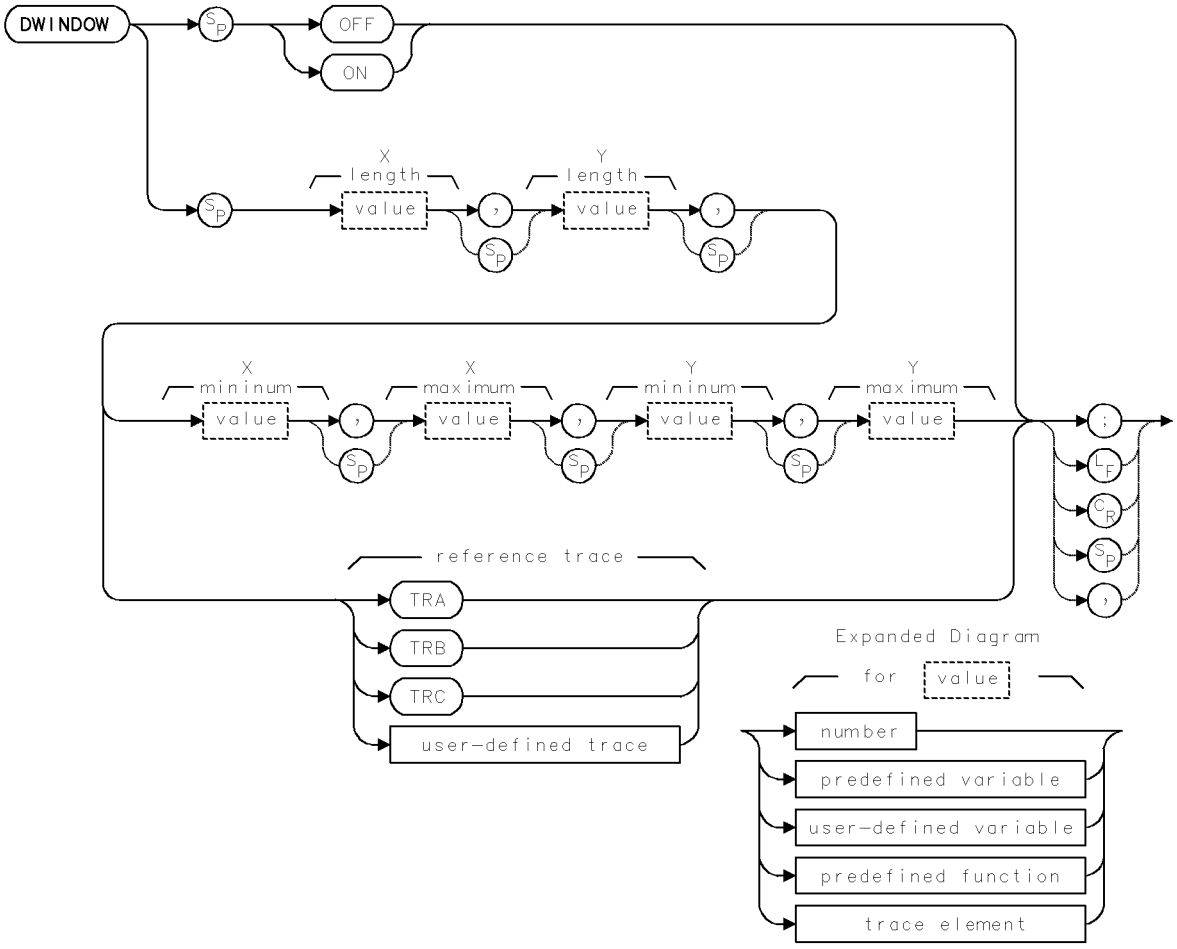


| Item | Description |
|---|---|
| X-Length Range | −32,768 – 32,767, in units set by SCALE command. |
| Y-Length Range | −32,768 – 32,767, in units set by SCALE command. |
| X-Minimum Range | −32,768 – 32,767 |
| X-Maximum Range | −32,768 – 32,767 |
| Y-Minimum Range | −32,768 – 32,767 |
| Y-Maximum Range | −32,768 – 32,767 |
| Requirements | TRDEF required when using *user-defined trace*. |
| Restrictions | `DSPLY, GRID` or `TEXT` cannot be executed after `DWINDOW ON`. |
| Interdependent Commands | SCALE, OR, TRCOND, SCALE, GRAPH, IT, PA, PR, PD, PU, MK |
| Preset State | `DWINDOW OFF` |

## Example

Draw Y = $X^2$ on the analyzer display.

```
180 CLEAR 718                          Initialize analyzer.
190 OUTPUT 718;"IP;"
200 OUTPUT 718;"CLRDSP;"               Clear graphics from memory.
210 OUTPUT 718;"TRDSP TRA,OFF;"        Turn off trace A.
220 OUTPUT 718;"OR 600,550;"           Set origin to (600,550) in current scale units.
                                       (CLRDSP sets units of X and Y axis from 0 to
                                       1000.)
230 OUTPUT 718;"DWINDOW 400,400,-10,10,0,100;"
```

*Define a graphics window that is square and has sides 400 units long, in units determined by CLRDSP above. The window itself contains its own scale. The minimum and maximum value for its X axis are −10 and 10. The minimum and maximum values for its Y axis are 0 and 100.*

```
240 OUTPUT 718;"PU;PA −10,0;"
```

*Outline the window.*

```
250 OUTPUT 718;"PD;PA −10,100,10,100,10,0,−10,0;"

260 OUTPUT 718;"VARDEF XAXIS,−10;"         Assign −10 to a user-defined variable.
270 OUTPUT 718;"VARDEF YAXIS,0;"           Assign 0 to a user-defined variable.
280 OUTPUT 718;"PU;PA −10,100;PD;";        place the pen at (−10,100) in window
                                           units.
290 OUTPUT 718;"REPEAT;";                  Begin repeat loop.
300 OUTPUT 718;"ADD XAXIS,XAXIS,1;";       Add 1 to XAXIS.
310 OUTPUT 718;"MPY YAXIS,XAXIS,XAXIS;";   Set YAXIS equal to (XAXIS²).
320 OUTPUT 718;"PA XAXIS,YAXIS;";          Draw square function point-by-point.
330 OUTPUT 718;"UNTIL XAXIS,EQ,10;"        End repeat loop when XAXIS equals 10.
340 OUTPUT 718;"PU;PA −2,80;"              place pen at (−2,80) in window units.
350 OUTPUT 718;"DWINDOW OFF;"              Turn off the window. Window param-
                                           eters are retained in memory. The fol-
                                           lowing TEXT command does not operate
                                           when the window is on.
360 OUTPUT 718;"TEXT$Y=X"                  Write text at current pen position.
370 OUTPUT 718;CHR$(130);"$;"
```

The DWINDOW command creates a new coordinate system that repositions, magnifies or reduces graphics on the analyzer display. This new coordinate system is called a graphics window.

DWINDOW defines the *size* and *scale* of the graphics window:

The size of the window is determined by *X Length* and *Y Length*, which are specified in the current scale units. (Scale units are 0 to 1000 for both X and Y unless specified otherwise with the SCALE command.)

The scale of the coordinate system within the window is determined by *X Minimum*, *X Maximum*, *Y Minimum*, and *Y Maximum*.

The *position* of the window on the analyzer display is specified with the OR command.

Use DWINDOW to display custom graphics created with the plotting commands (PA, PR, PD, PU, MK) or to display trace information with the GRAPH command. If custom graphics are displayed, *X Minimum*, *X Maximum*, *Y Minimum*, and *Y Maximum* scale the coordinate system of the window in increments.

DWINDOW cannot be used when displaying variables, grids, or text with the DSPLY, GRID, or TEXT commands.

See "Creating Graphics" in the Programming Fundamentals chapter.

# ENTER

ENTER VIA HP-IB

Receive data from HP-IB as a controller.

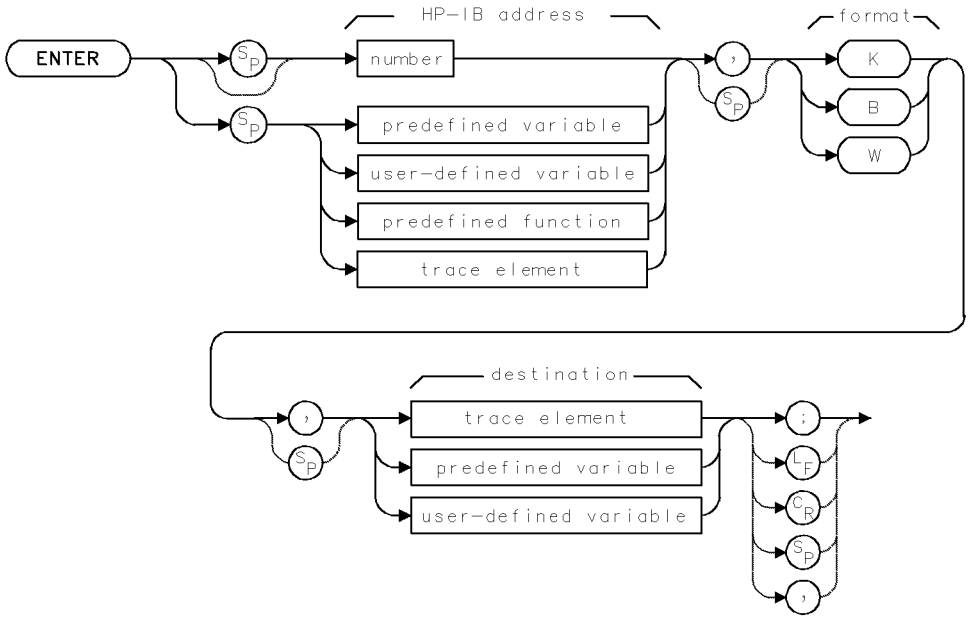


| Item | Description |
|---|---|
| HP-IB Address Range | 0 – 30 |
| Requirements | VARDEF when using *user-defined variable*. |
| Interdependent Commands | RELHPIB, VARDEF |

## Example

Use the analyzer to control an HP 3478 multimeter via HP-IB. Run the program, then press the user-defined key, VDM, to communicate with the multimeter.

```
150 REMOTE 7                          place all devices in remote status.
160 CLEAR 718                         Initialize analyzer.
170 OUTPUT 718;"IP;"
180 OUTPUT 718;"VARDEF NN,0;";        Assign 0 to user-defined variable, NN.
190 OUTPUT 718;"FUNCDEF VDM,^";       Begin definition of user-defined function,
                                      called VDM.
200 OUTPUT 718;"OUTPUT 23,K,$H5$;";   Send message, "H5" to multimeter.
210 OUTPUT 718;"ENTER 23,K,NN;";      Receive value in amperes from multimeter.
                                      Store value in NN.
220 OUTPUT 718;"CLRDSP;";             Clear graphics from memory.
230 OUTPUT 718;"PA 400,500;";         Set pen at (400,500).
240 OUTPUT 718;"MPY NN,NN,1000;";     Convert returned value to milliamperes.
250 OUTPUT 718;"DSPLY NN,7,4;";       Display value on analyzer display.
260 OUTPUT 718;"RELHPIB;";            Release control of HP-IB.
```

```
270 OUTPUT 718;"^;"                    End definition of user-defined function.
280 OUTPUT 718;"KEYDEF 7,VDM,$VDM$;"   Assign function to user-defined key, called
                                       VDM.
290 SEND 7;UNL UNT DATA                Clear HP-IB of all talkers and listeners.
300 LOCAL 718                          place analyzer in local control. Press (USER),
                                       then press the user-defined key, VDM, to
                                       communicate with the multimeter.
```

The ENTER command establishes the analyzer as a controller on HP-IB. Use ENTER to request data from an HP-IB device.

*Address field* specifies the HP-IB address of the device.

*Format field* formats the returned data. K returns real, free-field numbers (ASCII decimal). B (byte) returns a single 8-bit byte. W (word) returns two 8-bit bytes.

Since HP-IB allows only one controller on HP-IB, the execution of ENTER must be either synchronized with computer operation or incorporated into user-defined functions that are executed with keys. (See "Executing User-Defined Functions" under "Storing New Functions in the Spectrum Analyzer" in the Programming Fundamentals chapter.)

Execute RELHPIB to discontinue analyzer control of HP-IB.

# ERASE

ERASE MEMORY

Erase *all* memory, including **internal memory** and **reserved memory**, serial numbers, correction factors, and all spectrum analyzer settings.

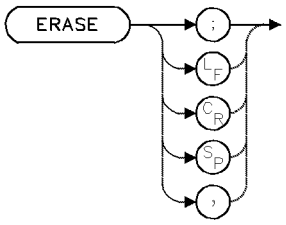


| Item | Description |
|---|---|
| Interdependent Commands | All commands. |

## Example

Erase all memory in the analyzer to destroy all previous instrument history.

```
10 OUTPUT 718;"ERASE;"    Erase all memory.
```

The ERASE command erases *all* memory including any items protected by the PSTATE or PROTECT command. Erased are contents of **internal memory**, which contains user-defined variables, traces, functions, keys, on-end-of-sweep algorithms, and files. Also erased is **reserved memory**, including serial-number information, **correction factors**, offsets, trace data, the limit-line table, all analyzer settings, and the input buffer where unexecuted commands (including any immediately following ERASE) have been stored. ERASE also sets the predefined variable, NSTATE, equal to 2.

**Note** ERASE destroys any stored conditions that may explain faulty operation and aid in troubleshooting.

Use ERASE for security applications to destroy all previous instrument history. After executing ERASE, (1) cycle power, or (2) press the (INSTR) key; or (3) press (DISPLAY), NEXT INSTR. Apply correction factors using the CAL command to prepare the spectrum analyzer for more measurements.

**Note** The ERASE command does not affect memory external to the spectrum analyzer, such as memory in the display, memory card, or HP-IB device.

# ERR

ERROR

Return codes of reported errors.

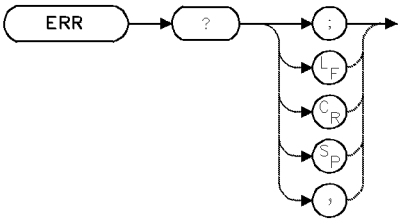


| Item | Description |
|---|---|
| Interdependent Commands | IP clears the error register. |

## Example

Use the ERR command to report analyzer errors to the computer.

```
20 CLEAR 718                          Initialize analyzer.
30 OUTPUT 718;"IP;";
40 ALLOCATE Error_numbers$[50]        Create 50-element array in computer for the stor-
                                      age of any returned analyzer errors.
50 OUTPUT 718;"SAVES 1;VIEW;"         Send two faulty commands to analyzer. Execute
                                      SAVES using out-of-limit parameter. Use the VIEW
                                      command with incorrect syntax.
60 OUTPUT 718;"ERR?;"                 Return analyzer codes to the computer.
70 ENTER 718;Error_numbers$           Store error codes in computer array.
```

The ERR command returns numeric codes that describe the nature of errors, if any have occurred.

Error codes are stored in the error register as they occur. ERR returns codes as long as they are in the register. If none are present, ERR returns “0” (zero). Instrument preset (IP) clears the error register.

## Query Response

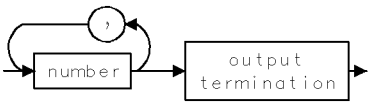

# EXP

EXPONENT

Divide by N, retain quotient, then store $10^{\text{quotient}}$.

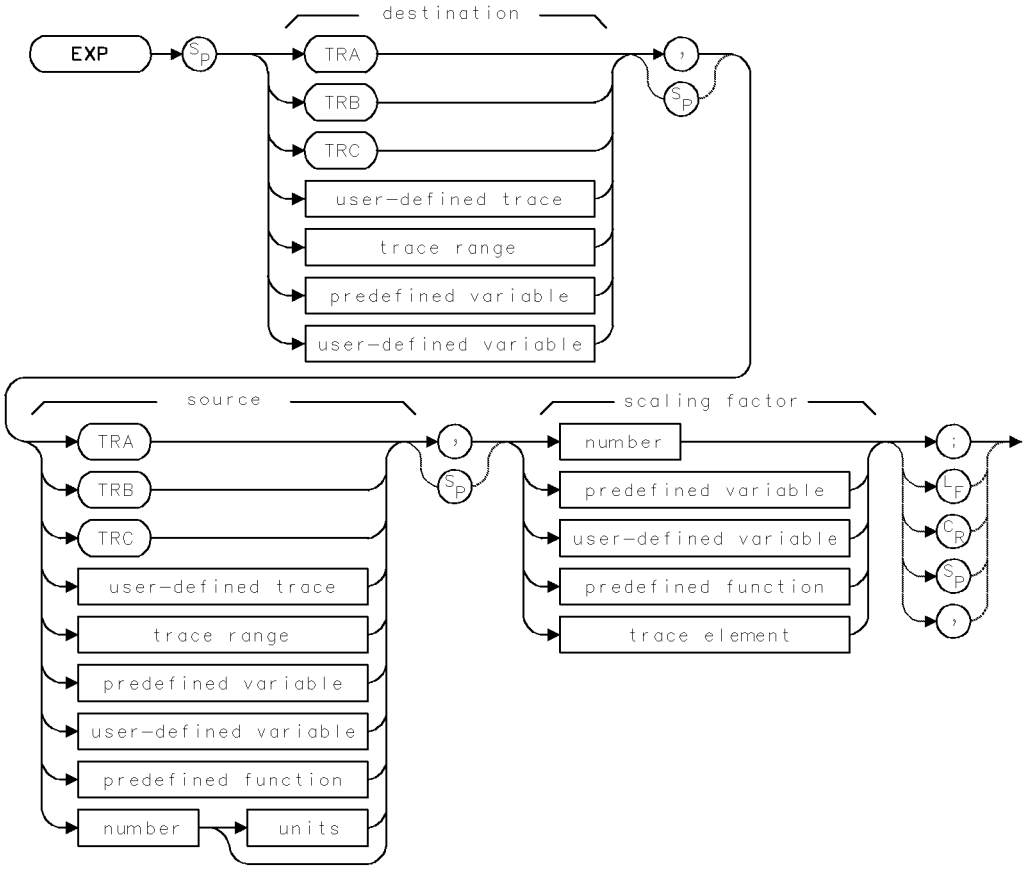


| Item | Description |
|---|---|
| Source or Destination Amplitude Range | 0 – 10,000 measurement units for linear trace data in *TRA*, *TRB*, *TRC*, *trace range*, or *user-defined trace*. –32,768 – +32,767 measurement units for logarithmic trace data in *TRA*, *TRB*, *TRC*, *trace range*, or *user-defined trace*. $\pm$ 1.8 $\times$ $10^{308}$ when using *number*, *predefined variable*, or *user-defined variable*. |
| Source-Length Range | 1 – 1024 position units. Default is 800 position units when using *TRA*, *TRB*, *TRC*. Truncated if longer than destination length. If shorter than destination length, last element is extended for operation. |
| Destination-Length Range | 1 – 1024 position units. |
| Requirements | Be sure data reflects one complete sweep when using *TRA*, *TRB*, *TRC*, or *trace range* for source. SNGLS and TS suggested. TRDEF required when using *user-defined trace*. VARDEF required when using *user-defined variable*. |

## Example

Use the EXP command to convert the marker amplitude to power terms.

```
10 CLEAR 718                          Initialize analyzer.
20 OUTPUT 718;"IP;"
30 OUTPUT 718;"SNGLS;"                Activate single-sweep mode.
40 OUTPUT 718;"VARDEF P_MW,0;"        Define user-defined variable equal to 0.
50 OUTPUT 718;"TS;MKPK HI;"           Sweep trace A. Mark highest signal on display.
60 OUTPUT 718;"EXP P_MW,MKA,10;"      Divide the marker amplitude by 10 and store
                                      results in P_MW.
70 OUTPUT 718;"P_MW?;";               Return value to computer.
80 ENTER 718;N                        Assign value to computer variable.
```

The EXP command first divides the source by the scaling factor, then uses the quotient as an exponent of 10:

$$10^{\text{source/scaling factor}} \blacktriangleright \text{destination}$$

# EXTIF

EXTERNAL IF

Route 321.4 MHz IF to an external device.

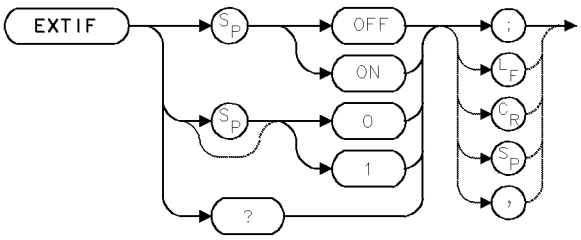


| Item | Description |
|---|---|
| Requirements | Precede EXTIF with the IP command. Follow EXTIF with the TS command. Requires HP 70908 RF Section in signal path. |
| Interdependent Commands | INPUT, PINPUT |
| Preset State | `EXTIF OFF` |

## Example

Send the IF signal to an external analog-to-digital converter (ADC), such as a digitizer.

```
20 OUTPUT 718;"IP;EXTIF;TS;"
```

The EXTIF command switches the IF signal path. During normal operation, the 321.4 MHz IF signal is routed to the next frequency converter and to the IF filters in the analyzer.

`EXTIF ON` activates the 321.4 MHz output port on the rear panel of the HP 70908A RF section. Execute `EXTIF ON` to bypass the analyzer circuitry and route the 321.4 MHz IF signal to an external device. `EXTIF ON` functions only when the input port of the HP 70908 module is active. Otherwise, an error condition occurs. (See INPUT and PINPUT.)

`EXTIF OFF` switches the port off and routes the 321.4 MHz IF signal through the analyzer.

## Query Response

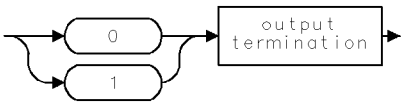

# EXTVID

EXTERNAL VIDEO

Control the external video switch (if present).

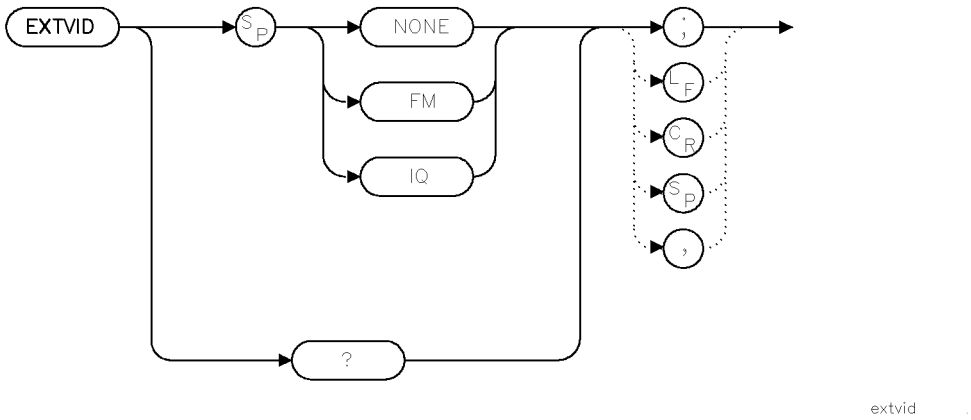


| Item | Description |
|---|---|
| Preset State | NONE |

## Example

```
EXTVID NONE;  Disable external video output.
EXTVID FM;    Select the FM external video path.
EXTVID IQ;    Select the IQ external video path.
EXTVID?       The response will be one of NONE, FM, or IQ.
```

If an external video switch is available, it can be set to one of its supported values. Not all external video switches support all values.

The external video switch menu appears on the 3rd page of the State menus. The menu entry is provided only if a choice between FM and IQ is available.

Depending upon the nature of the external video switch, the video signal may or may not be passed on to the normal instrument digitization sections. The user is responsible for exercising the necessary caution when this switch is used.

The NONE setting may not actually disable external video output in all modules.

"Hardware not present" will be reported if an unsupported switch position is requested.

Not all external video switches support all values. The only module currently supporting a value other than NONE is the HP 70911A WB IF section. These values are only available when the HP 70911A WB IF section is the active IF. The following are the supported values:

**Supported Values**

| Values | What is Supported |
|---|---|
| IQ | Option 005 FM discriminator |
| FM | Option 006 log detector |
| FM, IQ | Option 005 FM discriminator and Option 006 log detector |
| NONE[1] | Neither Option 005 FM discriminator or Option 006 log detector |

1 If either Option 005 or Option 006 is present, the NONE setting does not disable the external video output.

The menu entry currently is optimized to work with the HP 70911A WB IF section and its options. This menu entry may not provide sufficient control for other modules with external FM and/or IQ. (However, there are currently no other such modules known.)

## Query Response

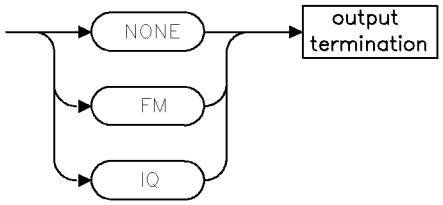


qures2

# FA

START FREQUENCY

Set start frequency of measurement range.

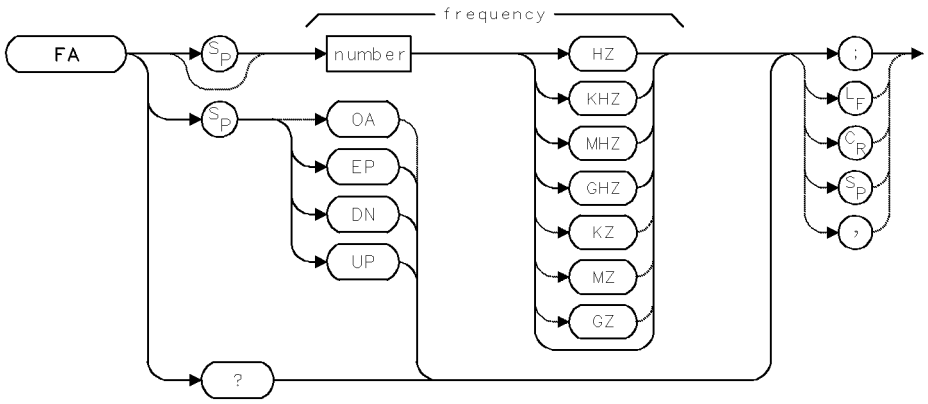


| Item | Description |
|---|---|
| Start-Frequency Range | ± 1000 GHz (or hardware limit) |
| Step Increment | Span/10 |
| Requirements | Update trace data after executing FA. |
| Interdependent Commands | Commands that affect frequency, such as CF, FB, FS, LOSTART, LOSTOP, HNLOCK, SP, FOFFSET, FULBAND |
| Preset State | Minimum value allowed by system configuration. |

## Example

Change the start frequency.

```
110 OUTPUT 718;"FA 500MHZ;"     Set start frequency to 500 MHz.
120 OUTPUT 718;"FA UP;"         Increase start frequency by 10% of the span.
```

The FA command specifies the start frequency of the measurement range. Start, span, and center frequency are related as follows:

$$\text{start frequency} = \text{center frequency} - \text{span} \div 2$$

The start- and stop-frequency settings are independent, except when the stop frequency is set lower than the start. In this case, the start frequency is set equal to the new stop frequency.

## Query Response

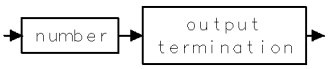

# FALIMIT

LIMIT START FREQUENCY

Limit the start frequency to avoid the LO feedthrough.

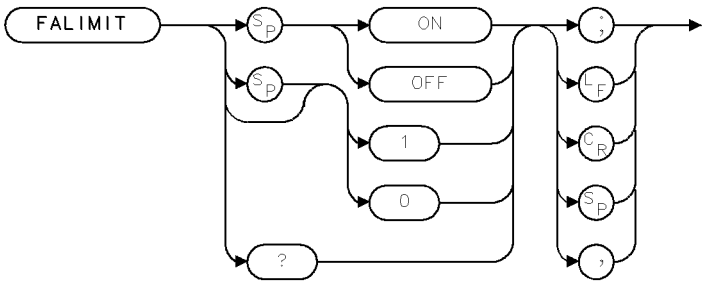


| Item | Description |
|---|---|
| Preset State | OFF |
| Interdependent Commands | BLANKFT |

## Example

```
OUTPUT 718;"FALIMIT ON;"
```

The FALIMIT command is intended for making relative power measurements of signals near zero frequency (for example, laser line-width measurements). (Also see MKRELPWR.)

FALIMIT disables the BLANKFT function and sets the start frequency to either a value eight times the resolution bandwidth or 100 kHz, whichever is greater. The purpose of this function is to prevent display of the local oscillator feedthrough signal when making measurements near zero frequency.

When FALIMIT is activated, the resolution bandwidth function automatically becomes the active parameter and the resolution bandwidth function is uncoupled from the frequency span function. An asterisk appears next to the “RB” resolution bandwidth annotation indicating that the functions are uncoupled.

Manually setting start frequency, center frequency, or frequency span overrides the limit-start-frequency function until the function is reinvoked. If the resolution bandwidth is changed, FALIMIT must be reinvoked to change the start frequency to a new limit.

To recouple the resolution bandwidth and span functions, set the resolution bandwidth function to automatic.

See the BLANKFT command for additional information on blanking the local oscillator-feedthrough signal.

**Note** Turning ON the FALIMIT command automatically turns off the BLANKFT command.

## Query Response

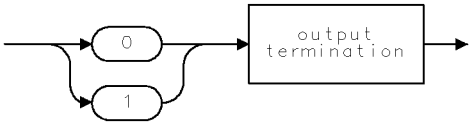


QG01

# FB

STOP FREQUENCY

Set stop frequency of measurement range.

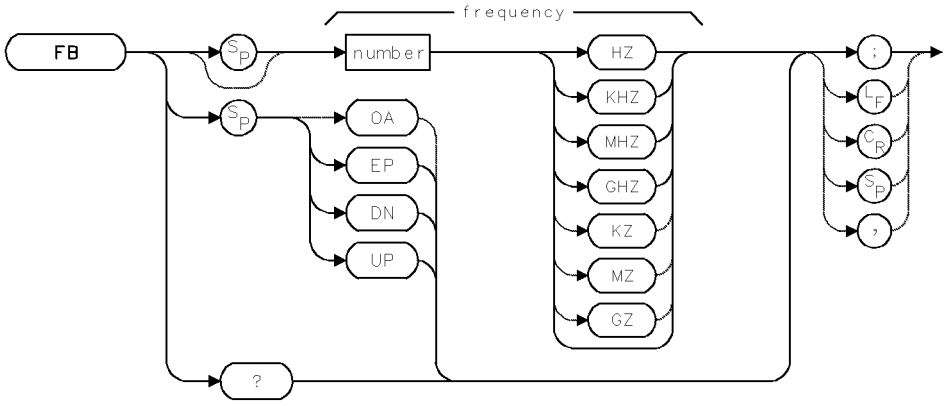


| Item | Description |
|---|---|
| Stop-Frequency Range | ± 1000 GHz (or hardware limit) |
| Step Increment | Span/10 |
| Requirements | Update trace data after executing FB. |
| Interdependent Commands | Commands affecting frequency, such as CF, FA, FS, LOSTART, LOSTOP, HNLOCK, SP, FOFFSET, FULBAND |
| Preset State | Maximum value allowed by system configuration. |

## Example

Set end of measurement range.

```
10 OUTPUT 718;"FB 400MHZ;"
```

The FB command specifies the stop frequency of the measurement range.

The stop, span, and center frequency are related as follows:

stop frequency = center frequency + span ÷ 2

The start- and stop-frequency settings are independent, except when the start frequency is set higher than the stop frequency. In this case, the stop frequency is set equal to the new start frequency.

## Query Response

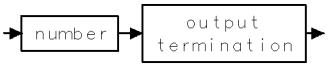

# FETCH

FETCH

Return trace data before the end of the sweep.

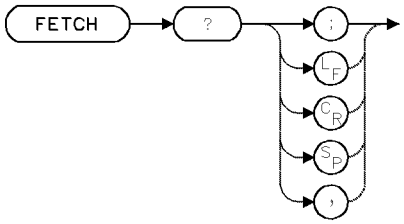


The FETCH command returns the contents of trace data to the computer. Data is returned as binary numbers, in words or bytes, as indicated by the MDS command. Data is returned as the spectrum analyzer sweeps, unlike the TRA, TRB, and TRC commands, which return data after the sweep is completed.

## Query Response

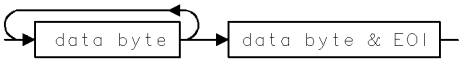

# FFT

FAST FOURIER TRANSFORM

Execute fast Fourier transform.

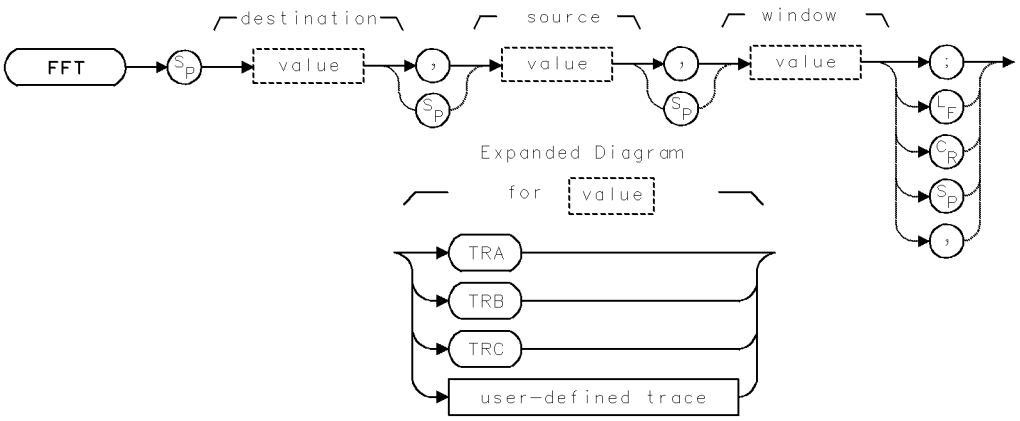


| Item | Description |
|---|---|
| Window-Length Range | Equals source length. |
| Source-Length Range | 1 – 1024. Default for TRA, TRB, TRC is 800. |
| Destination-Length Range | Equals source length. |
| Requirements | Be sure trace data reflects one complete sweep measured with a 0-Hz span. SNGLS and TS suggested. TWNDOW (Hanning, Hamming, uniform, flat-top) required when using *TRA*, *TRB*, or *TRC*. TRDEF required when using *user-defined trace*. |

## Example

Perform a Fourier-series transform on trace data.

(Connect calibrator signal to analyzer input.)

```
120 CLEAR 718                          Initialize analyzer.
130 OUTPUT 718;"IP;";
140 OUTPUT 718;"CLRDSP;";
150 OUTPUT 718;"CF 300MHZ;"            Set center frequency.
160 OUTPUT 718;"SP 0;ST 50MS;"         Set span to zero. Set sweep time.
170 OUTPUT 718;"TWNDOW TRC,FLATTOP;"   Place the window algorithm, FLATTOP, into
                                       trace C.
180 OUTPUT 718;"CLRW TRB;"             Clear-write trace B.
190 OUTPUT 718;"BLANK TRA;"            Blank trace A.
200 OUTPUT 718;"SNGLS;TS;"             Activate single-sweep mode and sweep trace
                                       B.
210 OUTPUT 718;"FFT TRA,TRB,TRC;"      Weight trace B with trace C data, then per-
                                       form Fourier transform. Store results in
                                       trace A.
220 OUTPUT 718;"BLANK TRB;"            Blank trace B.
230 OUTPUT 718;"VIEW TRA;"             Store and view trace A.
```

```
240 OUTPUT 718;"MKN;"          place a marker at the center of trace A. Notice
                               that the marker readout is in Hz.
250 OUTPUT 718;"HD;"           Blank active function readout.
```

## The FFT Algorithm

The FFT command performs a discrete Fourier-series transform on the source-trace array, then stores the logs of the magnitudes of the results in the destination array as follows:

1. The source trace is lengthened with zero-amplitude elements if it is shorter than the destination trace.
2. The amplitude of the source trace is converted to volts, if necessary.
3. The amplitude of the source trace is weighted according to the window algorithm.
4. The Fourier transform is performed.

Only magnitude components are stored. No phase or sign information is preserved in the results. Because of aliasing, the FFT command computes only the values of the even points of the destination trace. The odd values are obtained by interpolation. The source trace is returned unchanged.

Four predefined window algorithms are available with the TWNDOW command. In addition, you can create your own with the TRA, TRB, or TRC command. For maximum precision, the peak values of user-created windows should approach 32,767. The window trace may contain negative values (to −32,768) but they do not increase weighting resolution.

The values in the window trace are treated as fractional numbers. The average window value is computed and used to correct (normalize) the results in absolute units.

## What to Remember When You Execute FFT

- Use TWNDOW to select a weighting function (trace window) from one of the four available algorithms, or create your own with the TRA, TRB, and TRC commands.
- The lengths of the source and window traces must be equal and greater than four position units.
- Transform traces that have been measured during zero span mode.

## Trace Windows

The FFT algorithm assumes the source trace array is one period of an infinitely long string of concatenated, duplicate arrays. Thus, the beginning and end elements of the source trace array must gradually diminish to zero amplitude. If the end points of the original trace array are of different magnitude, the resulting array series could contain discontinuities that introduce high frequency components into the Fourier transform. The TWNDOW command offers four weighting algorithms that gradually reduce the amplitude at the ends of the source-trace array to zero.

The TWNDOW command formats trace arrays with one of the four algorithms: HANNING, HAMMING, UNIFORM, and FLATTOP. Each simulates a series of equally spaced filters. (Refer to Figure 2-3.) The detected, spectral line traces the top of the passband while moving from N $\Delta$ f to (N+1) $\Delta$ f.

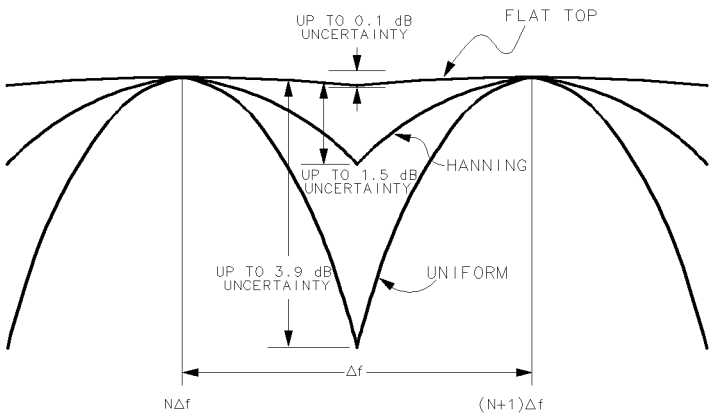


**Figure 2-3. Hanning, Flat Top, and Uniform Trace Windows (Hamming not shown)**

The amplitude and frequency uncertainty of the Fourier-transformed display depends on the choice of trace windows, and the analyzer sweep time. Amplitude uncertainty is maximum when the spectral component falls midway between the filter shapes. (See preceding figure.) Passbands that are flatter in shape, like the FLATTOP filter, contribute less amplitude uncertainty, but frequency resolution and sensitivity are compromised.

The UNIFORM window algorithm has the least frequency uncertainty and greatest amplitude uncertainty. Its worst case accuracy uncertainty is −3.9 dB and its 3 dB resolution bandwidth is 60% of the HANNING bandwidth. The UNIFORM window does not contain time-domain weighting and leaves the data alone. Use it for transforming noise signals or transients that decay within one sweep time period. The UNIFORM window yields the best frequency resolution, but also produces the highest side lobes for periodic signals.

The FLATTOP window has the greatest frequency uncertainty of the windows, but it has outstanding side lobe suppression and amplitude flatness. Use FLATTOP to transform periodic signals.

The HANNING window is a traditional passband window found in most real-time analyzers. The HANNING window offers a compromise between the FLATTOP and UNIFORM windows. The HANNING window amplitude uncertainty is −1.5 dB and its 3 dB bandwidth is 40% of the FLATTOP bandwidth. Use the HANNING window when transforming periodic or random data.

The HAMMING window has a bandwidth between the HANNING and FLATTOP windows, with more uniform side-lobe suppression than the HANNING window, but less suppression than either HANNING or FLATTOP for signals farther out of the passband.

## Interpreting Displayed Results

The FFT results are displayed on the spectrum analyzer in a logarithmic scale. The frequency at the left graticule line is 0 Hz. The maximum frequency ($F_{max}$) at the right graticule line equals the inverse of the sample rate, divided by two. Thus, a 20-millisecond sweep time yields a display spanning 20 kHz:

$$F_{max} = 1/(\text{sample rate}) \div 2$$
$$F_{max} = 1/[(\text{sweep time}) \div N] \div 2$$
$$F_{max} = 1/[20\ \text{ms} \div 800] \div 2$$
$$F_{max} = 20\ \text{kHz}$$

Where

N equals number of elements in trace array containing amplitude information. 800 is assumed.

Fourier transforms of the predefined weighting algorithms are shown on the following graphs. Use these graphs to estimate resolution and amplitude uncertainty of a Fourier-transform display. Each horizontal division of the graphs equals 1/(sweep time) or $F_{max} \div 400$, which can be calculated from the previous equations.

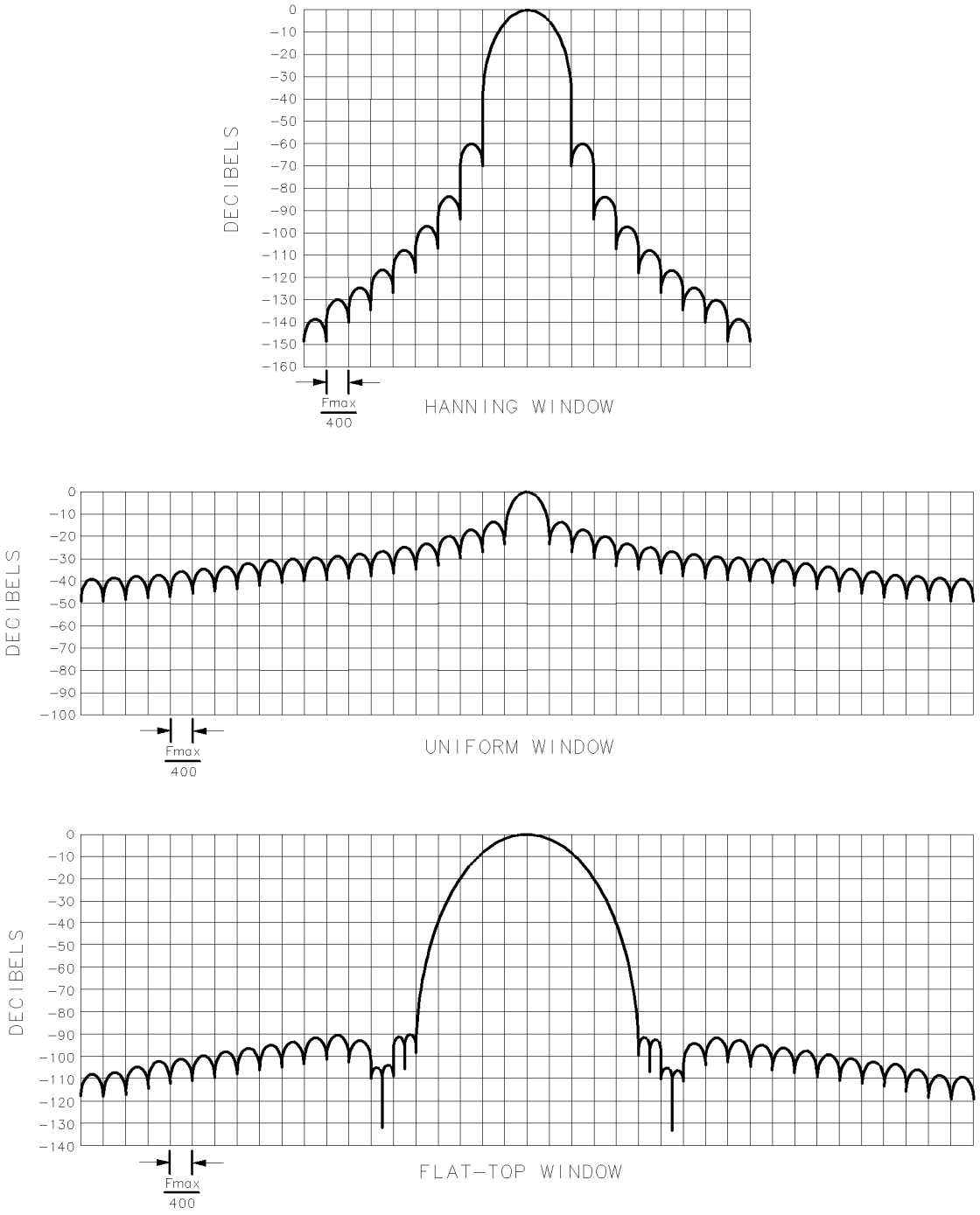


**Figure 2-4. Fourier Transforms of Hanning, Flat Top, and Uniform Trace Windows**

# FFTKNL

FAST FOURIER TRANSFORM KERNAL

Perform a 16-bit discrete Fourier transform.

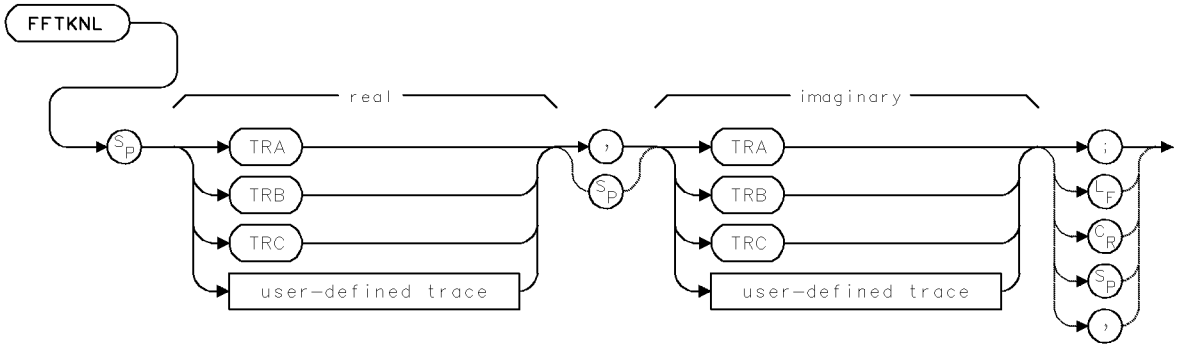


The FFTKNL performs a discrete Fourier transform on the specified traces, overlaying them with the results. Both traces must be the same length and the length must be a power of two. The two traces represent the real and imaginary components of one complex-value trace. FFTKNL does no other normalizing, scaling, clipping, or magnitude determination.

If the results of FFTKNL are to be multiplied by the length of the traces, use the IFTKNL command instead.

# FLIMIT

FREQUENCY LIMIT

Measure frequencies above 22 GHz.

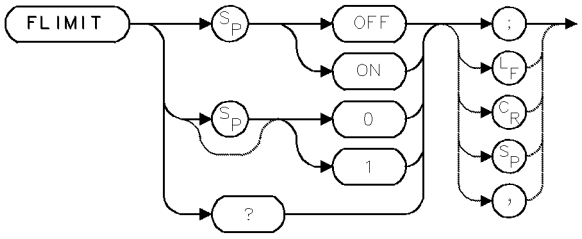


| Item | Description |
|---|---|
| Requirements | Requires HP 70908 RF Section. |
| Interdependent Commands | Commands affecting frequency, such as CF, FA, FB, FS, LOSTART, LOSTOP, HNLOCK, SP, FULBAND |
| Preset State | `FLIMIT ON` |

## Example

Limit measurements to frequencies less than or equal to 22 GHz.

```
10 OUTPUT 718;"FLIMIT ON;"
```

The FLIMIT command enables measurements above 22 GHz (beyond the specified range) with spectrum analyzers containing an HP 70908A RF section. `FLIMIT ON` limits measurement to frequencies less than or equal to 22 GHz. Use `FLIMIT OFF` to measure beyond 22 GHz with the HP 70908A RF section.

## Query Response

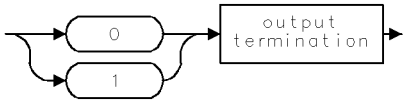

# FOFFSET

FREQUENCY OFFSET

Offset frequency scale.

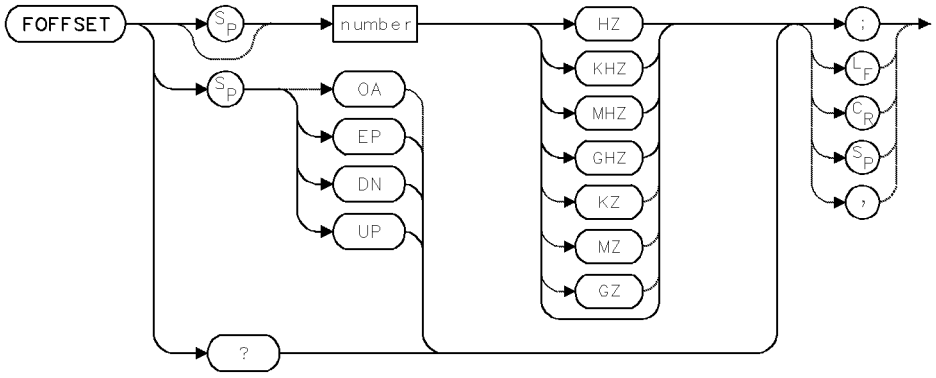


| Item | Description |
|---|---|
| Offset range | Actual range limited by hardware. Firmware range is ± 1000 GHz |
| Step Increment | For spans greater than 0, the step increment is span/10. For zero span, the step increment is the resolution bandwidth. |
| Interdependent Commands | Commands affecting frequency, such as CF, FA, FB, FS, LOSTART, LOSTOP, HNLOCK, SP, FULBAND |
| Preset State | `FOFFSET 0` |

## Example

Offset the value of the frequency readout.

```
10 OUTPUT 718;"FOFFSET 100MHZ;"
```

The FOFFSET command offsets the frequency scale for all absolute frequencyrequency readouts, inputs, and outputs. Relative values, like span readouts, inputs, and outputs. Relative values, like span and delta marker, are not offset.

Whenever the offset is active, “FOFFSET” appears below the graticule.

Execute `FOFFSET 0` or `IP` to turn off the offset.

## Query Response

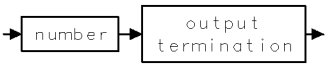

# FORMAT

FORMAT

Erase and format the currently selected memory device.

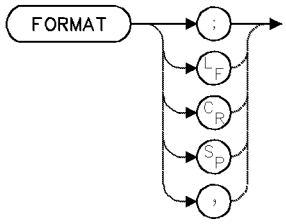


| Item | Description |
|---|---|
| Interdependent Commands | MSI, PROTECT, PSTATE |

The FORMAT command formats and erases the currently selected memory device. Internal memory is selected automatically when power is applied to the spectrum analyzer. To select another memory device, execute MSI.

When internal memory is selected, FORMAT erases all unprotected files from internal memory. (See PROTECT and PSTATE.)

When a memory card is selected, FORMAT erases all entries on the memory card. Use format to initialize new memory cards. Memory cards are formatted with the logical interchange format (LIF).

When a disk drive is selected, FORMAT erases all entries on a floppy disk and initializes it.

All new memory cards need to be formatted.

# FREQU

FREQUENCY UNITS

Convert **position units** to Hertz.

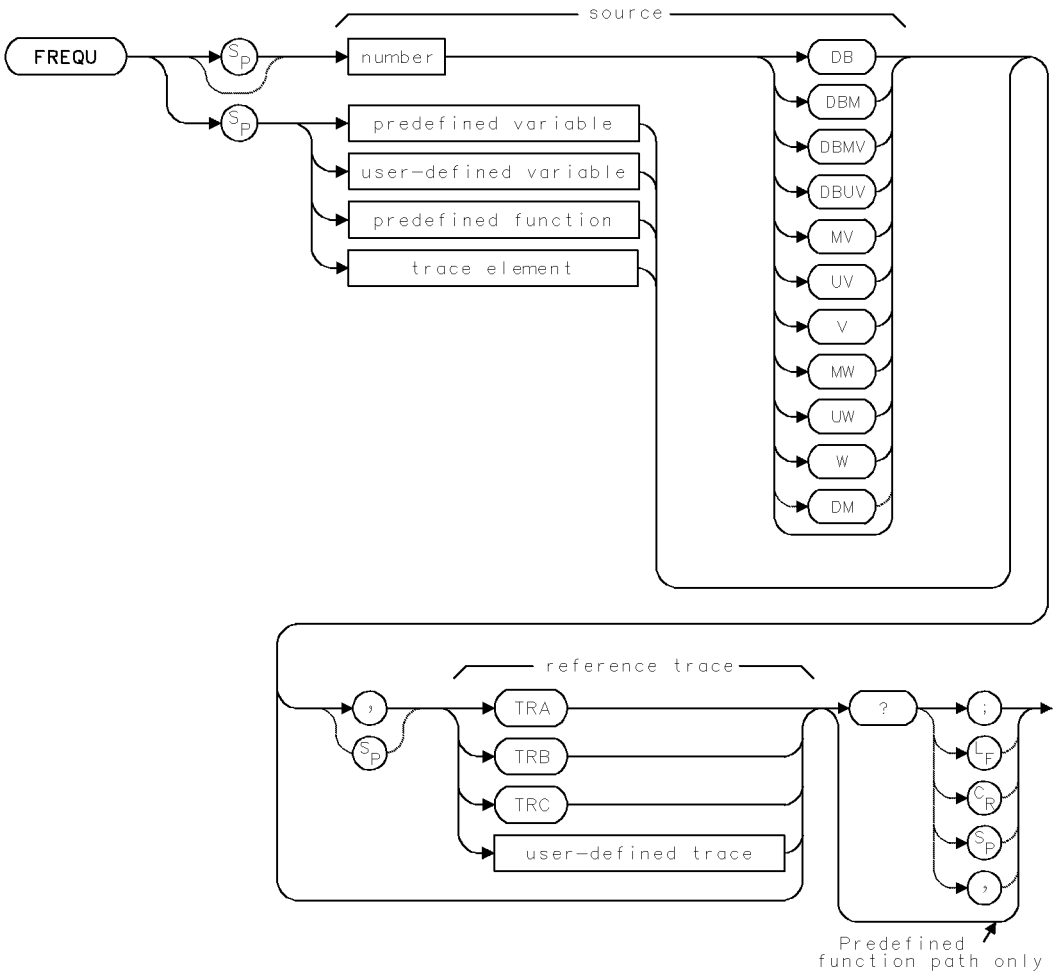


| Item | Description |
|---|---|
| Reference-Trace Length Range | 3 – 1024 position units. Default is 800 when using *TRA*, *TRB*, *TRC*. |
| Source Range | 1 to 1024 position units. |
| Requirements | Be sure data reflects one complete sweep when using *TRA*, *TRB*, *TRC*, or *trace range* for source. SNGLS and TS suggested. TRDEF required when using *user-defined trace*. VARDEF required when using *user-defined variable*. |
| Reference-Trace-Amplitude Range | 0 – 10,000 measurement units for linear trace data. –32,768 – +32,767 measurement units for logarithmic trace data. |

## Example

Determine the frequency that corresponds to a point's relative position on a trace.

```
10 CLEAR 718                                  Initialize analyzer.
20 OUTPUT 718;"IP;";
30 OUTPUT 718;"CLRDSP;"                       Clear graphics from memory.
40 OUTPUT 718;"PU;PA 200,700;"                place pen up, then move it to (200,700).
50 OUTPUT 718;"TEXT$8th element is $;"        Write text.
60 OUTPUT 718;"DSPLY FREQU 8,TRA,7,2;"        Display frequency value of 8th element
                                              in trace A.
70 OUTPUT 718;"TEXT$Hz$;"                     print "Hz" after variable.
```

The FREQU command converts a trace point indicated in **position units** to hertz or, during zero-span mode, to units of time.

A position unit describes the position of a point (also called an element) along the horizontal axis of a trace. The point at the left end of the trace has a position-unit value of 1. The point at the right end of an 800-point trace has a position-unit value of 800.

If a reference trace is not indicated, the number of points in the currently active or last active trace is assumed for FREQU operations and the conversion is based on the frequency values of that trace.

FREQU must be used either as a query or as a predefined function. Form a query by ending the FREQU statement with a question mark (?). When used as a query, FREQU returns the frequency value of the specified trace position.

Use FREQU as a predefined function by incorporating the FREQU statement into the source of any spectrum analyzer command having *predefined function* in its syntax diagram. When used as a source, FREQU uses the frequency value of the specified point for operation by the command that contains FREQU. See "Using Predefined Functions as Sources" under "Math Functions, Variables, and Trace Arrays" in the Programming Fundamentals chapter.

## Predefined-Function Syntax

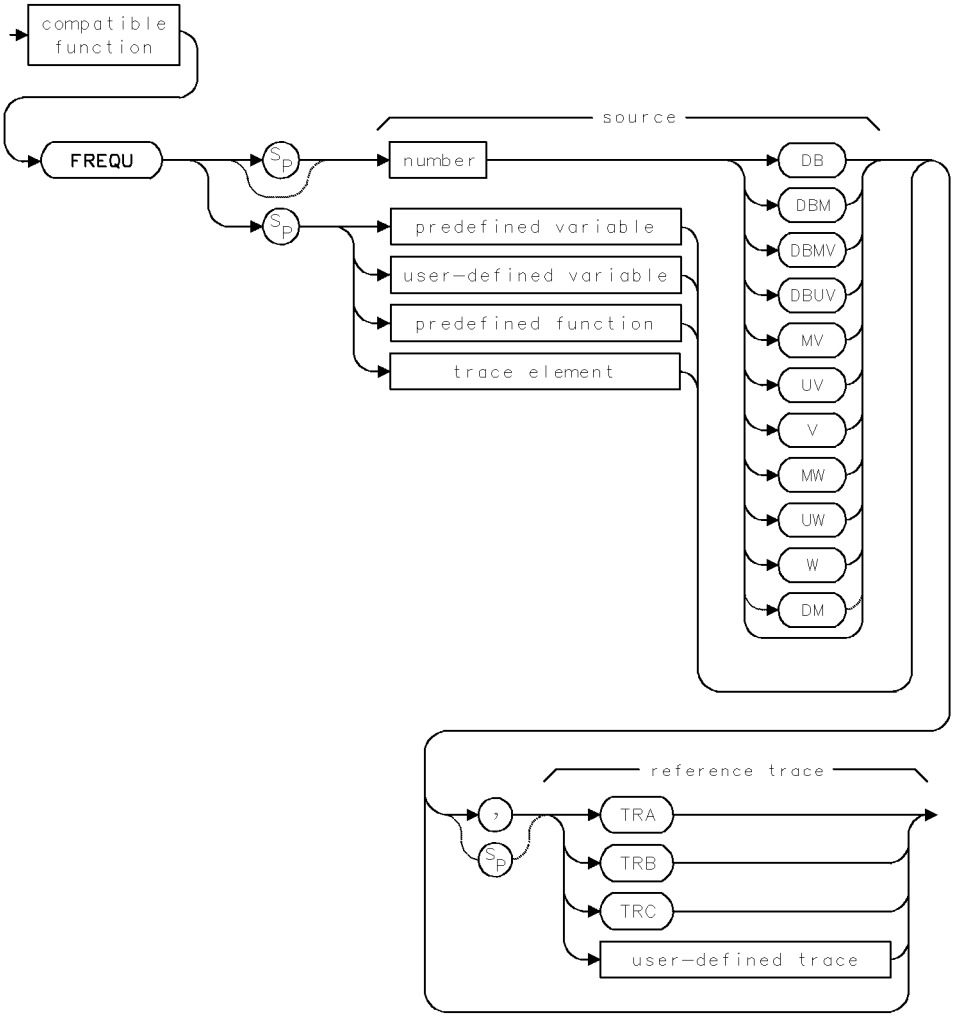


## Query Syntax

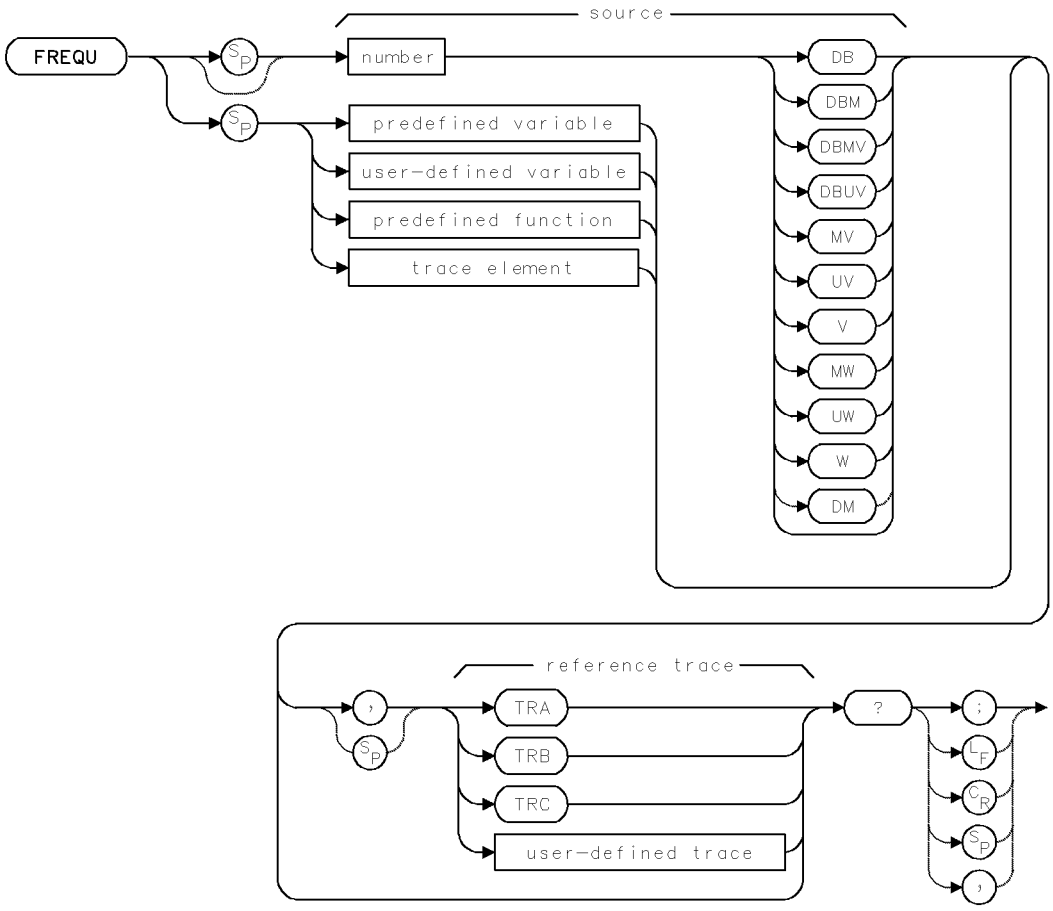
source
FREQU
SP
number
SP
predefined variable
user-defined variable
predefined function
trace element
DB
DBM
DBMV
DBUV
MV
UV
V
MW
UW
W
DM
reference trace
,
SP
TRA
TRB
TRC
user-defined trace
?
;
LF
CR
SP
,

## Query Response

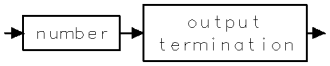

# FS

FULL SPAN

Activate full measurement range (frequency).

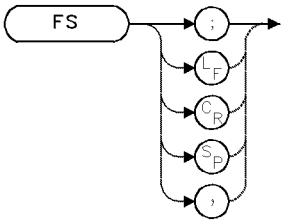


| Item | Description |
|---|---|
| Interdependent Commands | Commands affecting frequency, such as SS, FA, FB, LOSTART, LOSTOP, HNLOCK, CFSS, SP, CF, FOFFSET |

## Example

Activate the full measurement range.

```
10 OUTPUT 718;"FS;TS;"
```

The FS command activates the widest measurement range allowed by the hardware, setting the start and stop frequencies to their minimum and maximum values.

# FULBAND

FULL BAND

Select an external-mixing frequency band.

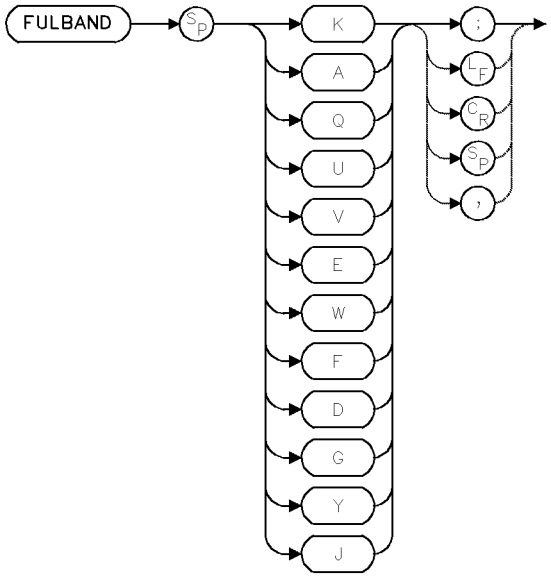


| Item | Description |
|---|---|
| Interdependent Commands | Commands affecting frequency, such as HNLOCK, CF, FA, FB, LOSTART, LOSTOP, SP, FOFFSET, CF |

## Example

Use the FULBAND command to activate the millimeter mixer band.

```
130 OUTPUT 718;"FULBAND W;"   Activate external-mixing band W.
```

The FULBAND command sets the start and stop frequencies for the external-mixing bands when the input on the external-mixer interface module is active. FULBAND also locks the local oscillator harmonic of the selected band (see also HNLOCK). Use FULBAND when measuring with the external-mixer interface module (for example, HP 70907A external millimeter interface module). The external-mixing bands are shown in the following table.

**Table 2-9. External Mixing Bands**

| Band | Harmonic Number and Sign | Frequency Range (GHz) |
|---|---|---|
| K | 6– | 18 – 26.5 |
| A | 8+ | 26.5 – 40.0 |
| Q | 10+ | 33.0 – 50.0 |
| U | 10+ | 40.0 – 60.0 |
| V | 14+ | 50.0 – 75.0 |
| E | 16+ | 60.0 – 90.0 |
| W | 18+ | 75.0 – 110.0 |
| F | 24+ | 90.0 – 140.0 |
| D | 30+ | 110.0 – 170.0 |
| G | 36+ | 140.0 – 220.0 |
| Y | 42+ | 170.0 – 260.0 |
| J | 50+ | 220.0 – 330.0 |

# FUNCDEF

DEFINE FUNCTION

Define a list of spectrum analyzer commands that are executed whenever a user-defined function is encountered.

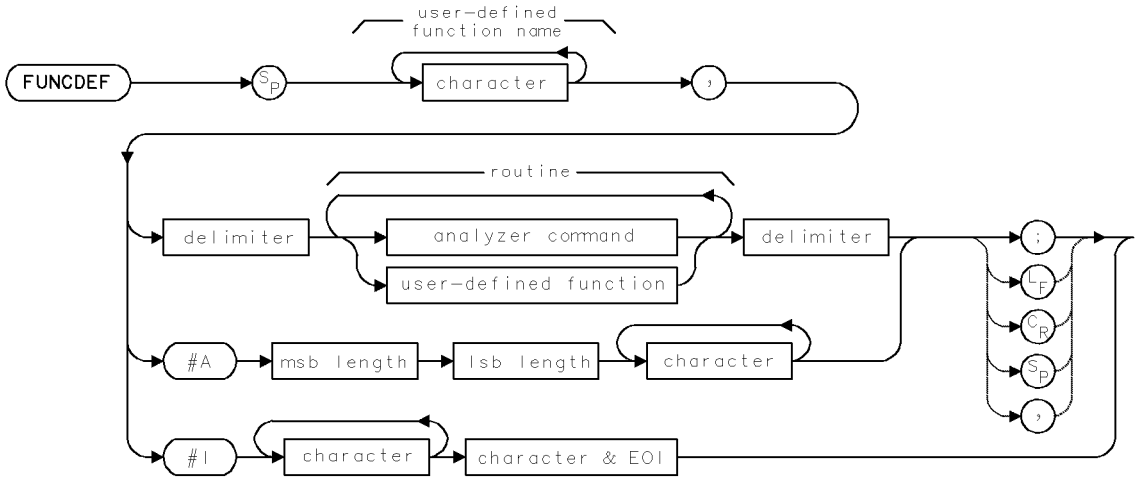


| Item | Description |
|---|---|
| Function-Name Range | 1 – 12 characters: A – Z, 0 – 9, and underscore (_). First character must be a letter. Numbers must be preceded by underscore. |
| Requirements | Requires internal memory. See Appendix D for commands that consume memory. |
| Interdependent Commands | DISPOSE, FORMAT, LOAD, RCLD, PROTECT, PURGE |

## Example

Create a user-defined function, then assign it to a user-defined key.

```
5 CLEAR 718                              Initialize analyzer.
7 OUTPUT 718;"IP;"
10 OUTPUT 718;"VARDEF H_SPAN,0;"         Define user-defined variable equal to 0.
20 OUTPUT 718;"FUNCDEF S_HIFT,^";        Create user-defined function, called S_HIFT.
                                         Shift divides the span by two and adds the
                                         results to the center frequency. This increases
                                         the measurement range. The "^" delimit the
                                         definition.
30 OUTPUT 718;"DIV H_SPAN,SP,2;";
40 OUTPUT 718;"ADD CF,CF,H_SPAN;";
50 OUTPUT 718;"^;"
60 OUTPUT 718;"KEYDEF 7,S_HIFT,%SHIFT_UP%;"
```

*Assign the user-defined function to a user-defined key, called* `SHIFT_UP`.

```
70 OUTPUT 718;"DSPMODE CAT;"
80 OUTPUT 718;"CF 300MHZ;SP 1MHZ;"
90 LOCAL 718
```

*Display catalog of currently selected user memory. Notice the listing includes the S_HIFT function and* `SHIFT_UP` *key.*

*press* (USER) *to access* `SHIFT_UP` *key.*

## Example

Execute a user-defined function in a computer program.

```
10 OUTPUT 718;"S_HIFT;"
```

The FUNCDEF command defines a routine consisting of spectrum analyzer commands, assigns it a label, then stores the routine and its label in internal memory. FUNCDEF does *not* execute the routine. FUNCDEF *stores* the routine. *After* FUNCDEF is executed, the routine is executed whenever the *function name* is encountered.

The function name and the list of commands it executes form a user-defined function. Once user-defined functions are stored, they can be executed with the front panel keys, with other user-defined functions, or with computer programs (as you would other spectrum analyzer commands).

Delete user-defined functions from internal memory with the DISPOSE command. Use the PROTECT command to prevent inadvertent erasure with DISPOSE. PURGE and FORMAT also erase user-defined functions.

---

**Note** PROTECT does not prevent erasure or overwriting with the PURGE, LOAD, RCLD, or ERASE command.

---

Use ABORT to stop operation of user-defined functions. Use IF/THEN, REPEAT/UNTIL, or RETURN to alter their operation.

Do not use existing user-defined function names or reserved words as labels for user-defined functions. Do not execute a user-defined function within its FUNCDEF statement. (Refer to the index or HP 70900A/B LO module firmware note for a list of reserved words.)

When using string- and block-data fields to transfer command definitions, be sure to use compatible terminators. Also, any block-field commands within the list must be the absolute type (#A-block), because the EOI terminator of the #I-block type terminates the entire FUNCDEF command prematurely. (See "Transmission Sequence of Data on the HP-IB" under "Data Transfer to Controller" in the Programming Fundamentals chapter.) See "Storing New Functions in the Spectrum Analyzer." See also ACTDEF, KEYDEF, RETURN, ABORT, PROTECT, and DISPOSE.

## Syntax to Execute a User-Defined Function

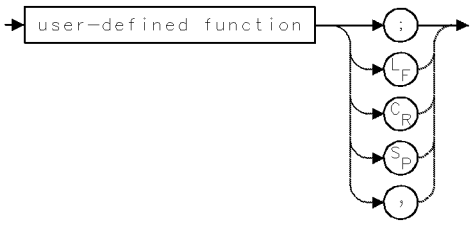

## Query Syntax

Request the definition of the function.

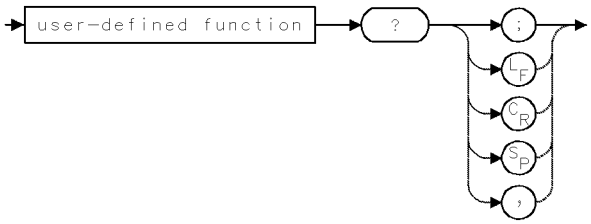


## Query Response

Returns the definition of the function.

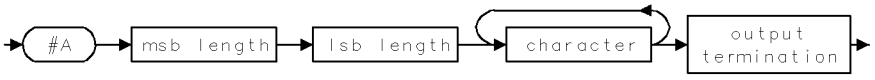

# GRAPH

GRAPH TRACE

Display stored trace data, resized to a different scale.

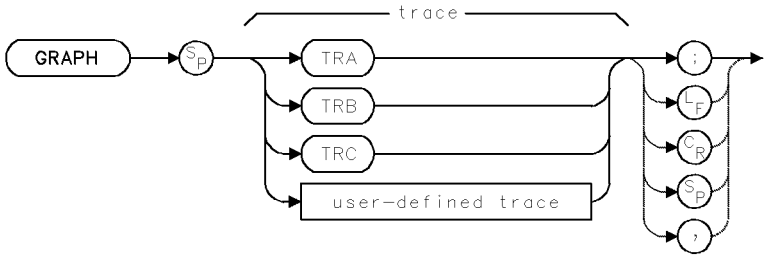


| Item | Description |
|---|---|
| Trace-length Range | 3 –1024 position units. Default for *TRA*, *TRB*, *TRC* is 800 position units. |
| Trace-Amplitude Range | For linear trace data, 0 – 10,000 measurement units. For logarithmic data, – 32,768 – +32,767 measurement units. |
| Requirements | Use PD to place pen down, except during reference-graphics mode. TRDEF required when using *user-defined trace*. |
| Interdependent Commands | TRCOND, CLRDSP, SCALE, IT |

## Example

```
10 OUTPUT 718;"CLRDSP;"                    Clear graphics from memory. Reset origin
                                           to 0,0 and scale to 0 to 1000 for X and Y.
20 OUTPUT 718;"IWINDOW 1000,600;"          Reduce size of analyzer trace and graticule.
30 OUTPUT 718;"MXMH TRA;"                  Retain maximum values of trace A.
40 OUTPUT 718;"OR 0,600;"                  Set origin to 0,600.
50 OUTPUT 718;"LINET 7;"                   Select line size for drawing.
60 OUTPUT 718;"PD;GRID 100,30,10,10;"      Draw grid.
70 OUTPUT 718;"DWINDOW 1000,300,TRA;"      Create a window scaled to display trace A.
80 OUTPUT 718;"TS;"                        Sweep trace A.
90 OUTPUT 718;"LINET;"                     Select solid line for drawing.
100 OUTPUT 718;"PU;PA 1,TRA[1];"           place pen at starting point of trace A.
110 OUTPUT 718;"PD;GRAPH TRA;"             place pen down and draw trace A in
                                           window (at top of display).
120 OUTPUT 718;"CLRW TRB;"                 Measure with trace B (in active area at
                                           bottom of display).
130 OUTPUT 718;"BLANK TRA;"                Blank trace A.
```

Use the GRAPH command to draw trace information inside a window created with the DWINDOW command. The GRAPH command draws previously stored measurement results, sized according to the current scale units determined by the SCALE command, or the DWINDOW command if GRAPH is used with DWINDOW. If no units are specified, the default scale units are 0 to 1000 for both X and Y (set by CLRDSP).

The graph can be drawn at the current pen position, or can be positioned with the OR command during the reference-graphics mode. For example, in the preceding example, lines 100 and 110 can be replaced with `IT 1;GRAPH TRA;`. Notice that the PD command is required except during the reference-graphics mode.

See SCALE, DWINDOW. See also "Creating Graphics" in the Programming Fundamentals chapter.

# GRAT

GRATICULE

Blank the graticule.

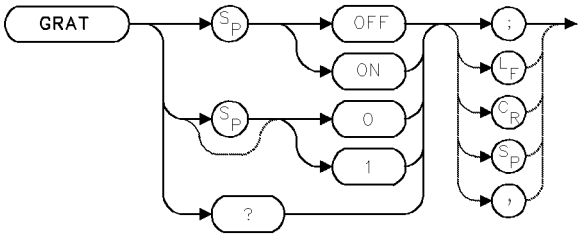


| Item | Description |
|---|---|
| Preset State | GRAT ON |

## Example

Use GRAT to turn off the graticule.

```
10 OUTPUT 718;"GRAT OFF;"     Turn off the graticule.
```

The graticule on the analyzer display may be turned on and off with this command.

## Query Response

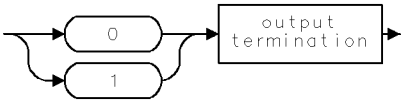

# GRATSCRL

GRATICULE SCROLL

Controls the positioning of the displayed horizontal graticule lines.

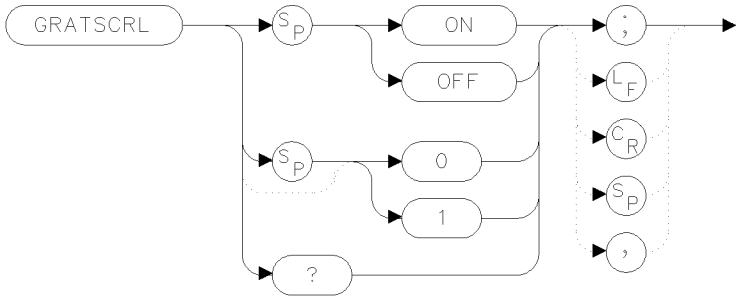


xgrscl

| Item | Description |
|---|---|
| Preset State | GRATSCRL OFF |

## Example

```
100 OUTPUT 723;"GRATSCRL ON;"
```

When a log scale is displayed, the GRATSCRL command positions the horizontal graticule lines on multiples of the current dB-per-div scale. When GRATSCRL is set to off, the horizontal graticule lines are evenly spaced between the bottom and top screen values.

When a linear display scale is used, the horizontal graticule lines are evenly spaced between the bottom and top screen values regardless of the value of GRATSCRL.

## Query Response

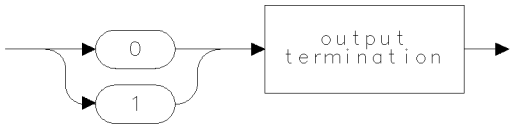


qgen0

# GRID

DISPLAY GRID

Draw a grid.

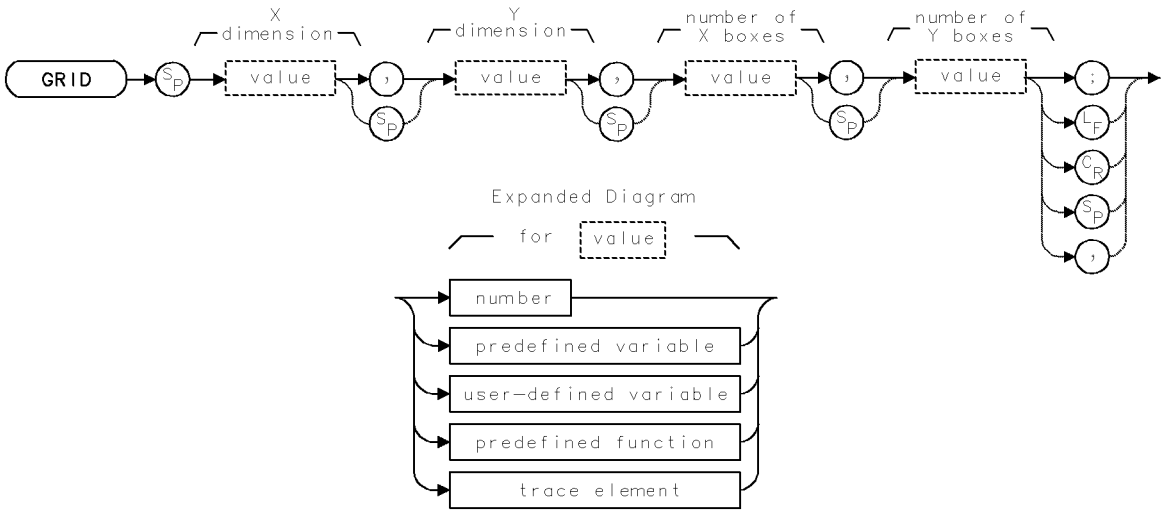


| Item | Description |
|---|---|
| X-Dimension Range | Affected by SCALE command. Default range is 0 – 1000. |
| Y-Dimension Range | Affected by SCALE command. Default range is 0 – 1000. |
| Number-of-X-Boxes-Range | Depends on scale resolution. |
| Number-of-Y-Boxes-Range | Depends on scale resolution. |
| Requirements | PD required to place pen down. |
| Restrictions | Cannot be executed after `DWINDOW ON` VARDEF required when using *user-defined variable.* |
| Interdependent Commands | SCALE, PEN, IT, OR, PA, PR, LINET |

## Example

Use GRID to draw a grid on the analyzer display.

```
30 OUTPUT 718;"CLRDSP;"                 Clear graphics from memory.
40 OUTPUT 718;"GRAT OFF;"               Turn off the graticule.
50 OUTPUT 718;"SCALE 112,911,17,338;"   Define scale.
60 OUTPUT 718;"OR 112,48;"              Specify origin.
70 OUTPUT 718;"LINET 7;"                Select dotted line for drawing.
80 OUTPUT 718;"PD;GRID 160,64,5,4;"     place pen down. Draw large grid.
```

The grid command draws a grid on the analyzer display.

The *X* and *Y dimensions* specify the horizontal and vertical length of a single box in the grid.

*Number of X boxes* and *Number of Y boxes* specify the number of boxes on the X and Y axis of the grid.

The grid is positioned at the current pen position or at the item origin during the reference-graphics mode. See "Creating Graphics" in the Programming Fundamentals chapter. Also see LINET and OR.

# HD

HOLD

Blank the active function readout and disable the front panel knob, step keys, and numeric keypad.

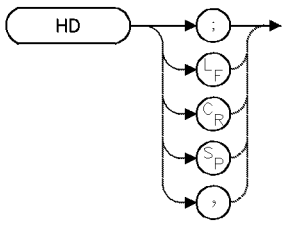


## Example

Use HD to blank the active function readout.

```
120 CLEAR 718                 Initialize analyzer
130 OUTPUT 718;"IP;"
140 OUTPUT 718;"CF 1GHZ;"     Set center frequency. Notice that the active function area
                              (left side of graticule) displays the center frequency value.
150 OUTPUT 718;"WAIT 4S;"     Wait 4 seconds
160 OUTPUT 718;"HD;"          Blank the active function readout.
```

The HD command blanks the active function readout and disables the front panel numeric keypad, step keys, and knob, until another active function is executed.

# HNLOCK

Harmonic Lock

Limit external mixing to one local oscillator harmonic.

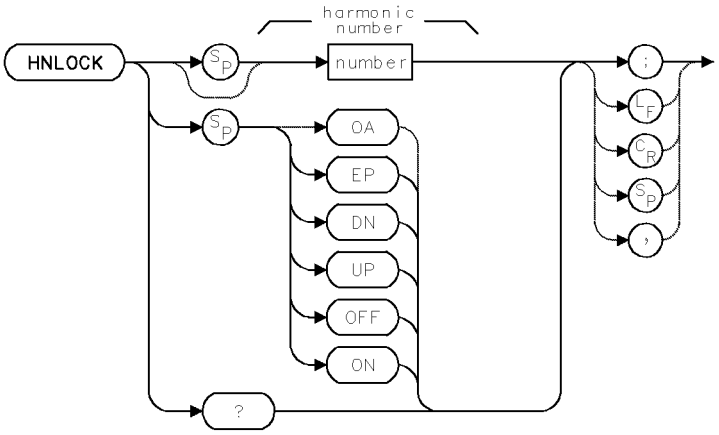


| Item | Description |
|---|---|
| Harmonic-Number Range | Actual range is hardware dependent. Firmware range is ±100. |
| Step Increment | 1 |
| Requirements | Input port of external mixer interface module must be active (for example, HP 70907). |
| Interdependent Commands | Commands affecting frequency, such as LOSTART, LOSTOP, FA, FB, SPAN, CF, FULBAND, FOFFSET |
| Preset State | `HNLOCK 0; HNLOCK OFF` |

## Example

Use HNLOCK to limit mixing to one local oscillator harmonic.

```
10 OUTPUT 718;"INPUT 1;"        Activate input on external mixer interface.
20 OUTPUT 718;"HNLOCK 18;"      Lock the harmonic number to 18.
```

HNLOCK limits mixing to one local oscillator harmonic during external-mixer applications. Once a harmonic is locked, a different frequency range cannot be measured without unlocking the harmonic with `HNLOCK OFF`. Be sure the input port on the external-mixer-interface module is active before executing HNLOCK. (See INPUT and PINPUT.)

The HNLOCK command determines which local oscillator harmonic is used in the mixing equation during external mixing, as follows:

$$F_s = N \times F_{LO} \pm F_{IF}$$

where

$F_s$ is the displayed response
$F_{LO}$ is the local oscillator fundamental frequency, which sweeps from 3 GHz to 6.6 GHz.
N is local oscillator harmonic number
$F_{IF}$ = 321.4 MHz

**HNLOCK**

HNLOCK specifies the sign (positive or negative) of the IF component in the mixing equation and of the local oscillator harmonic number.

For example, 6– limits measurements to frequencies from 17.6786 GHz to 39.2786 GHz:

$$F_s = N \times F_{LO} - F_{IF}$$
$$17.6786\ \text{GHz} = 6 \times 3\ \text{GHz} - 321.4\ \text{MHz}$$
$$39.2786\ \text{GHz} = 6 \times 6.6\ \text{GHz} - 321.4\ \text{MHz}$$

The LOSTART and LOSTOP commands may be used in conjunction with HNLOCK to specify the measurement range. For example, if LOSTART and LOSTOP specify 4 and 5 GHz respectively, 6– limits measurements from 23.679 GHz to 29.679 GHz:

$$F_s = N \times F_{LO} - F_{IF}$$
$$23.679\ \text{GHz} = 6 \times 4\ \text{GHz} - 321.4\ \text{MHz}$$
$$29.679\ \text{GHz} = 6 \times 5\ \text{GHz} - 321.4\ \text{MHz}$$

If the selected harmonic is not compatible with the current local oscillator start and stop frequencies specified by LOSTART and LOSTOP, the frequencies are automatically changed, retaining the center-frequency setting if possible.

## Query Response

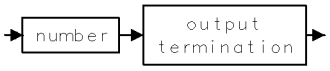

# HP

OPERATING MODE

Set the spectrum analyzer emulation mode.

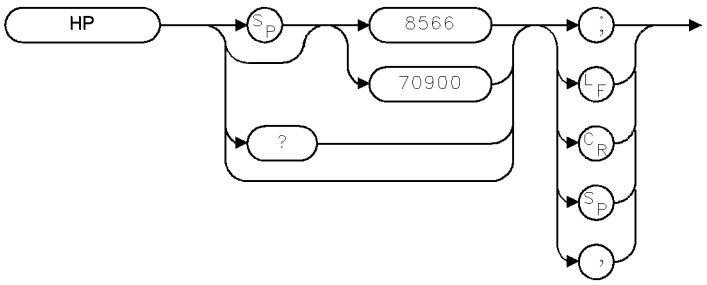


XHP

| Item | Description |
|---|---|
| Preset State | HP70900 |
| Interdependent Commands | all HP 8566 commands |

## Example

```
10 OUTPUT 718;"HP 8566;"
```

*Select 8566 emulation mode.*

The HP command allows the user to specify the emulation mode as either 8566 or 70900. The query returns the current mode.

While in 8566 emulation mode, many of the remote commands and returned data switch their format and function similar to that of an HP 8566B spectrum analyzer.

Instrument preset, power cycle, and the ERASE command do not change the mode. Only this command or removal of the hardware RAM will adjust the emulation mode.

## Query Response

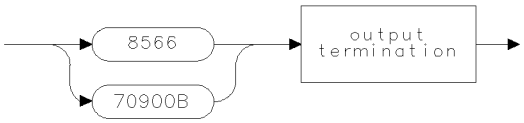


QHP

# ID

IDENTIFICATION

Return the model number of the system **master**.

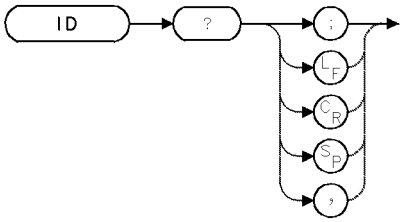


## Example

Return the model number of the system-controlling module.

```
130 OUTPUT 718;"ID?;"     Return value
140 ENTER 718;N$          Assign value to computer string variable.
```

## Query Response

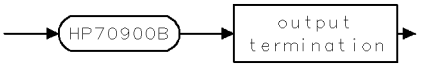

# IDCF

IDENTIFIED SIGNAL TO CENTER FREQUENCY

If a real signal is identified by the SIGID command, move the signal to the center of the measurement range.

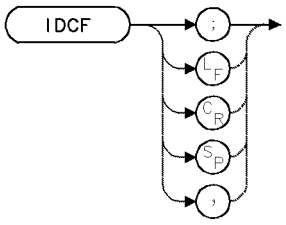


| Item | Description |
|---|---|
| Requirements | Real signal must be identified. |

## Example

Tune the identified signal to the center of the measurement range. (This example operates with a HP 71200C modular spectrum analyzer.)

```
100 CLEAR 718                          Initialize analyzer.
110 OUTPUT 718;"IP;"
120 OUTPUT 718;"SP 1MHZ;CF 300MHZ;"    Set measurement range.
130 OUTPUT 718;"TS;"                   Sweep measurement range.
140 OUTPUT 718;"SIGID AUTO;"           Activate the signal-identification routine to
                                       check a signal.
150 OUTPUT 718;"IDCF;"                 Change the center frequency to bring the iden-
                                       tified signal to the center of the display.
```

The IDCF command tunes the center frequency to the signal that has been identified by the signal-identification routines. See SIGID.

# IDFREQ

IDENTIFIED SIGNAL FREQUENCY

Return frequency of real signal, or return zero if signal was false.

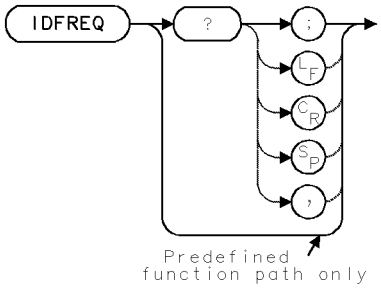


| Item | Description |
|---|---|
| Requirements | SIGID |

## Example

Return the frequency of the identified signal.

(Connect calibrator signal to analyzer input.)

```
100 CLEAR 718                          Initialize analyzer.
110 OUTPUT 718;"IP;";
120 OUTPUT 718;"SP 1MHZ;CF 300MHZ;"    Set measurement range.
130 OUTPUT 718;"TS;"                   Sweep measurement range.
140 OUTPUT 718;"SIGID AUTO;"           Activate the signal identification routine to
                                       check a signal.
150 OUTPUT 718;"IDFREQ?;"              Return frequency of identified signal to computer.
160 ENTER 718;A                        Assign value to computer variable.
```

The IDFREQ command returns the frequency of the last signal identified with the SIGID command. IDFREQ returns a "0" if no signal is identified, or if the identified state has been cleared with instrument preset (IP).

IDFREQ must be used as either a query or as a source for other analyzer commands. Form a query by ending the IDFREQ statement with a question mark (?). When used as a query, IDFREQ returns the frequency of the identified signal to the computer.

Use IDFREQ as a source by incorporating the IDFREQ statement into the source of any spectrum analyzer command having *predefined function* in its syntax diagram. When used as a source, IDFREQ uses the frequency of the identified signal for operation by the command that contains IDFREQ. See "Using Predefined Functions as Sources" under "Math Functions, Variables, and Trace Arrays" in the Programming Fundamentals chapter.

## Predefined-Function Syntax

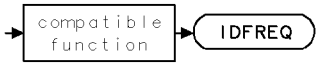


## Query Syntax

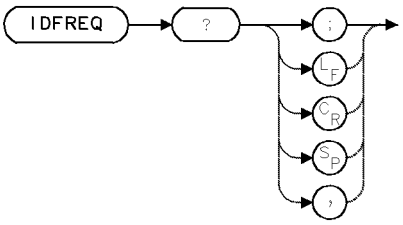


## Query Response

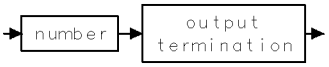

# IDMODE

SIGNAL-IDENTIFICATION MODE

Choose signal-identification method executed by SIGID command.

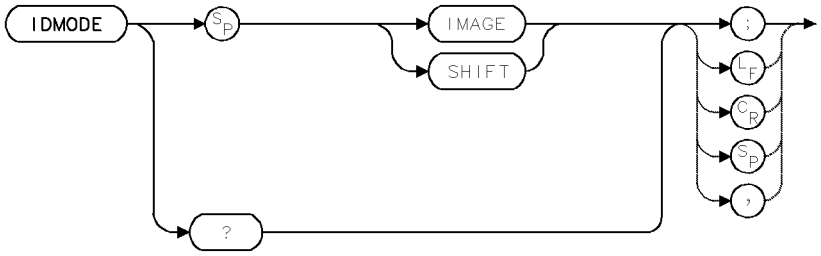


| Item | Description |
|---|---|
| Interdependent Commands | SIGID and commands that change the frequency of the measurement range, such as NSTART, NSTOP, CF, FA, FB, LOSTART, LOSTOP, HNLOCK, FS, SP |
| Preset State | `SIGID SHIFT` is active if the selected input hardware supports this function. Otherwise, `SIGID IMAGE` is active. |

## Example

Use the IDMODE command to activate the image signal-identification method.

```
110 CLEAR 718                    Initialize analyzer.
120 OUTPUT 718;"IP;"
130 OUTPUT 718;"IDMODE IMAGE;"   Activate image mode
140 OUTPUT 718;"IDMODE?;";       Return the mode of signal identification to the computer.
```

The IDMODE command chooses the signal-identification method used when the SIGID command is executed. The signal-identification method tests a signal to determine if it is a true response or an image. Execute the IDMODE command before executing the SIGID command.

`IDMODE IMAGE` activates the image method, which identifies a signal by searching for any true response, $F_s$, that could have produced that signal. For each value of $F_s$ found, the analyzer sweeps and looks for an image response at $F_s \pm 2IF$.

`IDMODE SHIFT` activates the shift method, which identifies a signal by offsetting the IF and LO frequencies a known amount.

The signal-identification process varies, depending on whether `SIGID AUTO`, `SIGID MAN`, or `SIGID OFF` is executed.

## Sigid Auto Mode

SIGID AUTO activates an automatic mode of signal identification.

If the marked signal is a true response, SIGID AUTO displays the frequency of the signal on the spectrum analyzer display. IDFREQ? can be executed to return the value of the identified signal to the computer. If the marked signal is a false response, SIGID AUTO displays a prompt that signal identification failed; IDFREQ? returns a zero to the computer.

## Sigid Man or Sigid Off Mode

Both SIGID MAN and SIGID OFF activate a manual mode of signal identification. During manual mode, the position of the marked signal is offset every other sweep. The degree of offset indicates whether the signal is a true response or a false response.

If IDMODE SHIFT has been executed, real signals are offset less than one half of a division every other sweep, and false signals are offset more than one division.

If IDMODE IMAGE has been executed, the position of a marked real signal remains unchanged every other sweep. If the marked signal is a false response, its position is offset more than one division every other sweep.

## Selecting the Identification Method

The choice of identification method depends on the nature of the incoming signals and the configuration of the spectrum analyzer. For most measurement situations, the image-identification method is the best choice. However, the image method does not identify signals measured in the 0 – 2.9 GHz frequency band. The shift method is available in systems containing a microwave RF section, HP 70905 or HP 70906.

The NSTART and NSTOP commands can speed the identification process when the image method and automatic mode have been selected.

See SIGID, NSTART, and NSTOP. See also *HP 70000 Modular Spectrum Analyzer Operating Manual*, "Signal-Identification Functions" in the Softkey Reference chapter for more information about the shift and image methods.

## Query Response

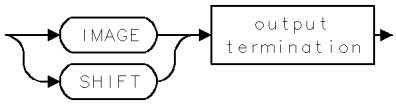

# IDN

IDENTIFICATION NUMBER

Query for the current firmware Version.Update.Fix (V.U.F.) code.

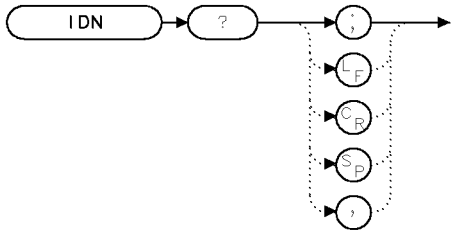


XIDN

## Example

```
130  OUTPUT 723;"IDN?;"          Query value
140  ENTER 723;N$                Assign value to computer string variable.
```

## Query Response

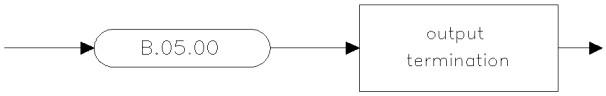


QID

# IDSTAT

SIGNAL-IDENTIFICATION STATUS

Return status of signal detected by SIGID command: real, false, or not found.

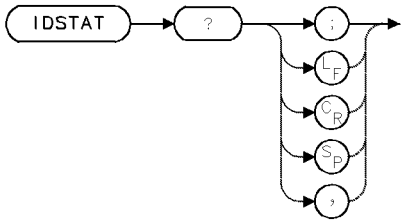


| Item | Description |
|---|---|
| Requirements | Signal must be processed by SIGID function. |
| Interdependent Commands | Commands that affect frequency, such as IDMODE, NSTART, NSTOP, CF, FA, FB, LOSTART, LOSTOP, HNLOCK, FS, SP |

## Example

Return status of last identified signal.

```
110 CLEAR 718                 Initialize analyzer.
120 OUTPUT 718;"IP;"
130 OUTPUT 718;"IDSTAT?;"     Return the status of the last signal identified
140 ENTER 718;A
```

The IDSTAT command returns the status of the last signal identified by the signal identification routine (SIGID).

- A “0” is returned if no signal is found (or if IP has been executed after SIGID).
- A “1” is returned if a real signal was identified in the current frequency band.
- A “−1” is returned if the signal was identified in a different frequency band, meaning the tested signal is false.

## Query Response

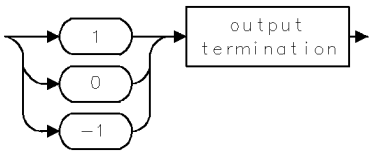

# IF/THEN

IF/THEN/ELSIF/ELSE/ENDIF

Execute a list of commands if conditions of your choosing are met.

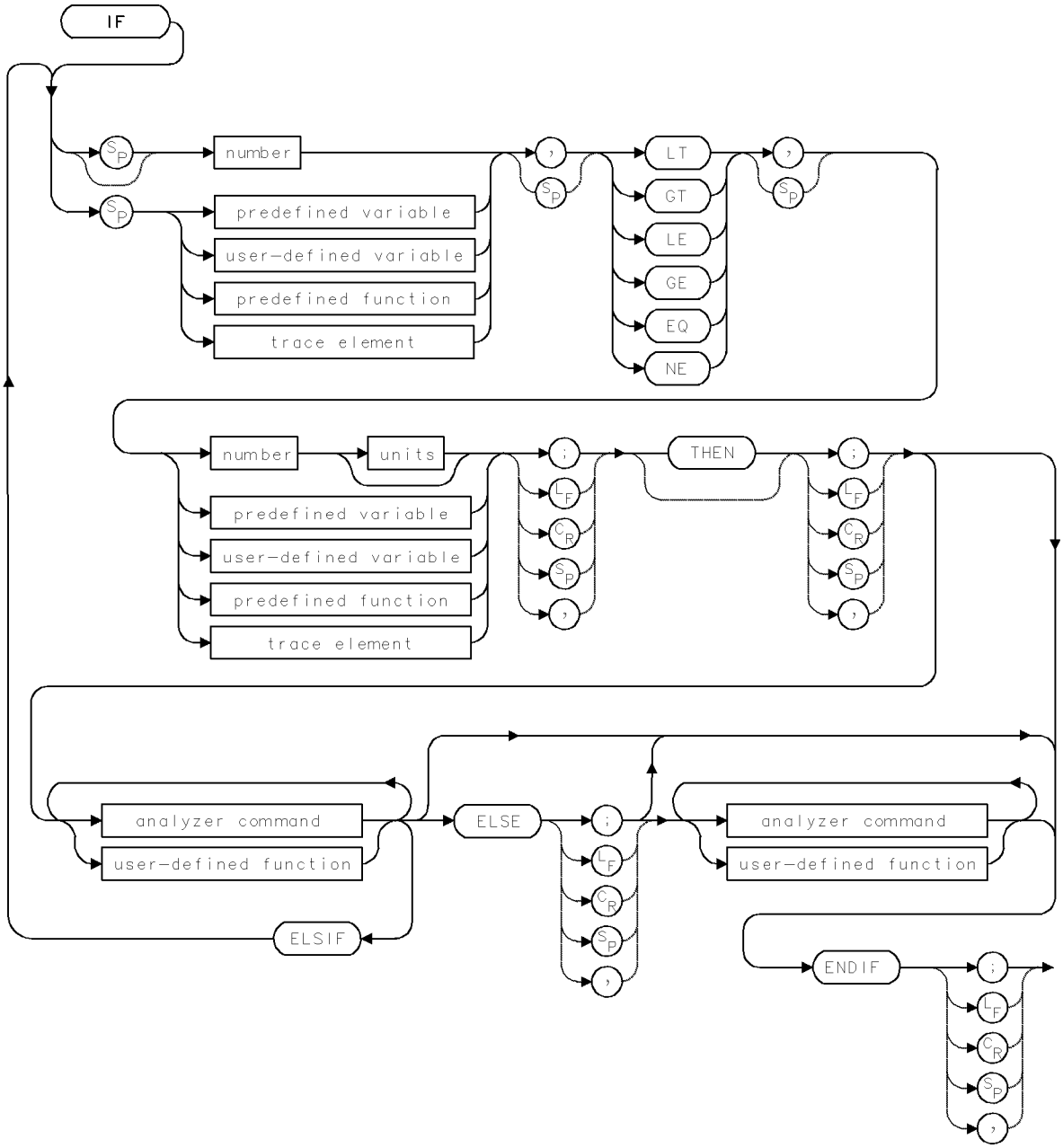

## Example

Print a message depending on the level of a measured signal.

```
20 CLEAR 718                                                    Initialize analyzer.
30 OUTPUT 718;"IP;"
40 OUTPUT 718;"SNGLS;"                                          Activate single-sweep mode.
50 OUTPUT 718;"PA 250,500;"                                     Set pen position
60 OUTPUT 718;"SP 1MHZ;CF 300MHZ;"                              Set measurement range.
70 OUTPUT 718;"TS;MKPK HI;"                                     Measure, then mark high-
                                                                est signal.
80 OUTPUT 718;"IF MKA,LT,-10.5DBM;THEN;TEXT @FAIL@
90 OUTPUT 718;"ELSIF MKA,GT,-9.5DBM;THEN;TEXT @FAIL@;"
100 OUTPUT 718;"ELSE TEXT @LEVEL OK.@;ENDIF;"                   If signal level is between
                                                                -10.5 and -9.5 dBm, print
                                                                "LEVEL OK." If otherwise,
                                                                print "FAIL"
```

The IF/THEN/ELSIF/ELSE/ENDIF commands compare the values of two operands according to the following conditions:

- Less than (LT)
- Greater than (GT)
- Less than or equal to (LE)
- Greater than or equal to (GE)
- Equal to (EQ)
- Not equal to (NE)

If the values of the operands satisfy the specified condition, the analyzer commands following THEN are executed. If the condition is not satisfied, the analyzer commands following ELSE, ELSIF, or ENDIF are executed.

THEN is a no-operation function provided for syntax clarification.

IF and ELSE delimit two operands and their comparison condition.

ELSIF delimits an alternate comparison test.

ELSE and ENDIF delimit analyzer commands that are executed if the condition(s) are not satisfied.

ENDIF ends the comparison construct.

# IFTKNL

SCALED FAST FOURIER TRANSFORM KERNAL

Perform a 16-bit, discrete Fourier transform.

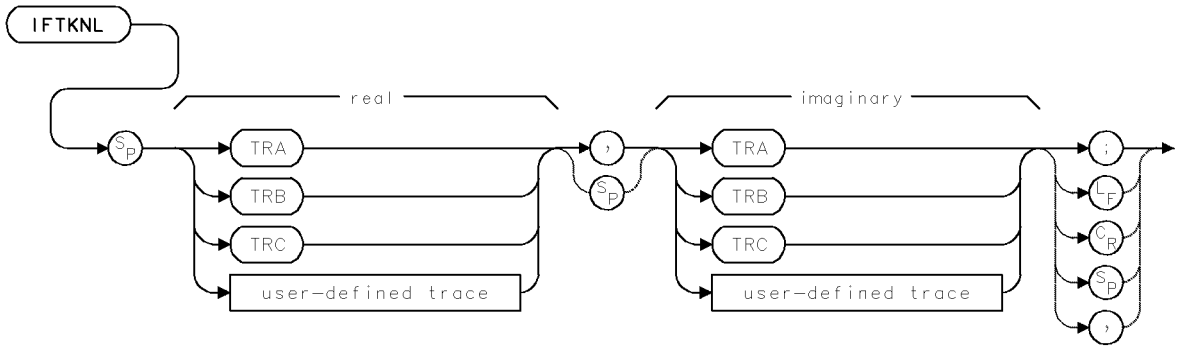


The IFTKNL command performs a 16-bit, discrete Fourier transform on the specified traces, overlaying them with the results multiplied by the length of each trace. Both traces must be the same length, and the length must be a power of two. The two traces represent the real and imaginary components of one complex-value trace. IFTKNL does no other normalizing, scaling, clipping, or magnitude determination.

The operation of IFTKNL and the FFT-kernal command, FFTKNL, are identical except that IFTKNL returns results which are scaled by the length of the traces.

If IFTKNL is used as an inverse, discrete Fourier transform, the results are in time-reversed order. To do a inverse, discrete Fourier transform, the imaginary trace must have its sign changed before and after the IFTKNL.

# INPUT

SELECT INPUT

Activate input port.

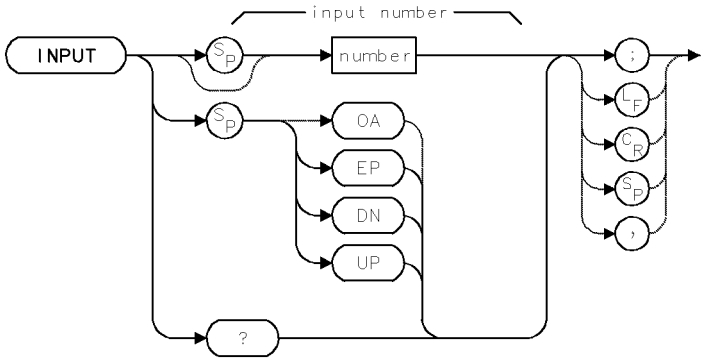


| Item | Description |
|---|---|
| Step Increment | 1 |
| Interdependent Commands | CNVLOSS, CALFREQ, CALPWR, CALSRC, COUPLE, LN, MBMAX, MBMIN, OPTMODE, OPTPWR, PWRBAR, PWRBARON, PWRMODE, RSPSVTY, ZERO |
| Preset State | Determined by PINPUT |

## Example

Activate the unpreselected input in a spectrum analyzer that contains two front ends: an RF section and a preselector.

```
10 OUTPUT 718;"INPUT 2;"
```

The INPUT command activates the desired input port by specifying its number. Whenever a new input port is selected for measurements, the analyzer should be recalibrated for that input with the CAL command.

At power-up, all of the input ports are numbered consecutively beginning with 1, depending on the kinds of modules forming the system. Press the `select input` key to learn the input numbers of all input ports in the system. Input numbers are indicated on the key labels.

## Query Response

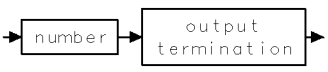

# INPUTMOD

INPUT-PORT NUMBER ▸ MODULE NUMBER

Return module reference number.

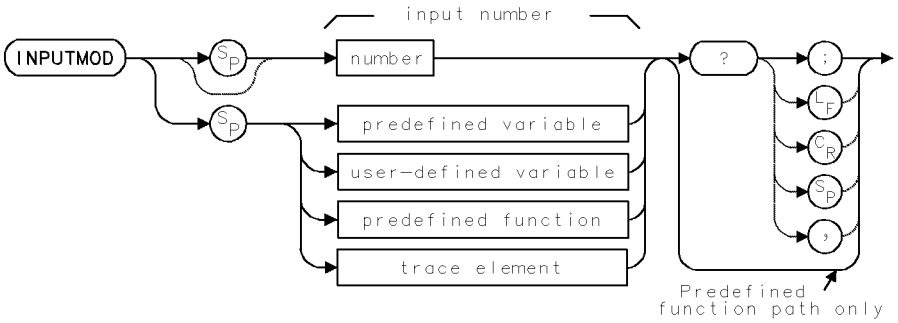


| Item | Description |
|---|---|
| Interdependent Commands | PINPUT, INPUT, MODADD |

## Example

Use the MODADD and INPUTMOD commands to learn the HP-MSIB address of the RF-section module in a system containing the following modules.

- HP 70600 Preselector
- HP 70905 RF Section
- HP 70902 IF Section
- HP 70900 Local Oscillator

First, determine the input number of the RF Section. (Press (MENU), `State`, select input to learn the input number, which is on the key label for the RF section.) Next, use the INPUTMOD command to obtain the reference number that corresponds to the RF-section input number:

```
10 OUTPUT 718;"INPUTMOD 2?;"      Return the reference number of the module (RF
                                  Section) at input port 2
20 ENTER 718;R                    Assign reference number to R.
30 OUTPUT 718;"MODADD";R;"?;"     Return the row and column number of the module
                                  with reference number R (at input port 2)
40 ENTER 718;N,M                  Assign the row number to N. Assign the column
                                  number to M
```

Each module in a modular measurement system has a **reference number**. If it has an input port, it also has an **input number**. The INPUTMOD command returns the reference number corresponding to the specified input number. The reference number is required when using the MODADD command to return the HP-MSIB address of a module to a computer.

The reference numbers are assigned automatically when power is applied. The numbers of the input ports vary with the combination of modules in the system. At power-up, all of the input ports are numbered consecutively beginning with 1, depending on the kinds of modules forming the system. Press the `select input` key to learn the input numbers of all input ports in the system. The input numbers are on the key labels.

INPUTMOD must be used as either a query or as a source for another analyzer command function. Form a query by ending the INPUTMOD statement with a question mark (?). When used as a query, INPUTMOD returns the reference number to the computer.

Use INPUTMOD as a source by incorporating the INPUTMOD statement into the source of any spectrum analyzer command having *predefined function* in its syntax diagram. When used as a source, INPUTMOD uses the reference number for operation by the command that contains INPUTMOD. See "Using Predefined Functions as Sources" under "Math Functions, Variables, and Trace Arrays" in the Programming Fundamentals chapter.

See INPUT and PINPUT.

## Predefined-Function Syntax

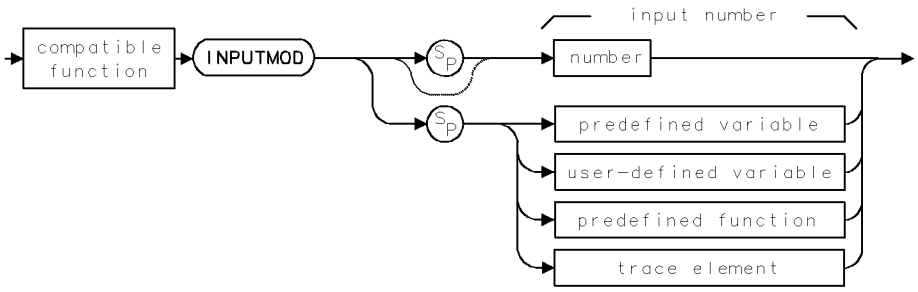


## Query Syntax

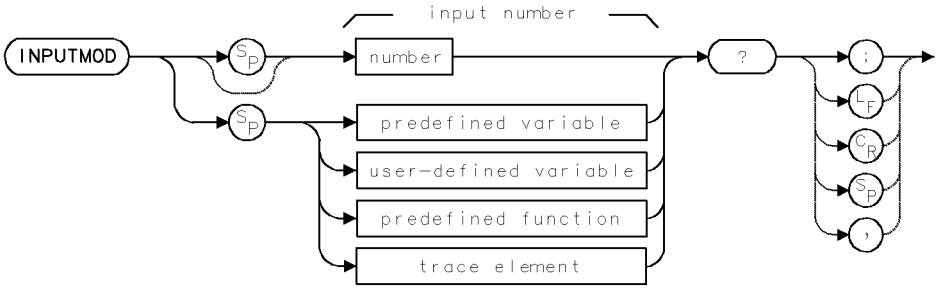


## Query Response

Returns 0 if the input port number is out of range.

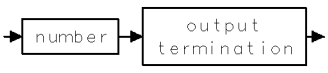

# INT

INTEGER

Compute integer value(s) in source.

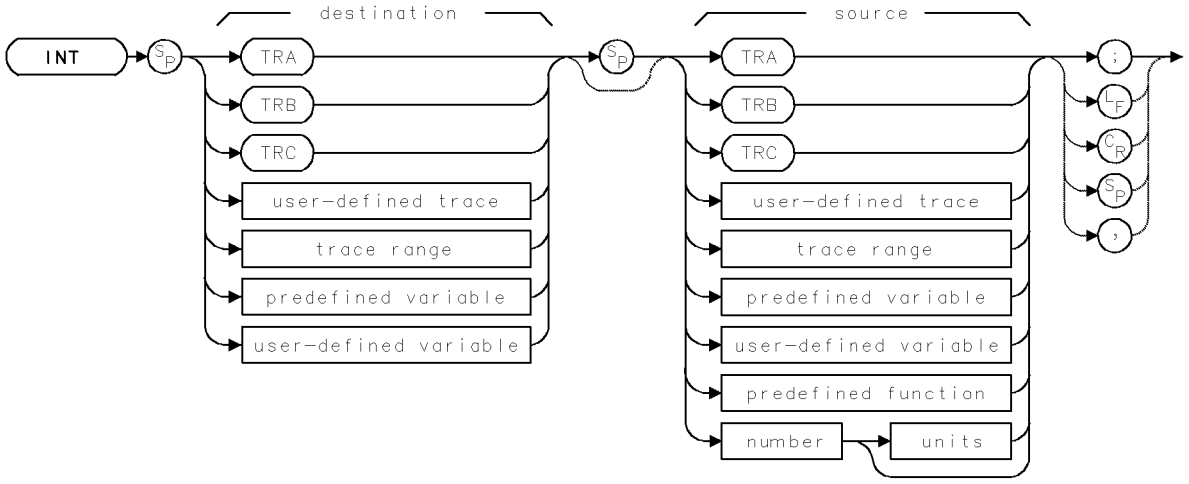


| Item | Description |
|---|---|
| Source or Destination Amplitude Range | 0 – 10,000 measurement units for linear trace data in *TRA*, *TRB*, *TRC*, *trace range*, or *user-defined trace*. –32,768 – +32,767 measurement units for logarithmic trace data in *TRA*, *TRB*, *TRC*, *trace range*, or *user-defined trace*. $\pm$ 1.8 $\times$ $10^{308}$ when using *number*, *predefined variable*, or *user-defined variable*. |
| Source-Length Range | 1 – 1024 position units. Default is 800 position units when using *TRA*, *TRB*, *TRC*. Truncated if longer than destination length. If shorter than destination length, last element is extended for operation. |
| Destination-Length Range | 1 – 1024 position units. |
| Requirements | Be sure data reflects one complete sweep when using *TRA*, *TRB*, *TRC*, or *trace range* for source. SNGLS and TS suggested. TRDEF required when using *user-defined trace*. VARDEF required when using *user-defined variable*. |

## Example

Obtain the integer value of a number.

```
130 OUTPUT 718;"ST 2.5S;TS;"      Set sweep time. Sweep.
140 OUTPUT 718;"INT ST,ST;"       Reset the sweep time using the integer value of the
                                  previous sweep time.
150 OUTPUT 718;"TS;"              Sweep with the new sweep time.
```

The INT command calculates the largest integer which is less than or equal to the value of the source, then stores the integer in the destination. The MOV and INT commands are the same for trace data, since trace data is in integer form (measurement units) already.

# INZ

INPUT IMPEDANCE

Specify value of input impedance *expected* at the input port.

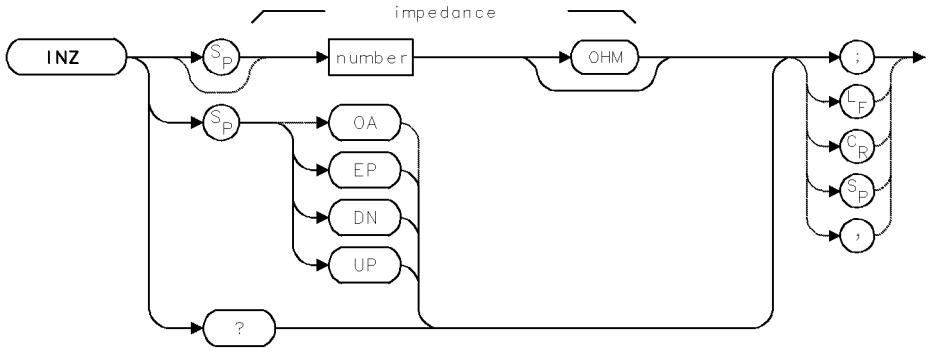


| Item | Description |
|---|---|
| Impedance Range | 1 to 100 MΩ |
| Step Increment | 1, 2, 5, 10 sequence |
| Interdependent Commands | Commands affecting amplitude, such as RL, ML, MIL, MEASURE |
| Preset State | INPUT 50 |

## Example

Use INZ to change the expected input impedance to 75 ohms for cable TV applications.

```
140 OUTPUT 718;"INZ 75;"     Change input impedance to 75 ohms.
```

The INZ command specifies the value of input impedance expected at the active input port. The input impedance is assumed to be 50 ohms unless specified otherwise with the INZ command. When INZ specifies a new value, all amplitude information is changed to reflect the new impedance. This includes the values of amplitude readouts, trace arrays, and returned amplitude data.

The actual impedance at the input can be changed with external hardware only.

## Query Response

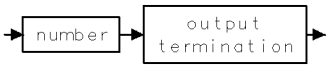

# IP

INSTRUMENT PRESET

Set all functions to their preset state.

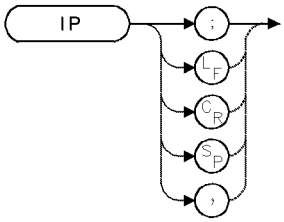


## Example

Preset the spectrum analyzer.

```
10 OUTPUT 718;"IP;"
```

The IP command presets the analyzer settings. Use IP to place the spectrum analyzer in a known state.

Table 2-10 shows the command functions that are executed or turned off by the instrument preset command, IP.

**Table 2-10.**
**Programming Commands Executed or Affected by Instrument Preset**

| Command | Preset State/Response |
|---|---|
| ACTPARM | OFF |
| ADC | Depends on PADC |
| AMB | AMB OFF |
| AMBPL | AMBPL OFF |
| AMC | AMC OFF |
| AMPCOR | AMPCOR OFF |
| ANNOFF | Annotation is reenabled after IP. |
| ANNOT | ANNOT ON |
| APB | APB OFF |
| ASWP | ASWP OFF |
| AT | AT −10DBM |
| AUNITS | AUNITS AUTO |
| BLANK | BLANK TRB;BLANK TRC; |
| BLANKFT | Depends on PINPUT (ON for optical input; OFF for others) |
| CAL | Interrupted |
| CALCOR | CALCOR ALL |
| CALFREQ | Depends on PINPUT |
| CALPWR | Depends on PINPUT |
| CALSRC | Depends on PINPUT |
| CF | Set to center of measurement range. |
| CLRDSP | CLRDSP |
| CLRW | CLRW TRA |
| CNVLOSS | Depends on PINPUT |
| CONTS | CONTS |
| COUPLE | Hardware and PINPUT dependent |
| DEBUG | DEBUG OFF |
| DET | DET NRM |
| DL | DL 0 dBm; DL OFF |
| DSPLY | Blank displayed variable. |

**Table 2-10.**
**Programming Commands Executed or Affected by Instrument Preset (continued)**

| Command | Preset State/Response |
|---|---|
| DSPMODE | DSPMODE NORMAL |
| DWINDOW | DWINDOW OFF |
| ERR | Clear error register. |
| EXTIF | OFF |
| FA | Set to beginning of measurement range. |
| FALIMIT | OFF |
| FB | Set to end of measurement range. |
| FETCH | Interrupted |
| FLIMIT | FLIMIT ON |
| FOFFSET | FOFFSET 0HZ |
| FS | FS |
| GRAPH | Blank graphics trace. |
| GRAT | GRAT ON |
| GRID | Blank grid. |
| HD | HD |
| HNLOCK | HNLOCK 0 |
| IDCF | Clear identified signal frequency. |
| IDMODE | IDMODE SHIFT if hardware supports it. Otherwise, IDMODE IMAGE. |
| IDSTAT | IDSTAT 0 |
| INPUT | Determined by PINPUT. |
| INZ | INZ 500HM |
| IT | IT 0 |
| IWINDOW | IWINDOW 1000,1000 |
| LAMBDA | Depends on PINPUT |
| LIMIBEEP | LIMIBEEP OFF |
| LIMIEDIT | OFF |
| LIMIHALF | LIMIHALF UPPER |
| LIMIREL | LIMIREL OFF |
| LIMITEST | LIMITEST OFF |

**Table 2-10.**
**Programming Commands Executed or Affected by Instrument Preset (continued)**

| Command | Preset State/Response |
|---|---|
| LG | LG 10DB |
| LINES | LINES ON |
| LINET | LINET 0 |
| LN | Off |
| LOSTART | Set to lowest frequency allowed by hardware. |
| LOSTOP | Set to highest frequency allowed by hardware. |
| MBIAS | MBIAS 0A |
| MBMAX | Hardware dependent: MBMAX 0 when RF Section is active input (for example, 71200, HP 70905, HP 70904, 70906, 70600, or 70908). MBMAX 10MA when HP 70907 is active input. |
| MBMIN | Hardware dependent: MBMIN 0 when RF Section is active input (for example, HP 70905, HP 70904, 70906, 70600, or 70908). MBMIN −10MA when HP 70907 is active input. |
| MBRES | MBRES 10 |
| MDS | MDS W |
| MEASURE | MEASURE SA |
| MIL | MIL AUTO |
| MK | Blank graphics marker. |
| MKA | Change value. |
| MKACT | MKACT 0 |
| MKAL | MKAL 0 |
| MKAR | MKAR 0 |
| MKBW | MKBW OFF |
| MKF | Change value. |
| MKN | Change value. |
| MKNOISE | MKNOISE OFF |
| MKOFF | Blank markers. |
| MKP | MKP 401, or center of trace |
| MKPAUSE | MKPAUSE 0 |
| MKPX | MXPX 6DB |

**Table 2-10.**
**Programming Commands Executed or Affected by Instrument Preset (continued)**

| Command | Preset State/Response |
|---|---|
| MKREAD | MKREAD AUTO |
| MKRELPWR | OFF |
| MKRINSYS | OFF |
| MKT | Change value. |
| MKTRACK | MKTRACK OFF |
| MKTV | MKTV 5DB |
| MKTYPE | MKTYPE NORMAL |
| ML | ML −10DBM |
| MSG | Blank message. |
| NSTART | NSTART 1 |
| NSTOP | NSTOP 40 |
| ONEOS | ONEOS OFF |
| ONMENU | OFF |
| ONMKR | OFF |
| ONUSER | OFF |
| ONWINDOW | OFF |
| OPTATN | AUTO |
| OPTMODE | OPTICAL |
| OR | OR 0,0 |
| OVRSWP | OVRSWP OFF |
| PA | PA 0,0 |
| PATHLOCK | PATHLOCK OFF |
| PAUSE | Interrupted |
| PEN | PEN 0 |
| PERSIST | PERSIST OFF |
| PREAMP | PREAMP OFF |
| PRSDAC | Set to midrange of DAC values. |
| PRSENABL | Hardware dependent: PRSENABL ON when HP 70600A preselector is active input. PRSENABL OFF when RF Section is active input (for example, HP 70904A RF section, HP 70905A/B RF section, HP 70906A/B RF section, or HP 70907A/B external millimeter interface module). For HP 70910A RF section, PRSENABL ON when its preselector is enabled, and PRSENABL OFF when its preselector is bypassed. |

**Table 2-10.**
**Programming Commands Executed or Affected by Instrument Preset (continued)**

| Command | Preset State/Response |
|---|---|
| PU | PU |
| PWRBARON | ON; depends on PINPUT. |
| PWRMODE | OPTICAL |
| RB | RB AUTO |
| RBR | RBR .01 |
| RL | RL −10DBM |
| RLPOS | RLPOS 10 |
| ROFFSET | ROFFSET 0 |
| RSPSVTY | AUTO |
| SCALE | SCALE 0,1000,0,1000 |
| SIGDEL | SIGDEL 12DB |
| SIGID | Interrupted |
| SNGLS | Off |
| SP | Set to maximum measurement range. |
| SRCALC | SRCALC NORM |
| SRCAM | SRCAM 0; SRCAM OFF. |
| SRCAMF | SRCAMF 1KHZ, or hardware limit |
| SRCAT | SRCAT AUTO |
| SRCBLNK | SRCBLNK ON |
| SRCMOD | SRCMOD INT |
| SRCOSC | SRCOSC EXT |
| SRCPOFS | SRCPOFS 0 |
| SRCPSTP | SRCPSTP AUTO (1 major graticule division) |
| SRCPSWP | SRCPSWP OFF |
| SRCPWR | SRCPWR OFF |
| SS | Set to SPAN/10 |
| ST | ST AUTO |
| SYSCOR | ON |

**Table 2-10.**
**Programming Commands Executed or Affected by Instrument Preset (continued)**

| Command | Preset State/Response |
|---|---|
| TDF | TDF P |
| TEXT | Blank text. |
| TH | TH −90DBM; TH OFF. |
| TITLE | Blank title. |
| TM | TM FREE |
| TP | TP 0 |
| TRCOND | Change Value |
| TRDEF | TRDEF TRA,800; TRDEF TRB,800; TRDEF TRC,800; |
| TRDSP | TRDSP TRA,ON |
| TRSTAT | Write, on |
| USRPWR | OFF |
| VAVG | VAVG 100; VAVG OFF |
| VB | VB AUTO |
| VBR | VBR 1 |
| VIEW | Off |
| VTH | VTH 3DB |
| VTL | VTL −100 DBM |
| VW | Blank item. |
| WAIT | Interrupted. |
| ZERO | AUTO |
| ZOOMRB | Interrupted. |

# IT

IDENTIFY ITEM

Assign a number to a series of graphics commands for future recall or modification.

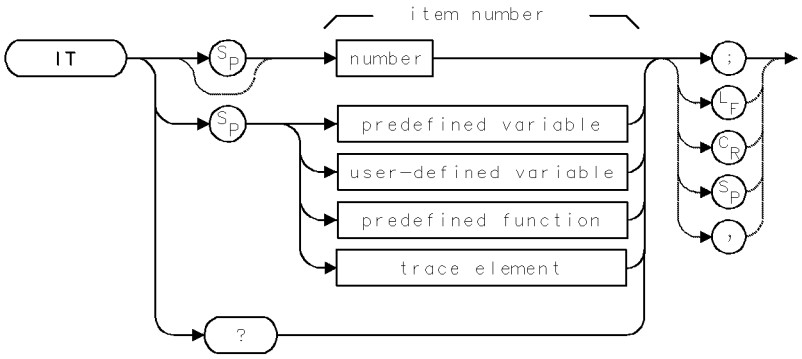


| Item | Description |
|---|---|
| Item-Number Range | 0 – 50, depending on model of display. |
| Interdependent Commands | CLRDSP, OR, SCALE, VW, TP, DELETE, PA, PR, PD, PU, GRAPH, GRID, TEXT, DSPLY, MK |
| Preset State | `IT 0` |

## Example

Use the item command, IT, to draw graphics on the analyzer display.

```
150 CLEAR 718                          Initialize analyzer.
160 OUTPUT 718;"IP;"
170 OUTPUT 718;"CLRDSP;"               Clear graphics from memory.
180 OUTPUT 718;"TRDSP TRA,OFF;"        Turn off trace A.
190 OUTPUT 718;"IT 1;VW OFF;"          Address item 1 and blank it. This way, item
                                       1 is not displayed while it is being created.
200 OUTPUT 718;"TEXT$This is ";        Define item 1 as text.
210 OUTPUT 718;"the contents of ";
220 OUTPUT 718;"item 1.$;"
230 OUTPUT 718;"IT 2;VW OFF;"          Address item 2 and blank it.
240 OUTPUT 718;"GRID 10,20,10,5;"      Define item 2 as a grid.
250 OUTPUT 718;"IT 1;OR 300,900;"      Address item 1 and move it to (300,900) in
                                       current scale units.
260 OUTPUT 718;"VW ON;"                Display item 1.
270 OUTPUT 718;"IT 2;OR 500,500;"      Address item 2 and move it to (500,500).
280 OUTPUT 718;"VW ON;"                Display item 2.
290 OUTPUT 718;"WAIT 2;"               Wait 2 seconds.
300 OUTPUT 718;"IT 1;DELETE;"          Delete item 1 from memory.
```

The IT command activates the reference-graphics mode by assigning a nonzero number to a series of graphics commands that form a shape. These shapes are called items. Use IT to blank, redraw, reshape, or reposition items. Graphics drawn when the reference-graphics mode is off cannot be modified at a later time. Execute `IT 0` to turn the mode off.

Manipulate an item by first activating it with IT, then modify it with the following commands:

**Table 2-11. Commands that Modify Graphics Items**

| Command | Function |
|---|---|
| VW OFF (view item off) | Blank item |
| VW ON (view item on) | Redraw item |
| OR (origin) | Offset item position |
| TP (pointer) | Change item shape |
| DELETE | Delete item from memory |

When assigned a non zero number, items are stored in memory for future display and manipulation. Execute `CLRDSP` to clear items from memory. (DISPOSE does not clear **item**s from memory.)

In addition to point-by-point drawing, items can be used to display text, grids, markers, or trace information. The commands associated with these tasks are divided into groups listed in the following table.

**Table 2-12.**
**Commands that can be Assigned to Items with the IT command.**

| Task | Description |
|---|---|
| Plot absolute, point-by-point drawing | PA, PD, PU |
| Plot-relative, point-by-point drawing | PR, PD, PU |
| Display trace data | GRAPH |
| Draw grid | GRID |
| Display text | TEXT,DSPLY |
| Display graphics marker | MK |

A single item can be assigned to do only one task. For example, a single item cannot draw a box and display text. In this case, two items are required, one for the box and another for the text.

Mixing item types generates a display error indicated by "E" in the display status box. For example, `IT 1; PA 0,0,100,100;MK 100,100;` generates an error in the display. See "Creating Graphics" in the Programming Fundamentals chapter for more information about items.

## Query Response

# IWINDOW

INSTRUMENT WINDOW

Change size – but not scale – of displayed measurement results.

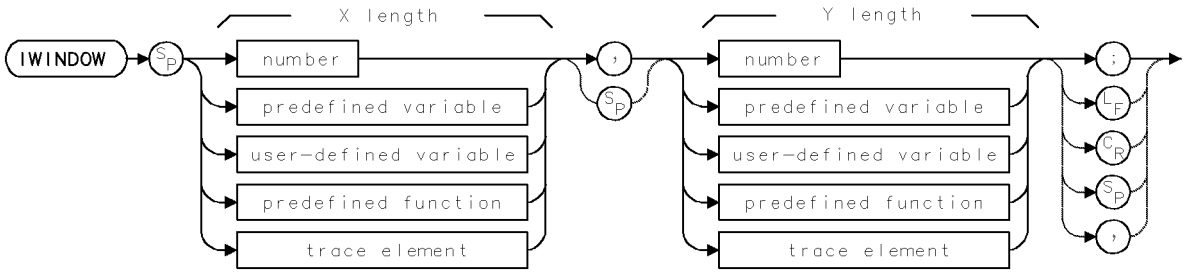


| Item | Description |
|---|---|
| X-Length Range | –32,768 – 32,767, in units set by SCALE command. |
| Y-Length Range | –32,768 – 32,767, in units set by SCALE command. |
| Interdependent Commands | SCALE, CLRDSP, OP |
| Preset State | IWINDOW 1000,1000 |

## Example

Change size of displayed measurement results.

```
90 CLEAR 718                          Initialize analyzer.
100 OUTPUT 718;"IP;"
110 OUTPUT 718;"CLRDSP;"              Clear graphics from memory.
120 OUTPUT 718;"IWINDOW 700,800;"     Define instrument window to be a 700 X 800 di-
                                      mension in current scale units. Notice annota-
                                      tion disappears when there is not enough room
                                      to display it.
```

The IWINDOW command varies the size of the graticule and measurement results on the analyzer display. Size is specified in the current scale units (SCALE). The new graticule is called an **instrument window**.

# KEYCLR

CLEAR USER-DEFINED KEYS

Blank keys currently accessed with (USER) key.

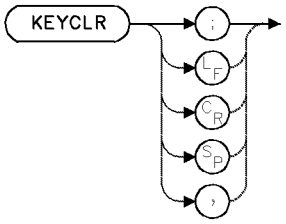


## Example

Blank the (USER) menu.

```
10 OUTPUT 718;"FUNCDEF JIMMY,^";        Create user-defined function called JIMMY.
20 OUTPUT 718;"CF 300MHZ;";
30 OUTPUT 718;"SP 1MHZ^;"
40 OUTPUT 718;"KEYDEF 7,JIMMY,%TEST;%"  Define key, called TEST.
50 PAUSE                                Press the (LOCAL) and (USER) keys on the
                                        analyzer to view JIMMY function, then
                                        press CONTINUE on the computer.
60 OUTPUT 718;"WAIT 2;"                 Wait 2 seconds.
70 OUTPUT 718;"KEYCLR;"                 Blank the (USER) menu. Press (LOCAL) and
                                        (USER) on the analyzer once again. Notice
                                        that the (USER) menu is blank.
```

The KEYCLR command blanks the (USER) menu. See KEYDEF, RCLU, READMENU, and KEYPST.

# KEYDEF

DEFINE USER-DEFINED KEY

Assign a label and **user-defined function** to a (USER) key.

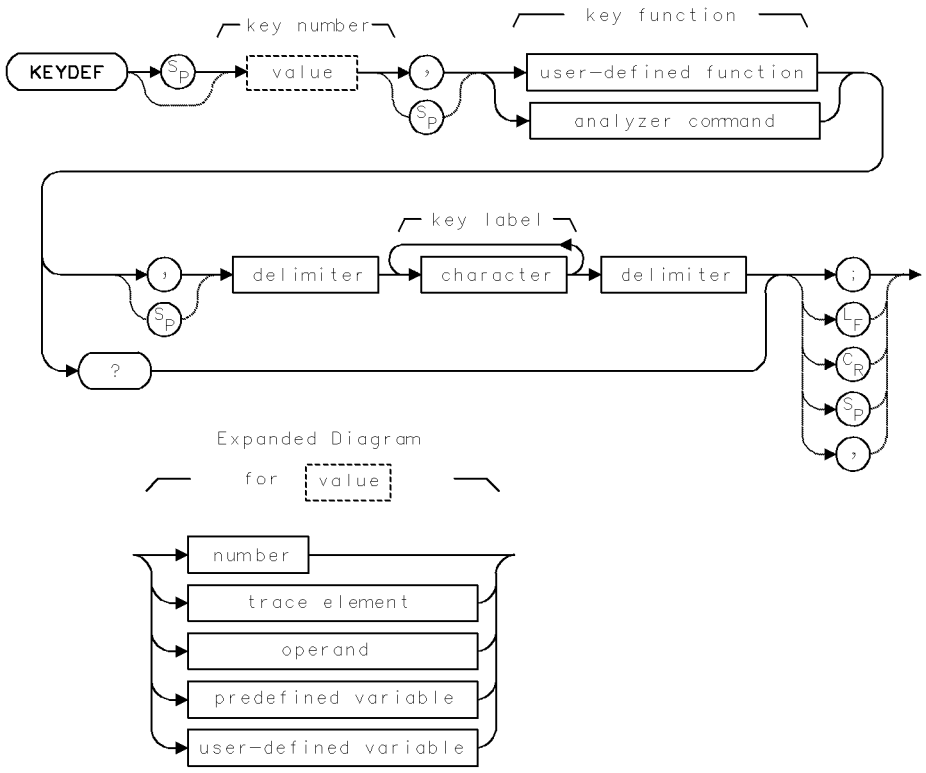


| Item | Description |
|---|---|
| Requirements | Requires stored user-defined function. (See FUNCDEF or ACTDEF.) VARDEF required when using *user-defined variable*. |
| Interdependent Commands | KEYPST, PROTECT |
| Key-Number Range (softkeys) | 1 – 14 |
| Key-Number Range (keypad) | 15 – 29 |
| Key-Label Range | 2 lines of up to 7 characters each. |

## Example

Create a front panel key that executes a user-defined function.

```
10 OUTPUT 718;"FUNCDEF T_10,^";          Create user-defined function called T_10.
20 OUTPUT 718;"CF 300MHZ;";
30 OUTPUT 718;"SP 1MHZ^;"
40 OUTPUT 718;"KEYDEF 7,T_10,%TEST%;"    Define key, labeled TEST.
```

The KEYDEF command creates a key that executes a user-defined function. The key can be a softkey that is located in the (USER) menu, or it can be a key that is located on an *undefined* custom keypad. The keys on the normal recognized keypad cannot be redefined. Once a key is defined, the user-defined function is executed whenever the key is pressed.

---

**Error 2013** Error 2013 is displayed if a user-defined function is called in a KEYDEF before the function is defined and stored.

---

Up to 14 user-defined softkeys can be displayed at one time. They are all accessed with the (USER) key. The softkeys are numbered from 1 to 14. The following figure shows the correspondence between softkey number and softkey location. The softkey label can be up to 14 characters long, but if longer than 7, the characters are divided into 2 lines of up to 7 characters each. Additional characters can be incorporated into the label for control codes. For example, a line feed may be used to specify which character begins the second line of the label. Use the READMENU command as another way to build menus of keys. Use the PROTECT command to prevent inadvertent erasure or redefinition. KEYPST protects key #8 automatically. Use PROTECT to turn off the protection.

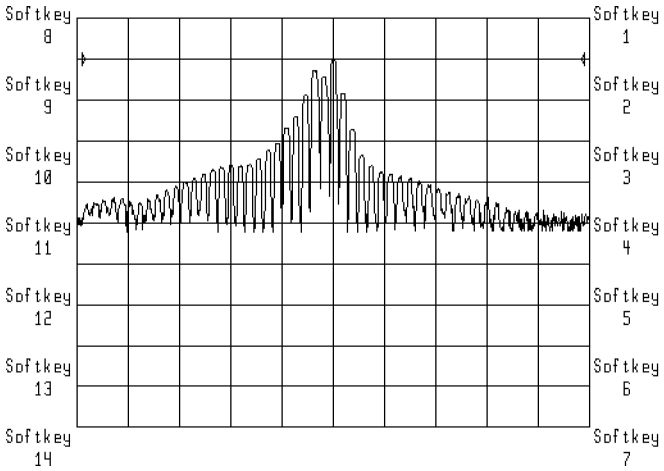


**Key Numbers for Softkeys**

A key on the custom keypad can only be assigned to a user-defined function if the keypad is unrecognized by the display. If you attempt to redefine the keys of a recognized keypanel, the built-in definitions for the keypanel will still be used. There are 15 possible keypad keys labeled 15.through 29. The following figure shows the numbering of the keypad keys. There is no label annotation for USER keys 15 through 29. Labels may be defined, but they will never be displayed.

**Assigned Key Numbers for Custom Keypad**
**(As viewed from the front of keypad.)**

| | | | | |
|---|---|---|---|---|
| 15 | 18 | 21 | 24 | 27 |
| 16 | 19 | 22 | 25 | 28 |
| 17 | 20 | 23 | 26 | 29 |

## Define All Valid Key Presses

If you're building key definitions for a custom keypad, be sure to define all of the keypad positions which could be pressed by a key. For example, if a single key will be over both positions 15 and 18, both of these keypad positions should be defined to be the same function.

## Query Response

Returns the name of the user-defined function assigned to the key.

# KEYPST

PRESET USER-DEFINED KEYS

Set (USER) keys to a default state.

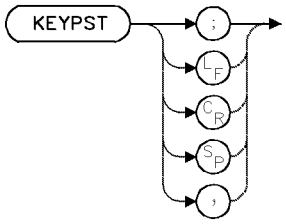


| Item | Description |
|---|---|
| Interdependent Commands | PROTECT |

## Example

Preset (USER) keys.

```
10 OUTPUT 718;"KEYCLR;"                    ! Clear (USER) keys.
20 OUTPUT 718;"FUNCDEF VOID,$$;";          ! Define user-defined function, called VOID,
                                           ! that executes null function.
30 OUTPUT 718;"KEYDEF 7,VOID,$NULL$;";     ! Define user-defined key that executes the
                                           ! null function.  Observe NULL key in
                                           ! lower right corner of display.
40 LOCAL 718                               ! Activate front panel controls.
50 WAIT 2
60 OUTPUT 718;"KEYPST;";                   ! Reset user-defined keys to their preset
                                           ! values.  Push (LOCAL) to view the (USER)
                                           ! keys.
```

The KEYPST command resets the menu of keys that is accessed with the (USER) key to contain these three keys only:

- `DEFINE USR KEY` - Define user-defined key.
- `SAVE USER` - Save menu of (USER) keys.
- `RECALL USER` - Recall menu of (USER) keys.

Executing `KEYPST` protects key #8, DEFINE USR KEY, automatically. Use PROTECT to turn off the protection.

See KEYDEF and KEYCLR.

# KS~

KS 126

Output every Nth value (HP 8566B spectrum analyzer compatibility).

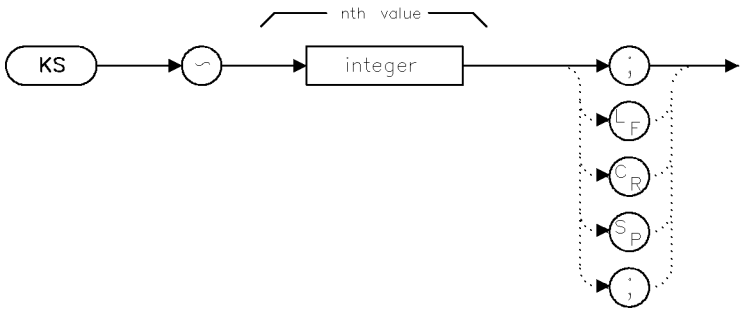


ks

| Item | Description |
|---|---|
| Range | [0,1022] |
| Inter-Dependent Commands | DA |

## Example

KS~ 100; Output every 100th point.

This commands is for remote programming compatibility with the HP 8566B spectrum analyzer. (KS~ is also referred to as KS126.) Refer the the HP 8566B spectrum analyzer manuals for further information and for examples.

A sweep into the desired trace should not be active if KS~ is to be used.

Attempting to use KS~ for a DA that does not correspond to an HP 8566B spectrum analyzer trace data address will result in an “Illegal operation” error. If enough memory does not exist to create a temporary sampling trace, a “Memory Overflow” error will occur.

# LAMBDA

OPERATING WAVELENGTH

Select the lightwave input path wavelength.

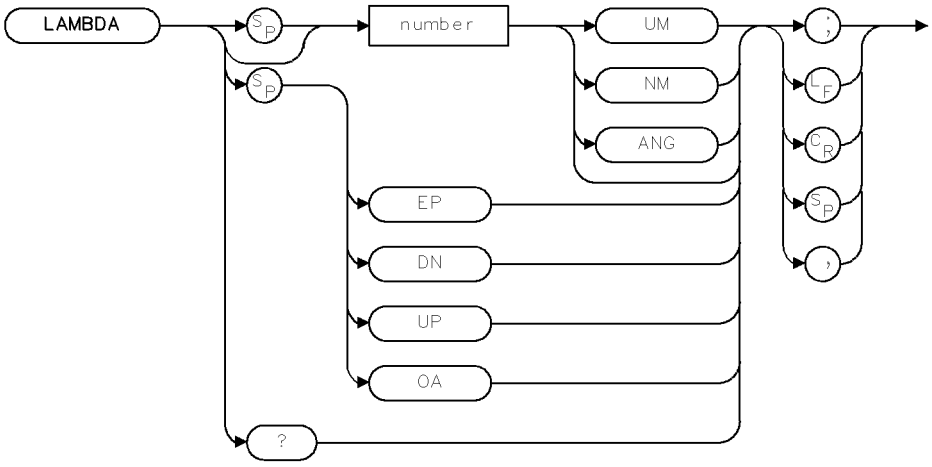


| Item | Description |
|---|---|
| Restrictions | Requires lightwave module. |
| Range | 0 - 0.001 |

## Example

```
10 OUTPUT 718;"LAMBDA 1550NM;"
20 OUTPUT 718;"LAMBDA?"
```

The LAMBDA command selects the wavelength in systems with multiple lightwave input paths. LAMBDA applies factory-determined corrections for the selected operating wavelength. The selected wavelength is adjusted to the nearest wavelength for which there are factory-determined corrections.

## Query Response

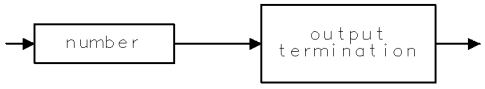

# LG

LOGARITHMIC SCALE

Set vertical scale of measurement results in logarithmic terms.

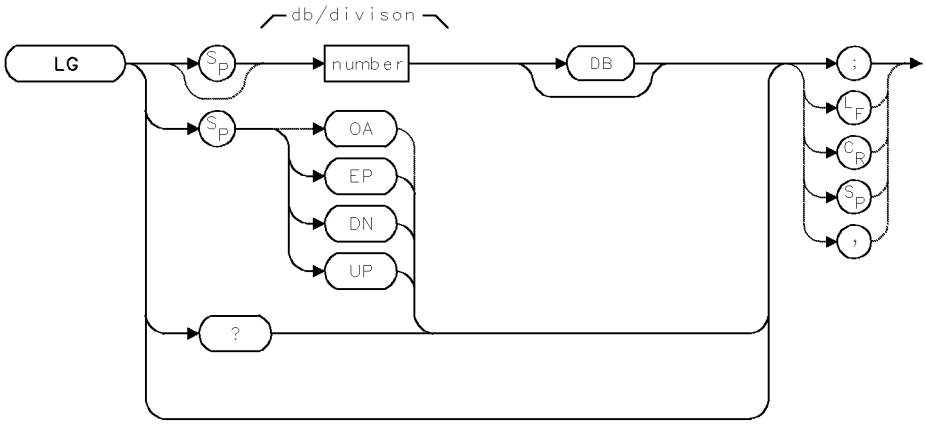


| Item | Description |
|---|---|
| Scale Range | 0.01 dB – 20 dB |
| Step Increment | 1,2,5,10 sequence |
| Requirements | If previous sweeps (measurements) were made during linear mode, update trace data to reflect logarithmic scale. |
| Preset State | `LG 10DB` |

## Example

Change log scale.

```
20 CLEAR 718                 Initialize analyzer
30 OUTPUT 718;"IP;"
40 OUTPUT 718;"LG 20DB;"     Set the log scale to 20 dB/division.
50 OUTPUT 718;"LG EP;"       Change the log scale with the front panel keys.  Enter a
                             number, then press ACCEPT VALUE
```

The LG command specifies the vertical graticule divisions as logarithmic units without changing the reference level. This is called the logarithmic display mode. If no value is specified, the logarithmic scale is 10 dB per division. See LN.

## Query Response

# LIMIAMP

LIMIT LINE: AMPLITUDE

Set the limit-line segment amplitude.

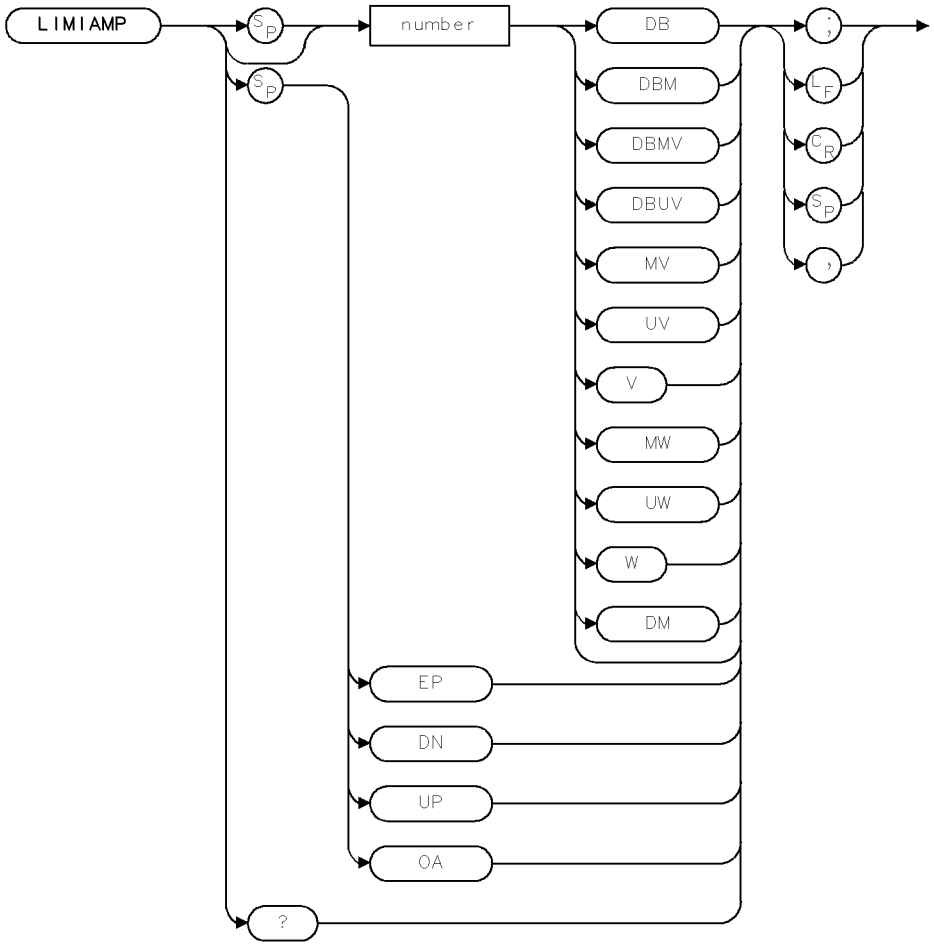


| Item | Description |
|---|---|
| Interdependent Commands | LIMIBOT, LIMIDEL, LIMIDONE, LIMIEDIT, LIMIHALF, LIMILINE, LIMINEXT, LIMIRCL, LIMISCRL, LIMISDEL, LIMISEG, LIMISEL |

## Example

```
10 OUTPUT 718;"LIMIAMP -10DBM;"
```

The LIMIAMP command sets the amplitude of the currently active limit-line segment. The query returns the amplitude value of the current segment.

See LIMILINE for more information.

## Query Response

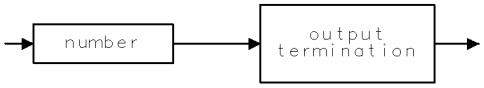


QNUM

# LIMIBEEP

LIMIT LINE: BEEP

Sound beep each time currently measured trace data exceeds test limits.

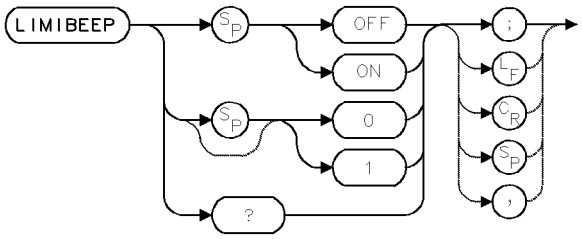


| Item | Description |
|---|---|
| Interdependent Commands | LIMIAMP, LIMIDEL, LIMIFREQ, LIMILINE, LIMIRCL, LIMIREL, LIMISDEL, LIMISEG, LIMITEST, LIMITYPE, and any commands that change trace data values. |
| Preset State | `LIMIBEEP OFF` |

The LIMIBEEP command sounds a beep when trace data exceeds limit-line parameters during limit-line testing. See LIMILINE and LIMITEST for a description of limit lines and limit-line testing, and see LIMIFAIL for an alternative failure indicator. The beep occurs once per sweep at the first failure point.

`LIMIBEEP ON` sounds a beep when a signal response fails the test limit as the sweep progresses. The beep is sounded once per sweep at the first failure point.

`LIMIBEEP OFF` turns off the function.

## Query Response

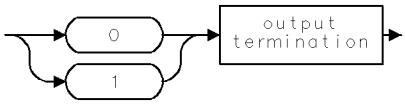

# LIMIBOT

SELECT BOTTOM LINE SEGMENT

Activate the last segment of the limit-line table.

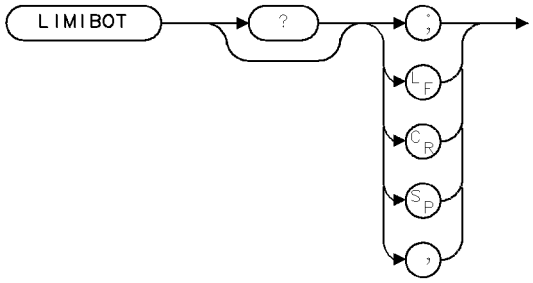


XLBOT

| Item | Description |
|---|---|
| Interdependent Commands | LIMIDEL, LIMIDONE, LIMIEDIT, LIMILINE, LIMIRCL, LIMISDEL, LIMISEG |

## Example

```
10 OUTPUT 718;"LIMIBOT;"
```

The LIMIBOT command specifies that the last segment of the limit line become the active segment. The query returns the number of the last segment.

See LIMILINE for more information.

## Query Response

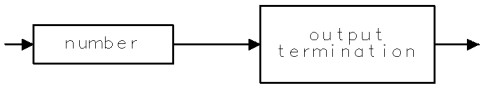


QNUM

# LIMIDEL

LIMIT LINE: DELETE

Erase contents of limit-line table.

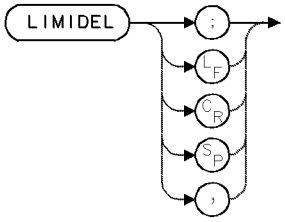


LIMIDEL erases the contents of the limit-line table.

When testing with limit-line parameters that reside in traces, execution of LIMIDEL is required before storing these limit-line parameters in the LIMIT_LO and LIMIT_HI trace arrays. See LIMILINE and LIMITEST for descriptions of limit lines and limit-line testing.

# LIMIDONE

LIMIT LINE: EDITING DONE

Turn off the limit-line editor.

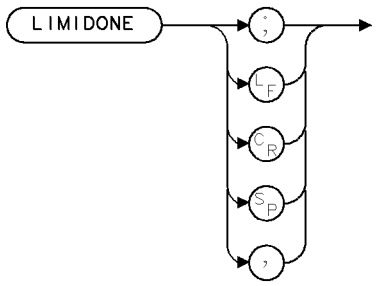


XLDONE

## Example

```
10 OUTPUT 718;"LIMIDONE;"
```

The LIMIDONE command turns off the limit-line editor which removes the limit-line table and editing softkeys from the display.

# LIMIEDIT

LIMIT LINE: EDITOR

Turn on the limit-line editor.

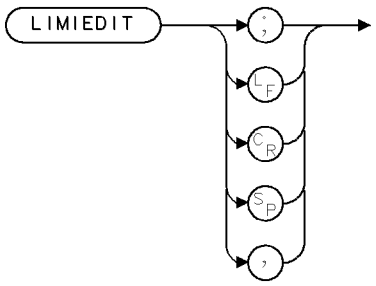


XLEDIT

## Example

```
10 OUTPUT 718;"LIMIEDIT;"
```

The LIMIEDIT command turns on the limit-line editor.

# LIMIFAIL

LIMIT LINE: FAIL

Return limit-line test results.

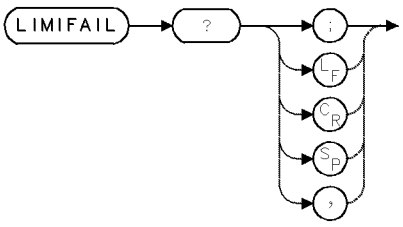


| Item | Description |
|---|---|
| Requirements | Execute `LIMITEST ON` before executing LIMIFAIL. |
| Interdependent Commands | LIMIAMP, LIMIDEL, LIMIFREQ, LIMILINE, LIMIRCL, LIMIREL, LIMISDEL, LIMISEG, LIMITEST, LIMITYPE, and any commands affecting trace data. |

The LIMIFAIL command returns numbers that tell whether trace data exceeds limit-line parameters.

- A “1” is returned the instant trace data falls below the lower limit line. Thus, during long sweep times, the “1” may be returned before the end of the sweep.
- A “2” is returned the instant trace data exceeds the upper limit line. Thus, during long sweep times, the “2” may be returned before the end of the sweep.
- A “3” is returned if both upper and lower limits have been exceeded.
- A “0” is returned after one complete sweep of trace data has been compared to and does not exceed the limit-line parameters. LIMIFAIL continues to return “0” until a signal response in a subsequent sweep exceeds the limit line.

See the LIMIBEEP command for an alternate failure indicator. See also LIMILINE and LIMITEST for descriptions of limit lines and limit-line testing.

## Query Response

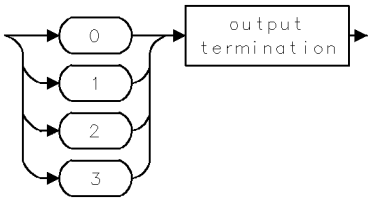

# LIMIFREQ

LIMIT LINE: FREQUENCY

Set the limit-line segment frequency.

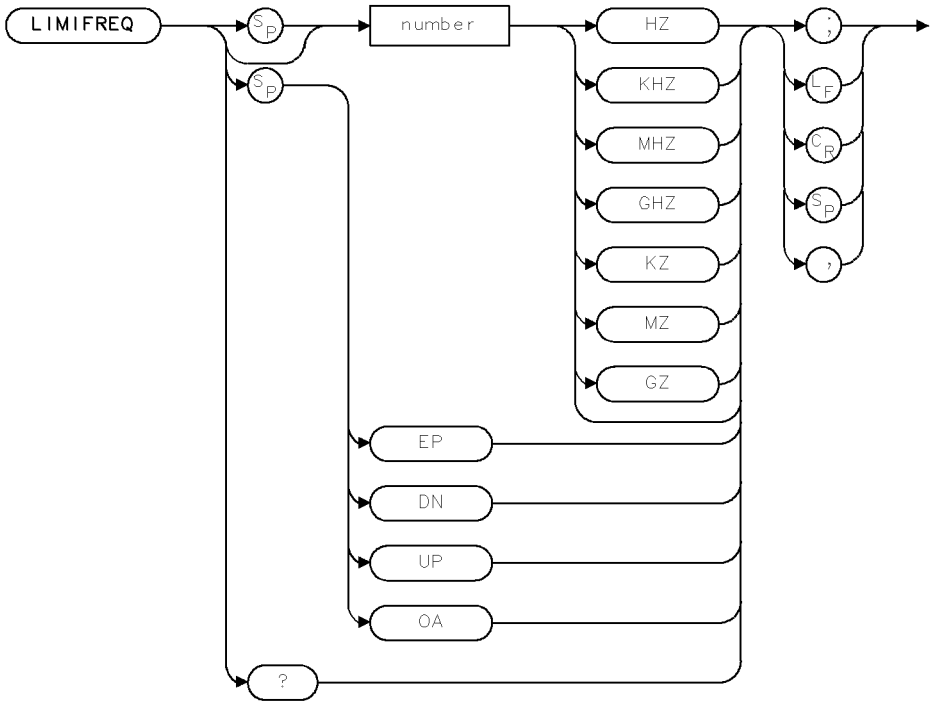


| Item | Description |
|---|---|
| Range | dependent on hardware |
| Interdependent Commands | LIMIBOT, LIMIDEL, LIMIDONE, LIMIEDIT, LIMIHALF, LIMILINE, LIMINEXT, LIMIRCL, LIMISCRL, LIMISDEL, LIMISEG, LIMISEL |

## Example

```
10 OUTPUT 718;"LIMIFREQ 2GHZ;"
```

The LIMIFREQ command sets the frequency of the currently active limit-line segment. The query returns the frequency of the current segment.

See LIMILINE for more information.

## Query Response

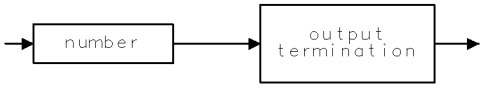


QNUM

# LIMIHALF

LIMIT LINE: HALF

Select upper or lower **limit line** for modification or creation.

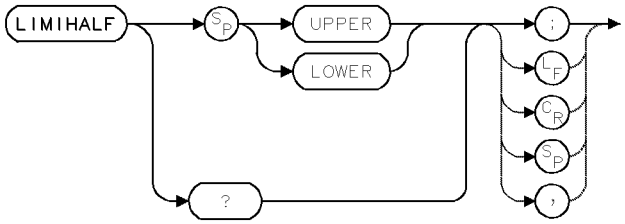


| Item | Description |
|---|---|
| Preset State | LIMIHALF UPPER |

The LIMIHALF command selects for modification either the upper or lower limit line in the limit-line table. The LIMIHALF command works in conjunction with the following commands to define a limit line stored in the limit-line table:

1. LIMILINE clears the limit-line table, prepares it for data entry, and specifies the number of segments in a limit line.
2. LIMISEG defines the amplitude and frequency values of each of the limit-line segments.
3. LIMIREL determines whether the values of the limit line are absolute or are relative to the center-frequency and reference-level settings.

See the LIMILINE command for a description of limit lines.

## Query Response

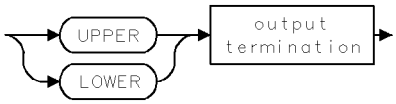

# LIMILINE

LIMIT LINE

Return the current limit-line parameters for future recall or build a new limit line.

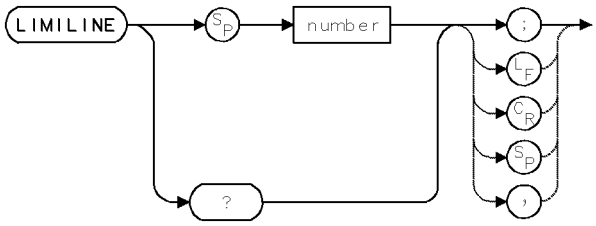


| Item | Description |
|---|---|
| Range | 400 segments, depending on available memory |
| Requirements | Requires internal memory. See Appendix D for commands that consume memory. |

The LIMILINE command initiates the process that loads new **limit line**s into the **limit-line table**. When creating a limit line, following LIMILINE with a number clears the limit-line table, prepares it for data entry, and specifies the number of segments in the limit line. Thus, the expression `LIMILINE 20` clears the limit-line table and allocates memory space for a 20-segment limit line.

A limit line is a test limit consisting of a series of line segments positioned according to frequency and amplitude in the spectrum analyzer measurement range. Two limit lines can be defined, one for the upper limit, another for the lower limit. Once defined, trace data can be compared to the limit lines as the spectrum analyzer sweeps. When the trace data exceeds the upper or lower limits, the spectrum analyzer beeps or returns test results to the computer (see LIMIBEEP and LIMIFAIL).

Limit lines can be stored in a table or in a trace. Use these commands in the order given to build a limit-line for storing in the limit-line table.

1. LIMILINE clears the limit-line table, prepares it for data entry, and specifies the number of segments in a limit line.
2. LIMIHALF specifies whether the limit line is an upper or lower limit-line.
3. LIMISEG defines the amplitude and frequency characteristics of each of the limit-line segments.
4. LIMIREL determines whether the values of the limit line are absolute values or positioned relative to the reference-level and center-frequency settings.

The contents of the limit-line table can be stored in a file with the LIMISAV or STOR command.

When the LIMILINE command is executed, the user-defined trace arrays, called LIMIT_LO and LIMIT_HI, are stored in internal memory. These arrays each contain a trace that reflects the contents of the limit-line table.

Execute `LIMILINE?` to return the contents of the limit-line table to a computer.

See LIMITEST for more information.

## Query Response

The query response is a character string consisting of LIMILINE, LIMIREL, LIMIHALF, and LIMISEG commands, which restore the limit-line table. The response is terminated with line-feed (ASCII 10).

# LIMINEXT

NEXT LIMIT LINE SEGMENT

Activate the next limit-line segment.

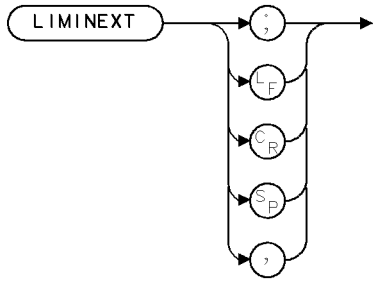


XLNEXT

| Item | Description |
|---|---|
| Interdependent Commands | LIMIBOT, LIMIDEL, LIMIDONE, LIMIEDIT, LIMIHALF, LIMILINE, LIMINEXT, LIMIRCL, LIMISCRL, LIMISDEL, LIMISEG, LIMISEL |

The LIMINEXT command moves the active position from the current limit line segment to the next limit line segment. If the segment prior to executing this command was the last segment, the first segment will become active.

# LIMIRCL

LIMIT LINE: RECALL

Load stored limit line into limit-line table.

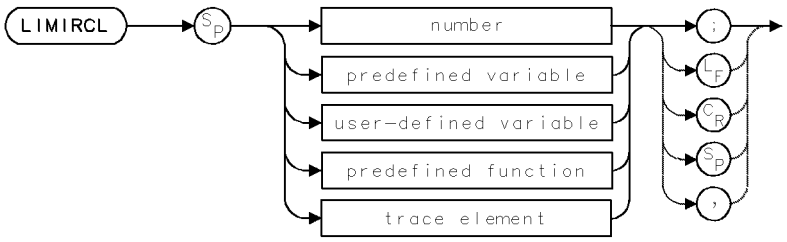


| Item | Description |
|---|---|
| Range | 0 – 9999 |
| Requirements | To select storage location (HP-IB device, HP-MSIB device, or internal memory), execute MSI before executing LIMIRCL. Internal memory is the storage device when power is applied to the spectrum analyzer.) |

The LIMIRCL command recalls limit lines that have been stored previously by the LIMISAV command. LIMISAV specifies a limit-line file number. For example, `LIMISAV 2` stores a limit line in file 2. Execute `LIMIRCL 2` to recall the limit line.

When files are stored in user memory, limit-line entries appear in the user memory catalog as "l_*N*" where *N* is the number of the register and "l" indicates the file contains limit lines. For example, the entry for `LIMISAV 2` is listed in the catalog as "l_2" unless the PREFX command has been used to alter the "l" prefix.

Press `State`, recall, `catalog` to view the catalog of user memory.

See LIMILINE and LIMITEST for descriptions of limit lines and limit-line testing.

# LIMIREL

LIMIT LINE: RELATIVE

Determine whether limit line values are absolute or relative.

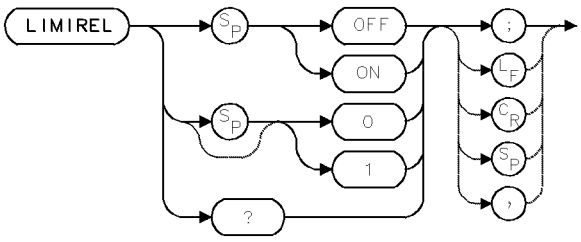


| Item | Description |
|---|---|
| Preset State | LIMIREL OFF |

The LIMIREL command determines whether the frequency and amplitude parameters in the limit-line table represent absolute values or relative values referenced to the reference-level and center frequency settings.

Executing LIMIREL OFF specifies limit-line table parameters as absolute values, and positions the limit line accordingly.

Executing LIMIREL ON specifies limit-line table parameters as relative values, positioning the limit line relative to the reference-level and center-frequency settings.

The LIMIREL command does not affect limit-line testing with limit lines stored in trace arrays. For descriptions of limit lines and limit-line testing, see LIMILINE and LIMITEST.

## Query Response

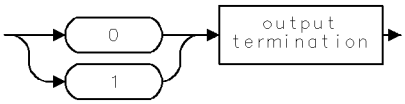

# LIMISAV

LIMIT LINE: SAVE

Save contents of limit-line table in limit-line file for future recall.

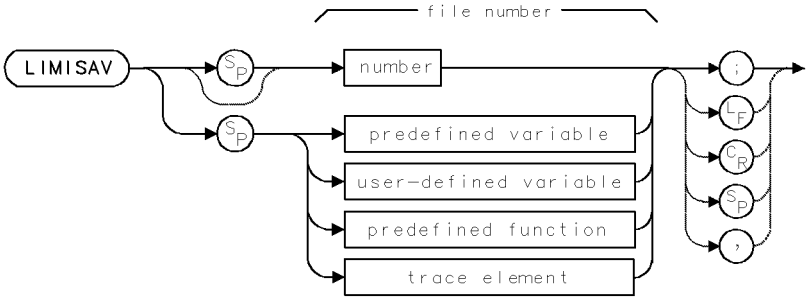


| Item | Description |
|---|---|
| Range | 0 – 9999 |
| Requirements | To select storage location (HP-IB device, HP-MSIB device, or internal memory), execute MSI before executing LIMISAV. Internal memory is the storage device when power is applied to the spectrum analyzer. Requires memory, depending on MSI selection. See Appendix D for commands that consume memory. |

The LIMISAV command saves in user memory the contents of the limit-line table only. LIMISAV does not save limit lines that are present in the LIMIT_HI or LIMIT_LO trace array. (LIMIT_HI and LIMIT_LO are described under the LIMITEST command.)

LIMISAV specifies a register number. For example, `LIMISAV 2` stores a limit line in register 2. Execute `LIMIRCL 2` to recall the limit line.

Files are saved in user memory unless specified otherwise by the MSI command. When stored in user memory, limit-lines entries appear in the user-memory catalog as "l_*N*", where *N* is the number of the register and "l" indicates the file contains limit lines. For example, the entry for `LIMISAV 2` is listed in the catalog as "l_2".

Press (State), recall, `catalog & MSI` to view the catalog of user memory. Use the PREFX command to change the letters of the "l" prefix.

# LIMISCRL

SCROLL LIMIT LINE SEGMENTS

Scroll the active limit-line segment from the current active segment.

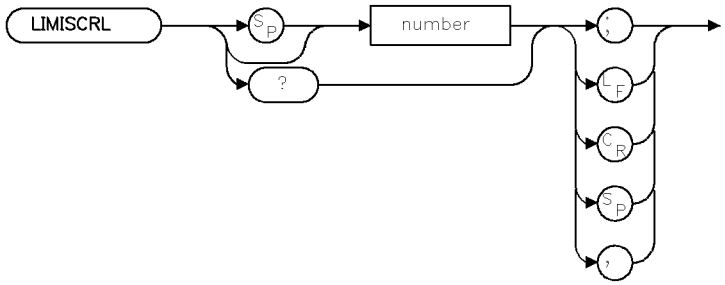


XLSCRL

| Item | Description |
|---|---|
| Interdependent Commands | LIMIBOT, LIMIDEL, LIMIDONE, LIMIEDIT, LIMIHALF, LIMILINE, LIMINEXT, LIMIRCL, LIMISCRL, LIMISDEL, LIMISEG, LIMISEL |

## Example

```
10 OUTPUT 718;"LIMISCRL 19;"
```

The LIMISCRL command scrolls the active limit-line segment from the current active segment. That is, the number entered indicates the new active segment position with reference from the currently active segment.

If the number entered is larger than the current number of segments, the count will wrap around to the first segment and continue counting from there. If the number is larger than the maximum number of segments, an error will be generated.

For example, if there are 20 segments in your limit-line table, only the first 10 segments can be displayed on-screen. However, using the LIMISCRL command and entering in number 19 will allow you to view segments 10 through 20. By using LIMISCRL in this manner, it tends to have a “scrolling” affect on the table in which different portions of the limit-line table can be viewed.

The query returns the currently active segment.

## Query Response

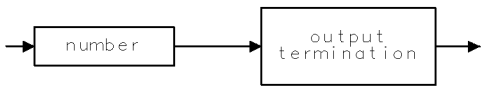


QNUM

# LIMISDEL

LIMIT LINE: SEGMENT DELETE

Delete the currently active limit-line segment.

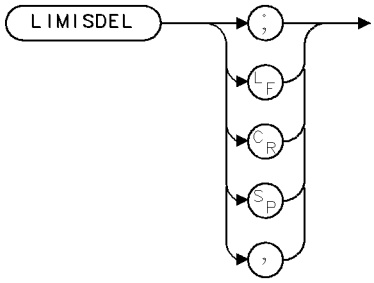


XLSDEL

| Item | Description |
|---|---|
| Interdependent Commands | LIMIBOT, LIMIDEL, LIMIDONE, LIMIEDIT, LIMIHALF, LIMILINE, LIMINEXT, LIMIRCL, LIMISCRL, LIMISDEL, LIMISEG, LIMISEL |

## Example

```
10 OUTPUT 718;"LIMISDEL;"
```

The LIMISDEL command deletes the currently active limit-line segment.

# LIMISEG

LIMIT LINE: SEGMENT

Define slope and offset of limit-line segments.

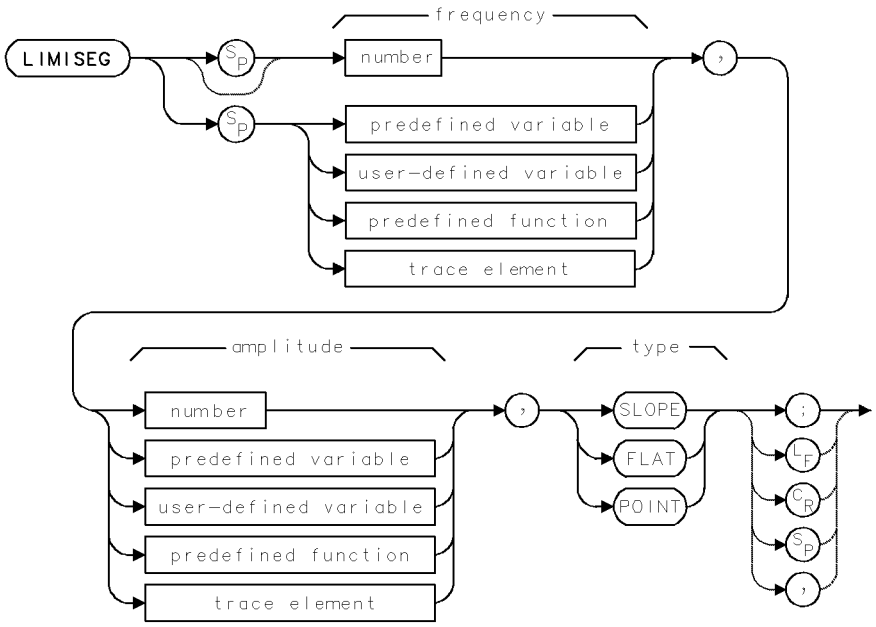


| Item | Description |
|---|---|
| Range | 400 segments, depending on memory. |
| Requirements | When creating new limit lines, execute LIMILINE, and LIMIHALF if necessary, before executing LIMISEG. |
| Interdependent Commands | LIMIDEL, LIMIHALF, LIMILINE, LIMIRCL, LIMISDEL |

The LIMISEG command specifies the characteristics of a limit line that is stored in the limit-line table. For descriptions of limit lines and limit-line testing, see LIMILINE and LIMITEST.

A limit line is divided into segments. LIMISEG defines the characteristics of each segment in terms of frequency, amplitude, and, in most cases, slope. The amplitude and frequency terms define the beginning point of a segment. The type parameter defines the rest of the segment. Three types are available:

- FLAT draws a zero-slope line between the beginning points of two segments, producing limit-line values equal in amplitude for all frequencies between the two points.
- SLOPE draws a sloped line between the beginning points of two segments, producing limit-line values for all frequencies between the two points.
- POINT specifies a limit value for the beginning point only.

If the segment type is omitted, the type of the previous segment is used. Limit-line segments can be added during limit-line testing.

The LIMISEG command works in conjunction with the following commands to define a limit line in the limit-line table:

**LIMISEG**

1. LIMILINE clears the limit-line table, prepares it for data entry, and specifies the number of segments in the limit line.
2. LIMIHALF specifies whether the limit-line is an upper or lower limit-line.
3. LIMIREL determines whether the values of the limit line are absolute or are relative to the center-frequency and reference level settings.

# LIMITEST

LIMIT LINE: TEST

Compare active trace data to limit-line parameters.

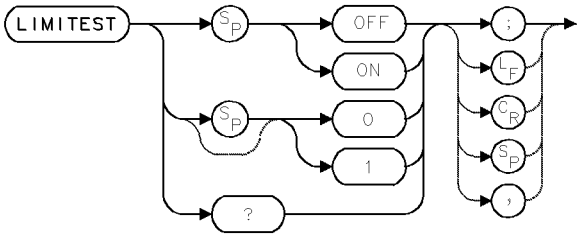


| Item | Description |
|---|---|
| Requirements | A limit line must exist before `LIMITEST ON` is executed. Execute `LIMIDEL` before executing `LIMITEST ON`, when testing limit lines stored in trace form. See description below. The spectrum analyzer must be sweeping to test active trace data. |
| Preset State | `LIMITEST OFF` |

The LIMITEST command compares data in the currently sweeping trace to a limit line. A limit line must be stored in a table or trace before testing begins. (For a description of limit lines, see LIMILINE.) When in table form, the frequency-amplitude characteristics reside in the **limit-line table**. To view the limit-line table, press `Misc`, MORE 1 of 3, `limit lines`. During measurements, the limit line characteristics are displayed graphically as a **limit line** when active-trace data is displayed. When in trace form, the frequency-amplitude characteristics reside in either of two trace arrays, called LIMIT_HI and LIMIT_LO, which are stored in user memory.

## Testing with Limit Lines Stored in the Limit-Line Table

First, load a limit line into the limit-line table. Use LIMIRCL to load a previously stored limit line or execute the following commands, in the order given, to create a limit line:

1. LIMILINE clears the limit-line table, prepares it for data entry, and specifies the number of segments in a limit line.
2. LIMIHALF specifies whether the limit line is an upper or lower limit-line.
3. LIMISEG defines the amplitude and frequency characteristics of each of the limit-line segments.
4. LIMIREL determines whether the values of the limit line are absolute or are positioned relative to the reference-level and center frequency settings.

Next, execute `LIMITEST ON` and sweep the measurement range. Executing `LIMITEST ON` automatically copies the contents of the limit-line table into the LIMIT_HI and LIMIT_LO trace arrays and compares active trace data to the line parameters.

When LIMIREL has been executed to make limit-line values relative, remember that changing the amplitude or frequency range during limit-line testing will change the limit-line parameters. During single-sweep mode, `LIMITEST ON` compares the limit line to trace A data only. Executing `LIMITEST OFF` erases the LIMIT_HI and LIMIT_LO trace arrays.

## Testing with Limit Lines Stored in Traces

First, use the LIMISAV command to store the contents of the limit-line table if needed for future use, then erase the contents of the limit-line table:

```
40 OUTPUT 718;"LIMIDEL;"
```

Next, use the TRDEF command to define a trace array called LIMIT_HI or LIMIT_LO. Store upper limits in LIMIT_HI and lower limits in LIMIT_LO. Below, LIMIT_HI is defined to contain 800 frequency amplitude pairs:

```
90 OUTPUT 718;"TRDEF LIMIT_HI,800;"
```

Next, store limit-line parameters in the trace array. Use the TRA, TRB, or TRC command to enter limit-line data point-by-point, or use swept trace data as a limit line, if desired. Below, limit-line parameters present in trace B are stored in LIMIT_HI. Note that the MOV command performs the transfer.

```
200 OUTPUT 718;"SNGLS;CLRW TRB;TS;MOV LIMIT_HI,TRB;"
```

Next, execute `LIMITEST ON` and sweep the measurement range. Executing `LIMITEST ON` compares trace data to the line parameters stored in the LIMIT_HI and LIMIT_LO arrays. As before, during single-sweep mode, `LIMITEST ON` compares the limit line to trace A data only. Executing `LIMITEST OFF` erases the LIMIT_HI and LIMIT_LO trace arrays.

Use the STOR command to save trace array contents in a file. Below, the LIMIT_HI trace array is stored as a trace file called “LIMIT.”

```
500 OUTPUT 718;"STOR T,$LIMIT$,LIMIT_HI;"
```

## Analyzer Test Results

The limit-line test fails when trace-data amplitude is greater than the upper test limit or less than the lower test limit. Use LIMIFAIL or LIMIBEEP to signal test-limit failures. Use the marker and math commands to analyze trace data. For example, executing `SUB TRB,TRB,LIMIT_HI` stores the difference between the upper test limit and the trace B data. Execute `MKPK HI;MKF?` to return the frequency of the largest signal that failed the test limit.

## Query Response

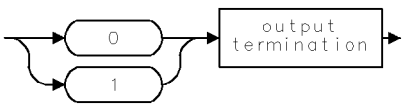

# LIMITYPE

LIMIT LINE: TYPE

Specify the limit-line segment type.

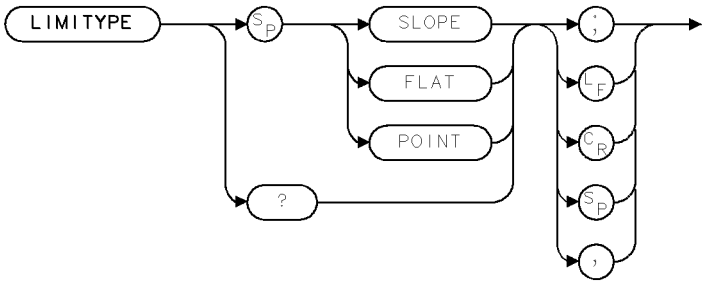


XLTYPE

| Item | Description |
|---|---|
| Preset State | SLOPE |
| Interdependent Commands | LIMIBOT, LIMIDEL, LIMIDONE, LIMIEDIT, LIMIHALF, LIMILINE, LIMINEXT, LIMIRCL, LIMISCRL, LIMISDEL, LIMISEG, LIMISEL |

## Example

```
10 OUTPUT 718;"LIMITYPE SLOPE;"
```

The LIMITYPE command specifies the type of the current limit-line segment to be either POINT, SLOPE, or FLAT. The query returns the current type or “NA” if not available.

## Query Response

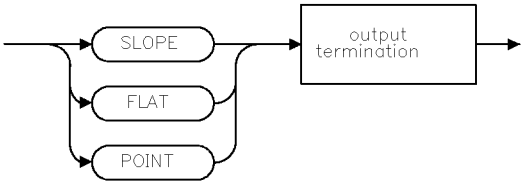


QLTYPE

# LIMTOCOR

LIMIT LINE DATA TO AMPLITUDE CORRECTION

Transfer limit-line data to amplitude-correction data.

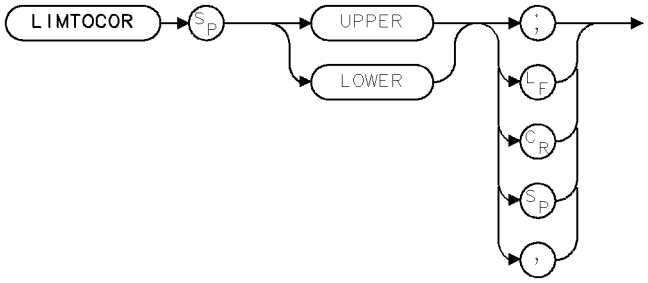


| Item | Description |
|---|---|
| Preset State<br>Interdependent<br>Commands | AMPCOR, CORTOLIM |

## Example

```
10 OUTPUT 718;"LIMTOCOR UPPER;"
```

The LIMTOCOR command transfers limit-line data to amplitude-correction data. Points stored as limit-line segments, which can also be edited via the front panel, are converted to amplitude-correction points and used as if entered with the AMPCOR command. When used with CORTOLIM, the amplitude-correction points can be edited.

# LINES

LINES

Connect lines between displayed trace points.

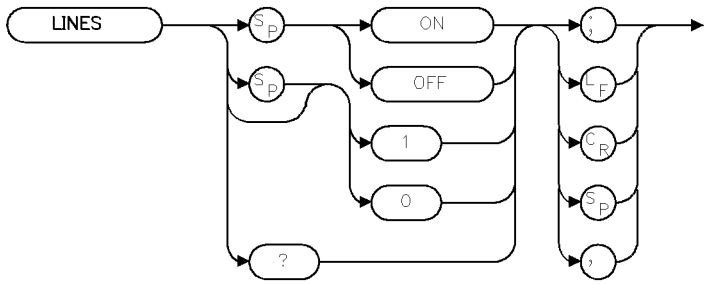


XLINES

| Item | Description |
|---|---|
| Preset State | ON |

## Example

```
10 OUTPUT 718;"LINES OFF;"
```

The LINES command connects or disconnects lines between the displayed trace points. When OFF is specified, displayed traces are shown as unconnected dots. The query returns the current state.

## Query Response

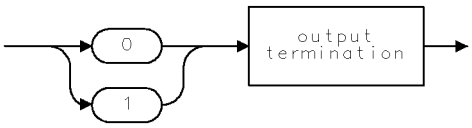


QGO1

# LINET

LINE TYPE

Draw dots or dashed lines.

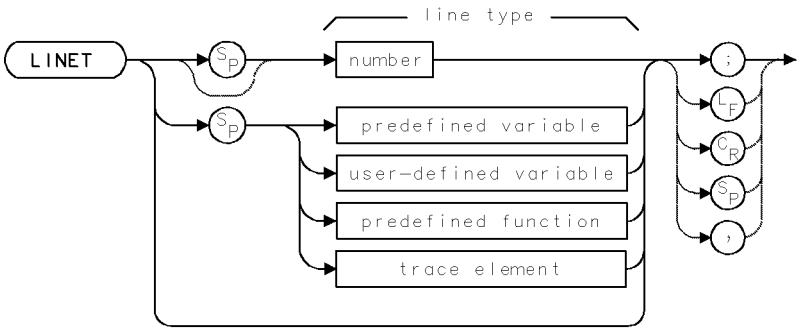


| Item | Description |
|---|---|
| Restrictions | Not applicable to HP 70004 Display |
| Requirements | VARDEF when using *user-defined variable*. |
| Line-Type Range | null, 0 – 8 |

## Example

Use LINET to draw on the display with different kinds of dashed lines.

```
10 OUTPUT 718;"CLRDSP;"          Clear graphics from memory.
20 OUTPUT 718;"PA 0,600;"        Place graphics pen at (0,600).
30 OUTPUT 718;"LINET;"           Activate solid-line drawing.
40 OUTPUT 718;"PD;PA 500,600;"   Place pen down and draw solid line to (500,600).
50 OUTPUT 718;"LINET 6;"         Activate dotted-line drawing.
60 OUTPUT 718;"PA 1000,1000;"    Draw dotted line to (1000,1000).
70 OUTPUT 718;"BLANK TRA;"       Blank trace A.
```

The LINET command selects the kind of line “drawn” on some displays (for example, HP 70205A graphics display or HP 70206A system graphics display) with the plot commands, such as PA and PR. Ten types of lines are available:

`LINET` plots a continuous line.

`LINET 0` plots the end points only.

`LINET 1` plots . . . . .

`LINET 2` plots _____ _____ _____

`LINET 3` plots _______ _______ _______

`LINET 4` plots _______ . _______ . _______

`LINET 5` plots ______ _ ______ _ ______ _

`LINET 6` plots ___ ___ ___ ___ ___

`LINET 7` plots __ __ __ __ __ __ __

`LINET 8` plots _ _ _ _ _ _ _ _ _ _ _ _ _ _ _

The line types are not reflected in plotter or printer outputs.

# LN

LINEAR

Set vertical scale of measurement results in linear terms.

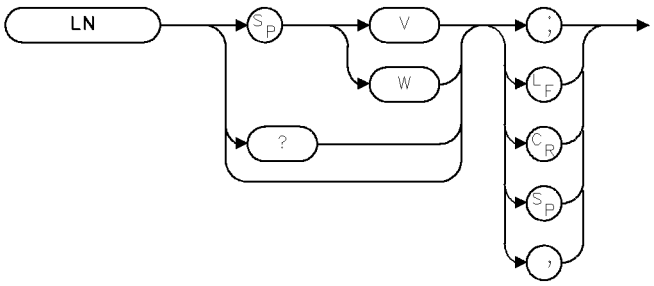


XLN

| Item | Description |
|---|---|
| Restrictions | MEASURE SR makes LN inactive.<br>V is not allowed in lightwave optical mode. |
| Requirements | If previous sweeps were during logarithmic mode, update trace<br>data to capture trace data in linear scale. |
| Preset State | V, for non-lightwave signal inputs<br>W, for lightwave signal inputs |
| Interdependent Commands | INPUT |

## Example

Activate the linear-display mode.

```
10 OUTPUT 718;"LN;"
```

The LN command activates the linear display mode. It scales the vertical divisions of the graticule proportional to the input voltage or power, as appropriate. The bottom graticule line represents a signal level of 0 units and the top is determined by the reference level.

The linear-display mode is not allowed while stimulus-response measurements are performed with a tracking-generator module. (See MEASURE and LG.) A voltage scale is not allowed for lightwave optical mode.

## Query Response

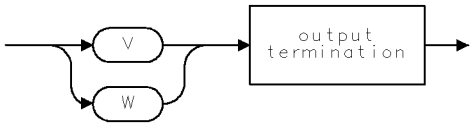


QLN

# LOAD

LOAD

Load article or file into **internal memory**.

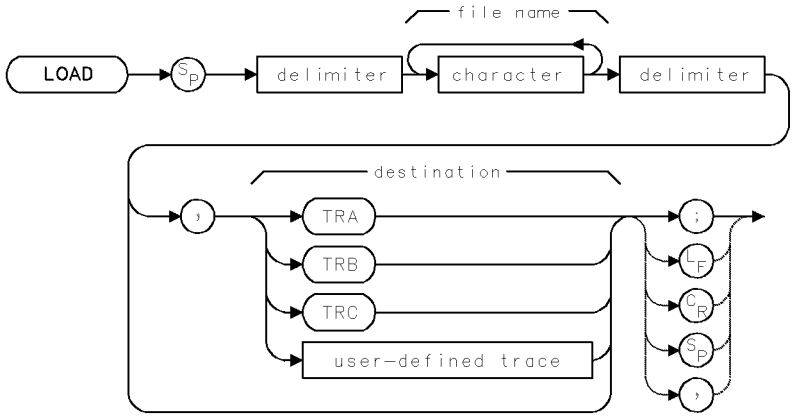


| Item | Description |
|---|---|
| Range | 1 – 10 characters |
| Requirements | Delimiters required before and after *file name* when it contains a number or lower-case letters. When *file name* is upper-case alpha characters only, delimiters are optional. Requires internal memory, depending on MSI selection and file contents. See Appendix D for commands that consume memory. |

## Example

Store trace B in a trace file, then recall it.

```
100 OUTPUT 718;"SNGLS;"                 Activate single-sweep mode.
110 OUTPUT 718;"CLRW TRB;TS;            Sweep trace B.
120 OUTPUT 718;"STOR T,$ALPHA$,TRB;"    Store trace B in trace file called ALPHA.
130 OUTPUT 718;"LOAD $ALPHA$,TRC;"      Load trace into trace C.
```

The LOAD command recalls to internal memory any ASCII file that consists of spectrum analyzer commands. These include files stored by the following commands:

- SAVES (state register files)
- SAVET (trace files)
- LIMISAV (limit-line files)
- SAVEU (user-key files)
- SAVED (files containing traces, user-defined functions or variables, or on-end-of-sweep algorithms)
- STOR (any file)

**LOAD**

The operation of the LOAD command varies with the contents of the file recalled.

- Files containing trace data are loaded into the specified trace, or trace A if the destination is not specified. All instrument settings are changed to reproduce the state the spectrum analyzer was in when the trace was stored. In addition, the trace is placed in view mode.
- Files containing user-defined variables, functions, traces, or keys are loaded into user memory. Any duplicate user-defined articles over-write the existing versions.
- Files containing an on-end-of-sweep algorithm are loaded into user memory. The existing on-end-of-sweep algorithm, if present, is erased and replaced with the loaded algorithm.
- Files containing a limit line are loaded into the limit-line table.
- Loading state-register files reactivates the stored instrument state.
- Loading user-key files reactivates the stored (USER)-key menu.

Always follow LOAD with the file name. The file name varies depending on the storing command used.

- When loading files stored by the STOR command, the file name is the same as that specified by STOR.
- When loading files stored by the SAVED, SAVES, SAVET, LIMISAV, or SAVEU command, the file name is a combination of the file prefix plus the file number.

  For example, executing `SAVEU 10` stores a file in user memory that is listed in the catalog as "u_10". The "u_" is the prefix. The "10" is the file number. Together they comprise the file name. The following table shows the default file prefixes.

**Table 2-13. Standard File Prefixes for Files Names**

| Article Stored | Storing Command | File Prefix |
|---|---|---|
| file containing user-key menu | SAVEU | u_ |
| file containing trace | SAVET | t_ |
| file containing user-defined variable, function, trace, or key | SAVED | d_ |
| file containing on-end-of-sweep algorithm | SAVED | d_ |
| file containing limit line | LIMISAV | l_ |
| file containing state register (instrument settings and title-line) | SAVES | s_ |

The PREFX command changes the file prefix for all files stored with SAVED, SAVES, SAVET, LIMISAV, and SAVEU. Thus, executing `PREFX $MARCH$;SAVEU 10` stores a file called "uMARCH_10". Notice that the PREFX command inserts letters between the "u" and "_".

To verify file names, press `State`, recall, `catalog & MSI` to view the catalog of user memory, which is the currently selected storage device (see MSI).

# LOG

LOGARITHM

Multiply logarithm by N.

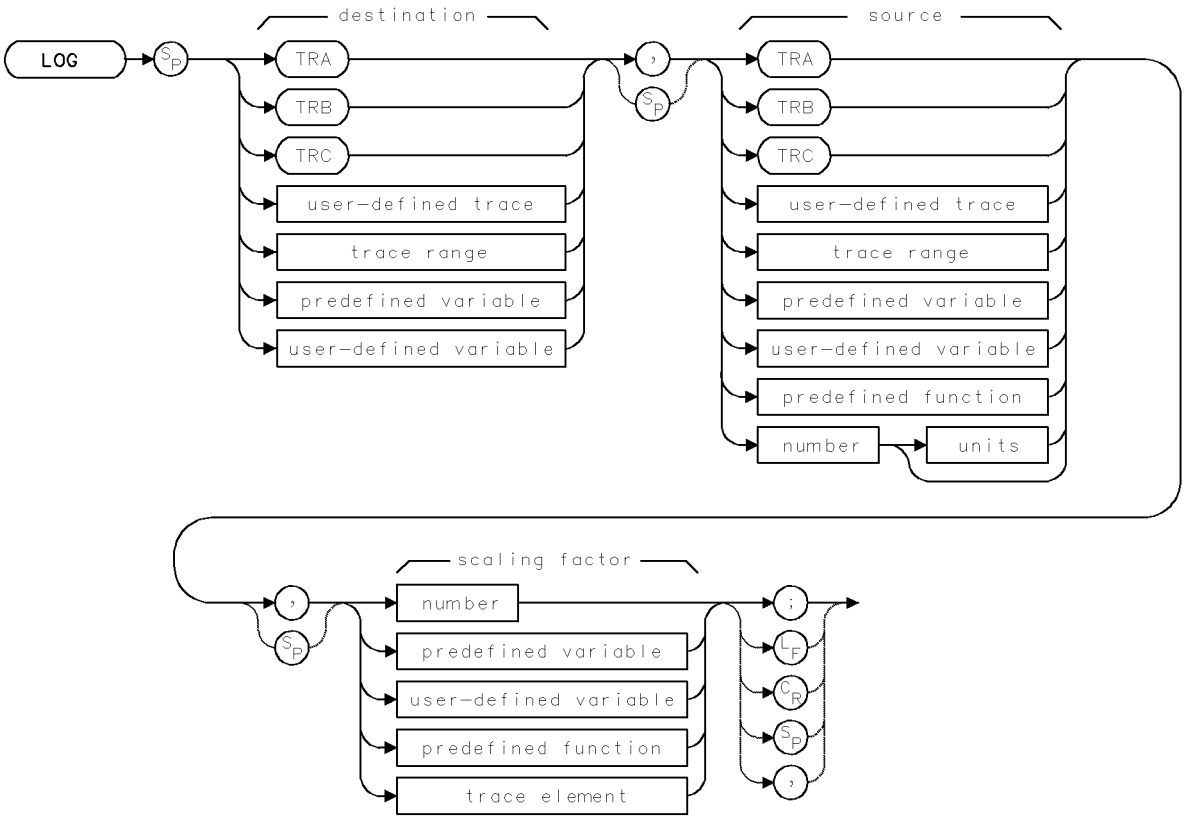


| Item | Description |
|---|---|
| Source or Destination Amplitude Range | 0 – 10,000 measurement units for linear trace data in *TRA*, *TRB*, *TRC*, or *user-defined trace*. −32,768 – +32,767 measurement units for logarithmic trace data in *TRA*, *TRB*, *TRC*, or *user-defined trace*. $\pm$ 1.8 $\times$ $10^{308}$ when using *number*, *predefined variable*, or *user-defined variable*. |
| Source-Length Range | 1 – 1024 position units. Default is 800 position units when using *TRA*, *TRB*, *TRC*. Truncated if longer than destination length. If shorter than destination length, last element is extended for operation. |
| Destination-Length Range | 1 – 1024 position units. |
| Requirements | Be sure data reflects one complete sweep when using *TRA*, *TRB*, *TRC*, or *trace range* for source. SNGLS and TS suggested. TRDEF required when using *user-defined trace*. VARDEF required when using *user-defined variable*. |

## Example

Calculate the decibel value of a power ratio using the LOG command.

```
20 CLEAR 718                        Initialize analyzer.
30 OUTPUT 718;"IP;"
40 OUTPUT 718;"VARDEF POWER,0;"     Define user-defined variable, called POWER, equal
                                    to 0
50 OUTPUT 718;"LOG POWER,5,10;"     POWER = 10 × LOG 5
60 OUTPUT 718;"POWER?;"             Return value of power to computer.
70 ENTER 718;N                      Assign value to computer variable.
80 DISP USING "D.DD,K";N;"dB"       Display value on computer display.
```

The LOG command computes the logarithm$_{(\text{base } 10)}$ of the source, multiplies it by the scaling factor, then stores the result in the destination:

LOG source × scaling factor ▸ destination

When a trace is used, be sure it contains a complete sweep of measurement information.

# LOSTART

LOCAL-OSCILLATOR START FREQUENCY

Set start frequency of local oscillator sweep.

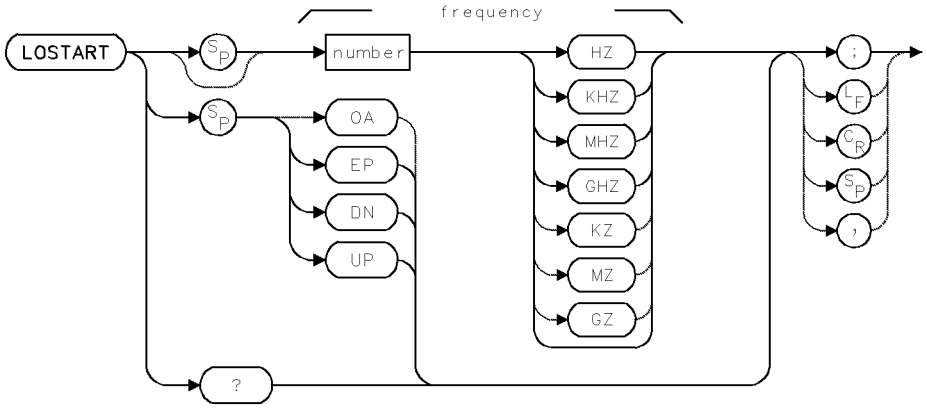


| Item | Description |
|---|---|
| Frequency Range | Actual range is hardware dependent. Firmware range is ± 1000 GHz |
| Step Increment | $(F_{LOSTOP} - F_{LOSTART}) \div 10$ |
| Requirements | Update trace data after executing LOSTART. |
| Interdependent Commands | Commands affecting frequency, such as CF, FA, FB, LOSTART, LOSTOP, HNLOCK, FS, SP, FOFFSET |
| Preset State | Lowest frequency allowed by system configuration |

## Example

Set the start frequency for measuring with an external mixer.

```
10 CLEAR 718                          Initialize analyzer.
20 OUTPUT 718;"IP;"
30 OUTPUT 718;"FULBAND K;"            Lock to the sixth local oscillator harmonic.
40 OUTPUT 718;"LOSTART 3.5GHz;"       Set local oscillator start frequency to 3.5 GHz.
```

## Example

Use the rear panel 1st LO OUT port (on the RF Section) as a continuous-wave source.

```
10 OUTPUT 718;"IP;"                   Preset analyzer
20 OUTPUT 718;"SP 0;"                 Activate zero-span mode.
30 OUTPUT 718;"LOSTART 4GHZ;"         Set the local oscillator frequency to 4 GHz.
```

## Frequency-Source Application

The LOSTART and LOSTOP commands may be used to control the frequency range of the RF section first LO auxiliary output port, when the port is used as a source. (See previous example.)

## External-Mixing Application

The LOSTART command sets the start frequency of the local oscillator sweep. LOSTART is used in conjunction with the HNLOCK and LOSTOP commands to specify a measurement range. See the HNLOCK command description for tuning equations.

If the selected harmonic is not compatible with the current local oscillator start and stop frequencies specified by LOSTART and LOSTOP, the start and stop frequencies are changed so that the local oscillator start and stop values remain unchanged.

When external mixing is not used and when measuring with the microwave RF-Section module, use PATHLOCK instead of HNLOCK to limit frequency measurements to a harmonic mixing product. (See PATHLOCK.)

The setting of the LO start frequency is coupled to the settings of all commands that control the analyzer tuning:

- Center frequency (CF)
- Start frequency (FA)
- Stop frequency (FB)
- Full span (FS)
- Span (SP)
- Harmonic lock (HNLOCK)
- Full band (FULBAND)
- Local-oscillator stop frequency (LOSTOP)

## Query Response

# LOSTOP

LOCAL-OSCILLATOR STOP FREQUENCY

Set stop frequency of local oscillator sweep.

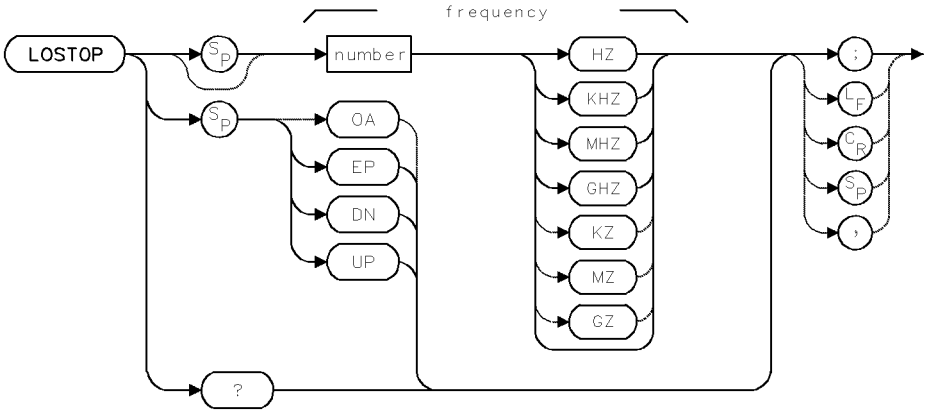


| Item | Description |
|---|---|
| Frequency Range | Actual range is hardware dependent. Firmware range is ± 1000 GHz |
| Step Increment | $(F_{LOSTOP} - F_{LOSTART}) \div 10$ |
| Requirements | Update trace data after executing LOSTOP. |
| Interdependent Commands | CF, FA, FB, LOSTART, HNLOCK, FS, SP, FOFFSET |
| Preset State | Lowest frequency allowed by system configuration |

## Example

Use the rear panel 1st LO OUT port (on the RF Section) as a continuous-wave source.

```
20 OUTPUT 718;"SP 0;"          Activate zero-span mode.
30 OUTPUT 718;"LOSTOP 4GHZ;"   Set the local oscillator frequency to 4 GHz.
```

## Example

Set the stop frequency for measuring with an external mixer.

```
10 CLEAR 718                   Initialize analyzer.
20 OUTPUT 718;"IP;"
30 OUTPUT 718;"FULBAND K;"     Lock to the sixth local oscillator harmonic.
40 OUTPUT 718;"LOSTOP 5GHZ;"   Set LO stop frequency to 5 GHz.
```

## Frequency-Source Application

The LOSTART and LOSTOP commands may be used to control the frequency range of the RF Section First LO Auxiliary Output port, when the port is used as a source. (See above example.)

## External-Mixing Application

The LOSTOP command sets the stop frequency of the local oscillator sweep. LOSTOP is used in conjunction with the HNLOCK and LOSTART commands to specify a measurement range. See the HNLOCK command description for tuning equations.

The setting of the stop frequency is coupled to the settings of all commands that affect the analyzer tuning:

- Center frequency (CF)
- Start frequency (FA)
- Stop frequency (FB)
- Full span (FS)
- Span (SP)
- Harmonic lock (HNLOCK)
- Full band (FULBAND)
- Local-oscillator stop frequency (LOSTOP)

## Query Response

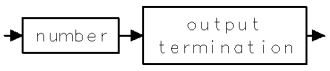

# MBIAS

MIXER BIAS

Bias external mixer.

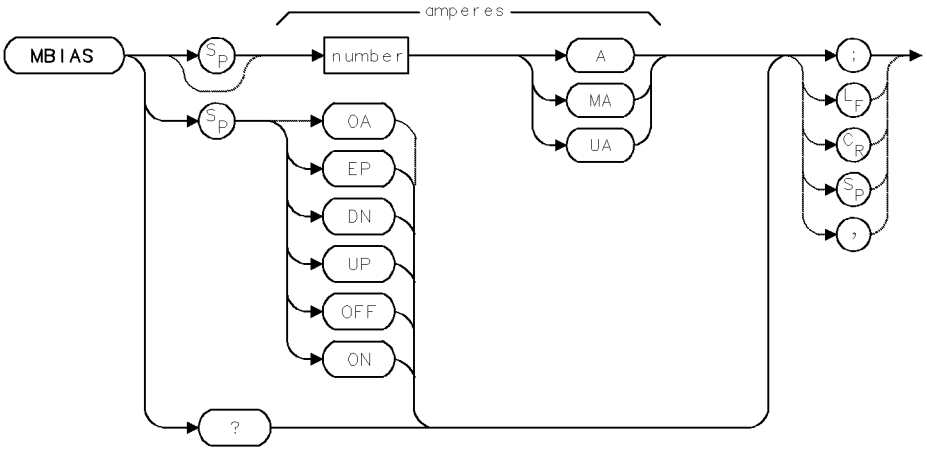


| Item | Description |
|---|---|
| Ampere Range | Hardware dependent |
| Step Increment | 1,2,5,10 sequence |
| Requirements | Input port on external mixer interface module (for example, HP 70900) must be active. |
| Interdependent Commands | INPUT, PINPUT |
| Preset State | `MBIAS 0A` |

## Example

Set external-mixer bias.

```
10 CLEAR 718                    Initialize analyzer.
20 OUTPUT 718;"IP;"
30 OUTPUT 718;"MBIAS 8000MA;"   Set the mixer bias current to 8 mA.
```

The MBIAS command controls the bias current at the external-mixing port on the external-mixer interface module. The command is operative only when an external-mixer interface module is in the system and its input port is active. `MBIAS OFF` sets the bias current to 0 (zero) amperes.

## Query Response

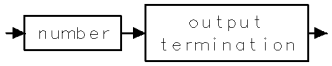

# MBIASPK

PEAK MIXER BIAS

Automatically bias external mixer.

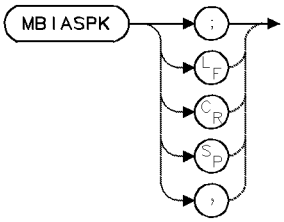


| Item | Description |
|---|---|
| Requirements | Input on external mixer interface module (for example, HP 70907) must be active. |
| Interdependent Commands | MKPX, MBMAX, MBMIN, MBRES, INPUT, PINPUT |

## Example

Place the active marker at the highest signal level and maximize mixer bias for the maximum response.

```
10 OUTPUT 718;"MBIASPK;"
```

The MBIASPK command controls the bias current at the external-mixer port on the external-mixer interface module. MBIASPK adjusts the bias current to maximize the amplitude of the marked response. If a response is not marked, MBIASPK places a marker on the largest signal before adjusting the bias.

MBIASPK calculates the best bias current within the range specified by the mixer-bias maximum, minimum, and resolution commands (MBMAX, MBMIN, and MBRES).

For best results, marked signals should be stable, and both sides of the detected signal envelope should be within the excursion range required by the marker-peak routines. (See MKPX.)

The command is operative only when an external-mixer-interface module is in the system and its input port is active. (See INPUT.)

# MBMAX

MAXIMUM MIXER BIAS

Determine maximum mixer bias activated by MBIASPK.

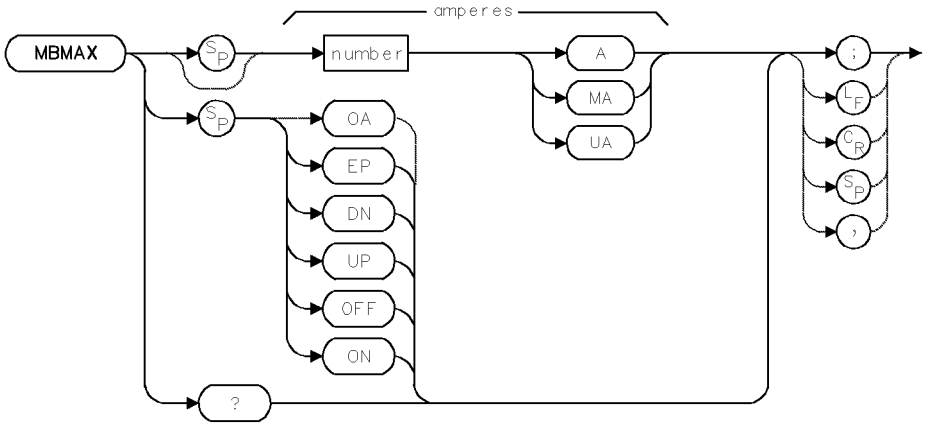


| Item | Description |
|---|---|
| Ampere Range | Varies with hardware |
| Step Increment | 1,2,5,10 sequence |
| Requirements | Input on external mixer interface section must be active. |
| Interdependent Commands | MBIASPK, MBMIN, MBRES, INPUT, PINPUT |
| Preset State | Hardware dependent:<br>`MBMAX 10MA` when HP 70907 input is active.<br>`MBMAX 0A` when input on RF Section or preselector is active (for example, HP 70904, 70905, 70906, 70908, and 70600) |

## Example

Specify the maximum bias current applied to the external mixer by MBIASPK.

```
10 OUTPUT 718;"MBMAX EP;"
```

*Enter the maximum bias current using front panel controls. Enter a number, then press* `ACCEPT VALUE`.

The MBMAX command specifies the maximum bias current applied to the external mixer by the MBIASPK algorithm. MBIASPK adjusts the bias current to maximize the amplitude of a signal. MBIASPK calculates the best bias by substituting different bias currents until the largest signal response is obtained. MBMAX specifies the largest bias current tested. MBMIN specifies the smallest bias current tested. MBRES determines the intermediary currents tested.

## Query Response

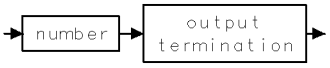

# MBMIN

MINIMUM MIXER BIAS

Determine minimum bias current activated by `MBIASPK`.

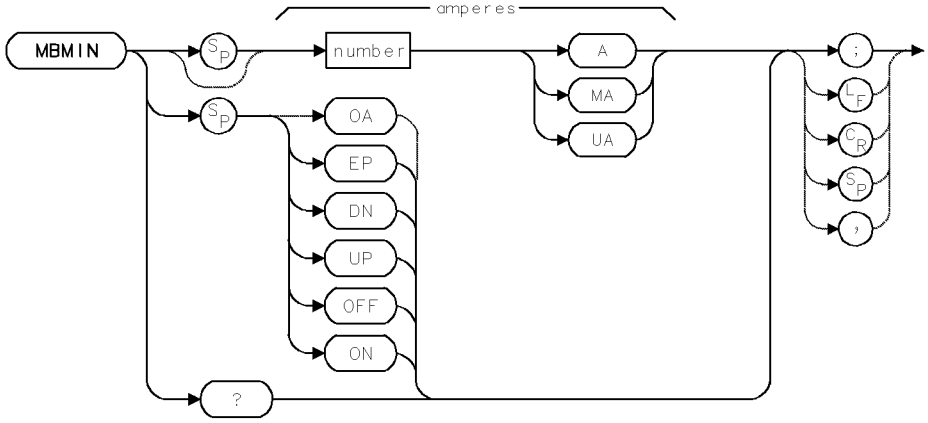


| Item | Description |
|---|---|
| Ampere Range | Varies with hardware |
| Step Increment | 1,2,5,10 sequence |
| Requirements | Input on external mixer interface section (for example, HP 70907) must be active. |
| Interdependent Commands | MBIASPK, MBMAX, MBRES, INPUT, PINPUT |
| Preset State | Hardware dependent:<br>`MBMIN -10MA` when HP 70907 input is active.<br>`MBMIN 0A` when input on RF Section or preselector is active (for example, HP 70904, 70905, 70906, 70908, and 70600) |

## Example

Specify the minimum bias current applied to the external mixer by the MBIASPK algorithm.

```
10 OUTPUT 718;"MBMIN -5MA;"
```

The MBMIN command specifies the minimum bias current applied to the external mixer by the MBIASPK algorithm.

## Query Response

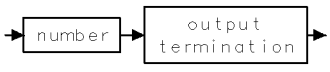

# MBRES

MIXER BIAS RESOLUTION

Determine possible bias currents tested by MBIASPK.

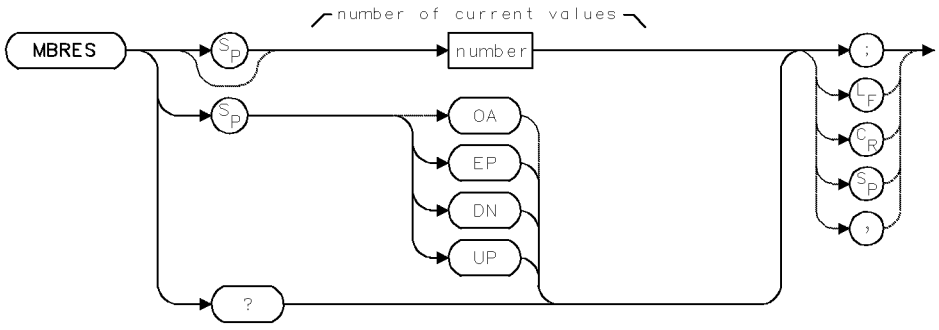


| Item | Description |
|---|---|
| Ampere Range | Minimum value is 1. Maximum varies with hardware. |
| Step Increment | 1,2,5,10 sequence |
| Requirements | Input on external mixer interface section must be active. |
| Interdependent Commands | MBIASPK, MBMAX, MBMIN, INPUT, PINPUT |
| Preset State | `MBRES 10` |

## Example

Specify the number of current values that the MBIASPK algorithm tests to determine the best bias current for the external mixer.

```
10 OUTPUT 718;"MBRES 50;"     Test 50 levels of bias current.
20 OUTPUT 718;"MBRES?;"       Return value to computer.
30 ENTER 718;N                Assign value to N.
```

The MBRES command specifies the number of different currents applied to the external mixer by the MBIASPK algorithm.

## Query Response

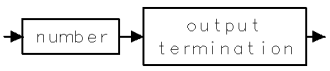

# MDS

MEASUREMENT DATA SIZE

Specify binary data as one byte or two bytes. Also specify number of significant figures.

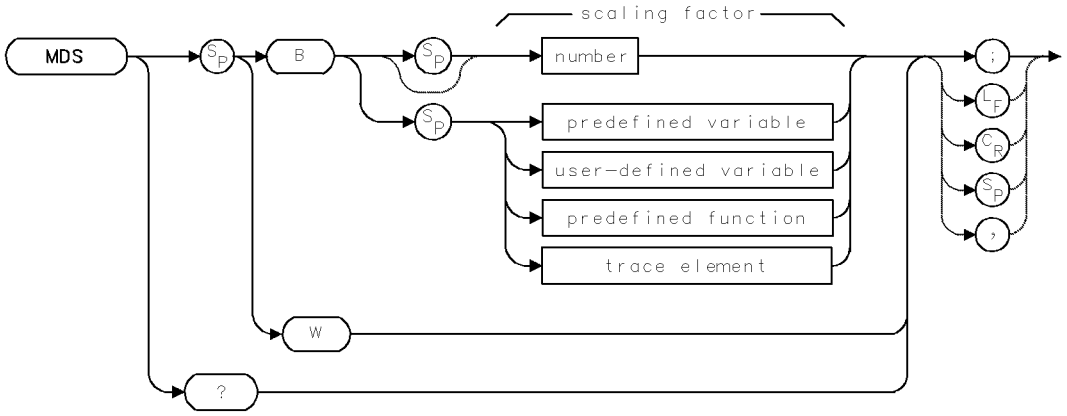


| Item | Description |
|---|---|
| Requirements | VARDEF required when using *user-defined variable*. |
| Scaling-Factor Range | 0 – 16 |
| Interdependent Commands | TDF |
| Preset State | MDS W |

## Example

Send trace data to computer as binary words (two 8-bit bytes).

```
5 CLEAR 718                              Initialize analyzer.
7 OUTPUT 718;"IP;"
10 INTEGER Z(1:800)                      Declare integer array.
20 ASSIGN @Sa TO 718                     Assign fast I/O path to 718.
30 ASSIGN @Sa_fast TO 718;FORMAT OFF
40 OUTPUT @Sa;"MDS W;"                   Define word as data size.
50 OUTPUT @Sa;"TDF B;"                   Activate binary data format.
60 OUTPUT @Sa;"TRA?;"                    Return amplitude of all trace elements in
                                         measurement units.
70 ENTER @Sa_fast USING "#,W";Z(*)       Terminate returned data. "W" specifies
                                         that items stored in Z(*) are words (two
                                         bytes).
80 PRINT Z(*)
```

The MDS command determines if binary data is transmitted as one byte or one word (two 8-bit bytes). In addition, MDS specifies the number of significant digits contained in the binary data. Use MDS to improve speed and economize on storage space in memory.

During normal operation, trace data is returned in decimal form. Use MDS when the TDF command specifies returned trace data as binary data. MDS also determines the format of data the spectrum analyzer receives from the computer.

`MDS B` multiplies each byte of data *received* by 2 raised to the power of the scaling factor. `MDS B` divides each byte of data *sent* by 2 raised to the power of the scaling factor. In the example below, the number 16 is processed with a scaling factor of 3. (Number 16 represents the amplitude of a trace data point.)

| Input Data | Output Data |
|---|---|
| $0001\ 0000 \times 2^3 = 1000\ 0000$ | $0001\ 0000 \div 2^3 = 0000\ 0010$ |

A scaling factor of 8 provides adequate resolution for most measurement applications.

For more information, see "Data Transfer to Controller" in the Programming Fundamentals chapter.

## Query Response

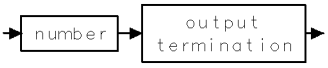

# MEAN

MEAN

Compute mean value.

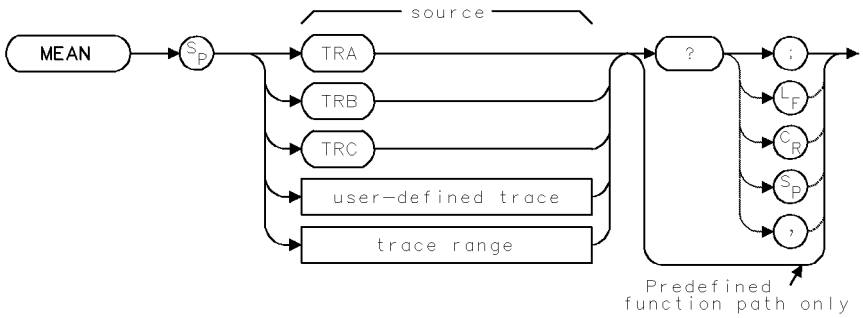


| Item | Description |
|---|---|
| Source-Length Range | 3 – 1024 position units. Default is 800 position units when using *TRA*, *TRB*, *TRC*. |
| Source-Amplitude Range | 0 – 10,000 measurement units for linear trace data in *TRA*, *TRB*, *TRC*, or *user-defined trace*. −32,768 – +32,767 measurement units for logarithmic trace data in *TRA*, *TRB*, *TRC*, or *user-defined trace*. |
| Requirements | Be sure data reflects one complete sweep when using *TRA*, *TRB*, or *TRC*. SNGLS and TS suggested. TRDEF required when using *trace range*. |

## Example

Calculate the mean value of the amplitudes in trace A.

```
20 CLEAR 718                          Initialize analyzer.
30 OUTPUT 718;"IP;"
40 OUTPUT 718;"SNGLS;"                Activate single-sweep mode.
50 OUTPUT 718;"CF 300MHZ;SP 1MHZ;"    Set measurement range.
60 OUTPUT 718;"TS;"                   Sweep trace A.
70 OUTPUT 718;"MEAN TRA?;"            Return mean value of trace A.
80 ENTER 718;N                        Assign value to computer variable.
90 DISP "MEAN OF TRACE IS ";N         Display value on computer display.
```

The MEAN command calculates the mean value of the source. If a trace is used as the source, be sure it contains a complete sweep of measurement information.

MEAN must be used as either a query or as a source in another analyzer-command function. Form a query by ending the MEAN statement with a question mark (?). When used as a query, MEAN returns the mean value of the source.

Use MEAN as a source by incorporating the MEAN statement into the source of any spectrum analyzer command having *predefined function* in its syntax diagram. When MEAN is used as a source, the mean value of the source is used for operation by the command that contains MEAN.

See “Using Predefined Functions as Sources” under “Math Functions, Variables, and Trace Arrays” in the Programming Fundamentals chapter.

## Predefined-Function Syntax

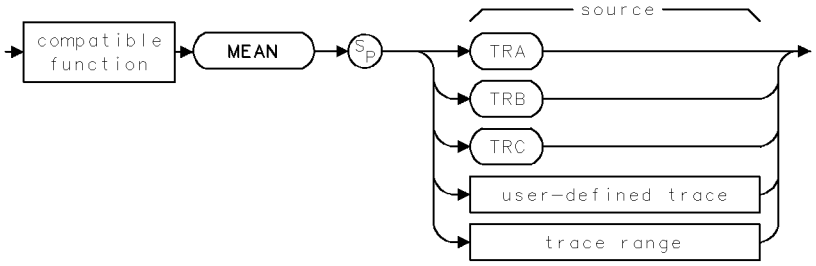


## Query Syntax

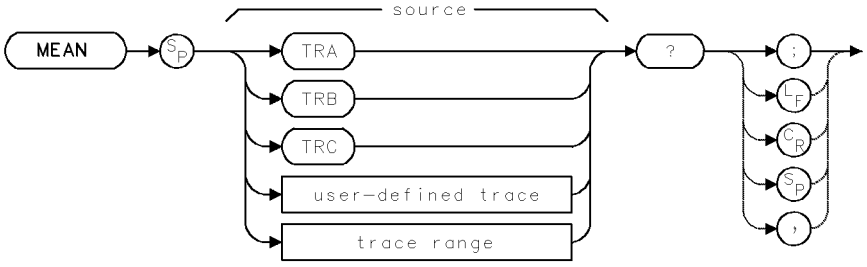


## Query Response

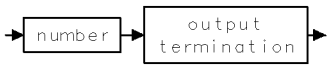

# MEASU

MEASUREMENT UNITS

Convert parameter units of amplitude to **measurement units.**

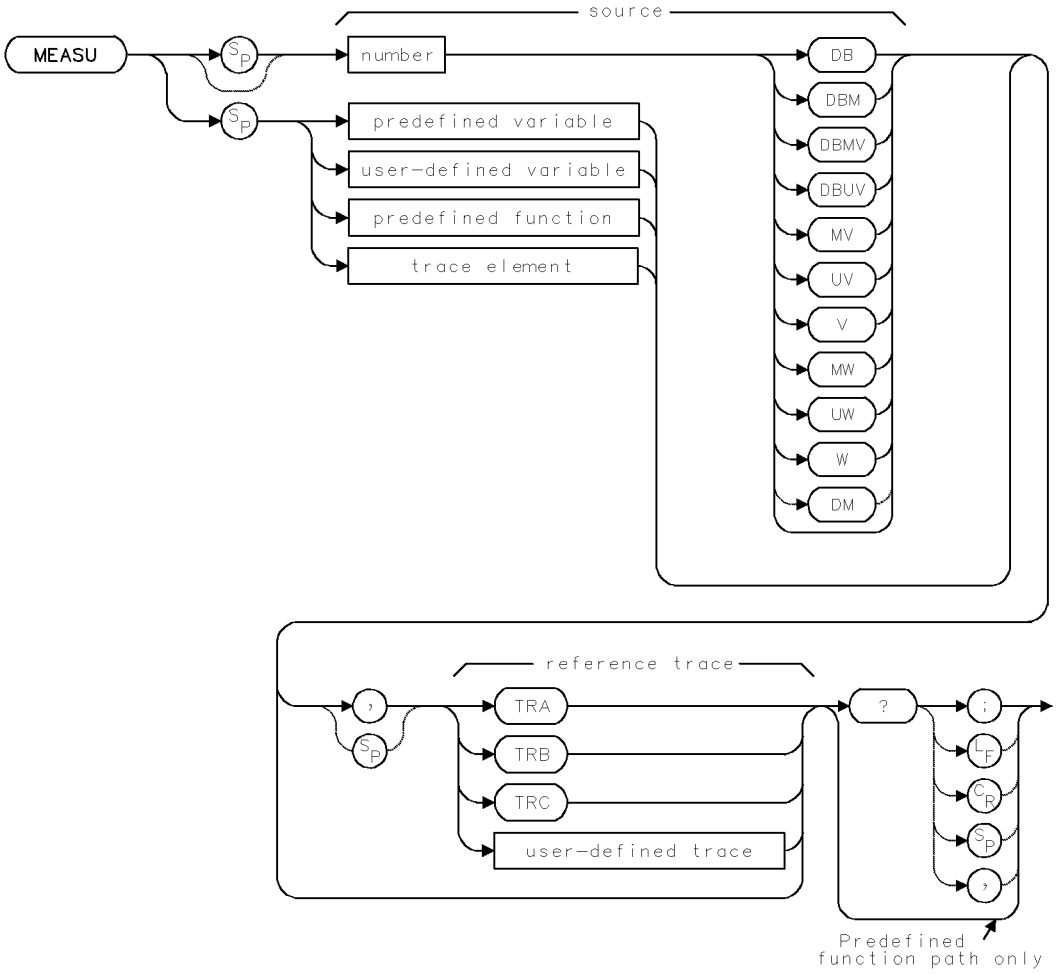

| Item | Description |
|---|---|
| Source-Amplitude Range | 0 – 10,000 measurement units for linear trace data in *TRA*, *TRB*, *TRC*, or *user-defined trace*. −32,768 – +32,767 measurement units for logarithmic trace data in *TRA*, *TRB*, *TRC*, or *user-defined trace*. |
| Reference-Trace Length Range | 3 – 1024 position units. Default is 800 position units when using *TRA*, *TRB*, *TRC*. |
| Reference-Trace Amplitude Range | 0 – 10,000 measurement units for linear trace data in *TRA*, *TRB*, *TRC*, or *user-defined trace*. −32,768 – +32,767 measurement units for logarithmic trace data in *TRA*, *TRB*, *TRC*, or *user-defined trace*. |
| Requirements | Be sure data reflects one complete sweep when using *TRA*, *TRB*, *TRC*. VARDEF required when using *user-defined variable*. |
| Interdependent Commands | Commands affecting amplitude, such as ROFFSET, MEASURE, INZ, LN, LG, RL, AUNITS |

## Example

Use the MEASU and POSU commands to position graphics on the analyzer display in measurement units and in position units.

```
10 CLEAR 718                                                    Initialize analyzer.
20 OUTPUT 718;"IP;"
30 OUTPUT 718;"CLRDSP;"                                         Clear graphics from memory.
40 OUTPUT 718;"SP 1MHZ;CF 300MHZ;TS;"                           Set measurement range.
50 OUTPUT 718;"SCALE 0,800,-11003,502;"                         Set graphics scale for the
                                                                display of traces.
60 OUTPUT 718;"PU;PA 0,MEASU -37DBM,TRA;"                       place the pen on the left
                                                                edge of the graticule at
                                                                -37 dBm.
70 OUTPUT 718;"PD;PA POSU 300MHZ,TRA,MEASU -22DBM,TRA;"         Draw line to the point
                                                                at 300 MHz and -22 dBm.
80 OUTPUT 718;"PU;PA 0,MEASU -25DBM,TRA;"                       Move pen to the left edge
                                                                of the graticule, at -25 dBm.
90 OUTPUT 718;"PD;PA 800,MEASU -30DBM,TRA;"                     Draw a line to the right
                                                                edge of the graticule, end-
                                                                ing at -30 dBm.
```

The MEASU command converts parameter-unit values to measurement-unit values.

- **Measurement units** describe trace amplitude information. A measurement unit is one hundredth of a dBm: [value in dBm] × 100 = measurement units
  - For linear trace information, measurement units are defined as 0 (zero) for the bottom of the display, and 10,000 for the top of the display (reference level).
  - For logarithmic trace information, the range of trace data is −32,768 measurement units to +32,767 measurement units.
- **Parameter units** are standard scientific units:

**Table 2-14. Parameter Units for Amplitude**

| Decibels | Watts | Volts |
|---|---|---|
| dB | W | V |
| dBm | mW | mV |
| dBmV | $\mu$W | $\mu$V |
| dB$\mu$V | | |

Use the MEASU command to preserve decimal values. All trace amplitude information is stored internally and manipulated in measurement units. This means a −10 dBm reference-level value is converted to −1000 measurement units before it is transferred to a trace element. (Recall that a measurement unit is one hundredth of a decibel.) This process is invisible to the user except in math and move functions when the source consists of a variable or real number, and the destination is a trace array or element. In this case, the source and destination express numbers in different units, making a conversion necessary. If the conversion is omitted, returned data will be inaccurate by a factor of 100 and significant digits can be lost. (See "Math Functions, Variables, and Trace Arrays" in the Programming Fundamentals chapter for detailed instructions concerning trace math.)

If the reference trace is not specified, the last active trace is the reference trace. If the units are not specified, the AUNITS command determines the units.

MEASU must be used as either a query or as a source in another analyzer-command function. Form a query by ending the MEASU statement with a question mark (?). When used as a query, MEASU returns the measurement-unit value of the source.

Use MEASU as a source by incorporating the MEASU statement into the source of any spectrum analyzer command having *predefined function* in its syntax diagram. When MEASU is used as a source, the measurement-unit value of the source is used for operation by the command that contains MEASU.

The following table lists commands that require the use of the MEASU command.

**Table 2-15.**
**Math and Move Commands that May Require Conversion with the MEASU Command**

| Command | Definition |
|---|---|
| ABS | Compute absolute value. |
| ADD | Add sources, point by point. |
| AVG | Average source with destination, point by point. |
| BIT | Store or return value of bit. |
| CONCAT | Concatenate trace. |
| DIV | Divide sources, point by point, discard remainder. |
| EXP | Divide source by scaling factor and raise to power of 10. |
| INT | Compute integer value. |
| LOG | Compute logarithm. |
| MEAN | Compute mean value of data points. |
| MIN | Retain minimum value. |
| MOD | Divide sources, point by point, retain remainder. |
| MOV | Duplicate value(s) contained in source and place in destination. |
| MPY | Multiply sources, point by point. |
| MXM | Retain maximum value. |
| RMS | Compute root mean square of source, point by point. |
| SQR | Compute square root of source, point by point. |
| STDEV | Compute standard deviation. |
| SUB | Subtract sources, point by point. |
| SUM | Add sources, point by point. |
| SUMSQR | Add square of sources, point by point. |
| VARIANCE | Compute variance. |
| XCH | Exchange sources. |

See "Using Predefined Functions as Sources" in "Math Functions, Variables, and Trace Arrays" in the Programming Fundamentals chapter.

## Predefined-Function Syntax

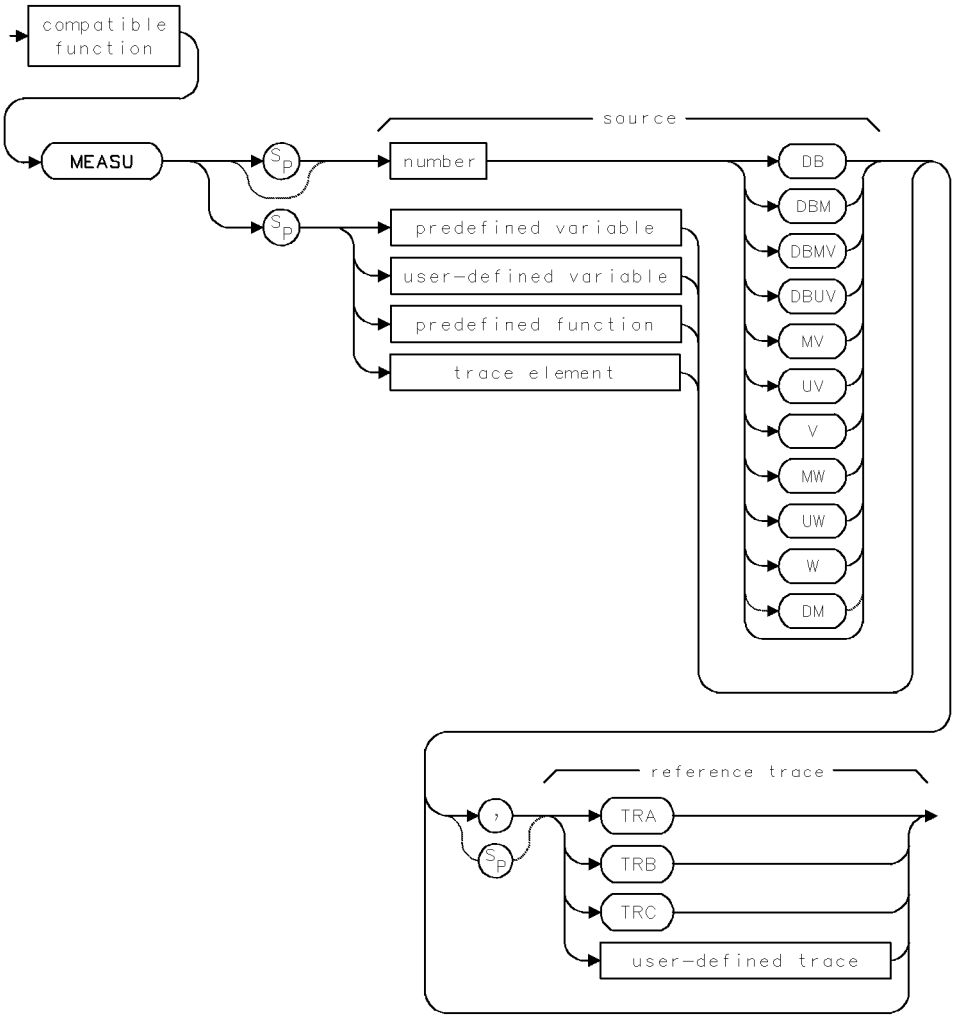


## Query Syntax

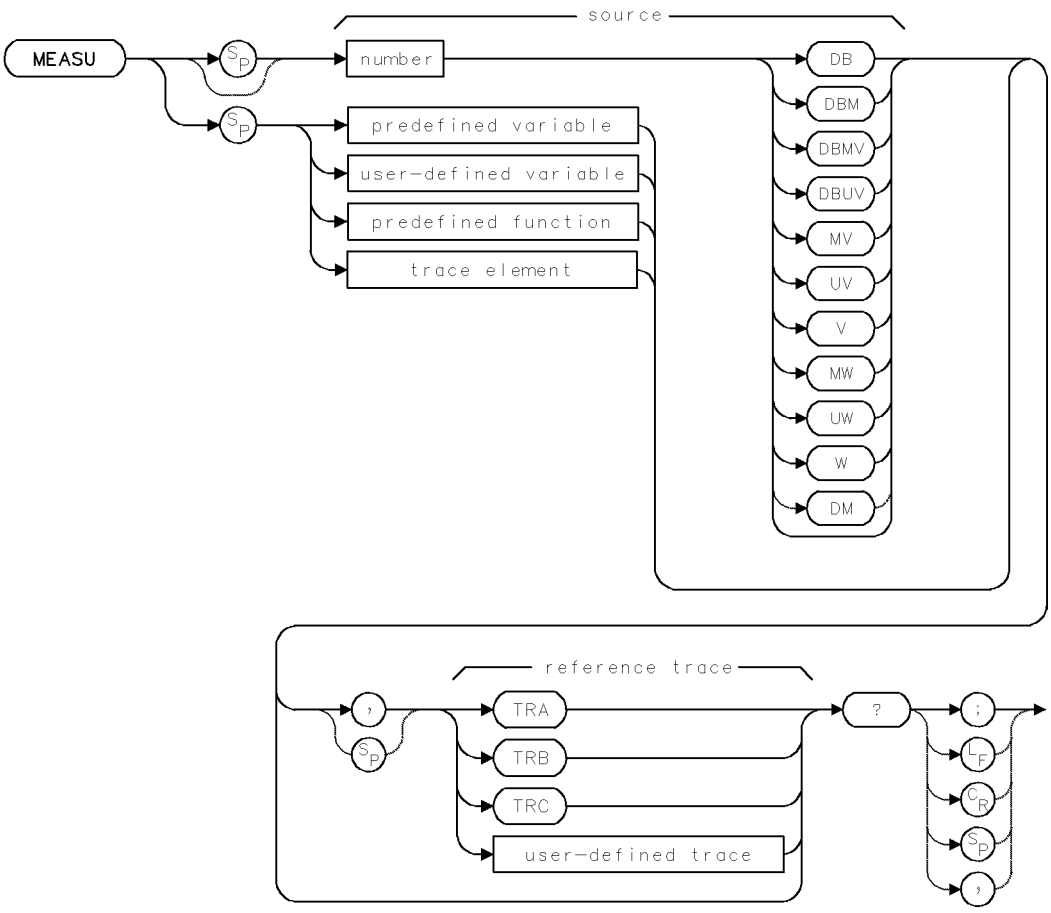


## Query Response

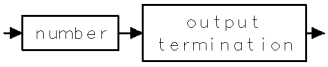

# MEASURE

MEASURE MODE

Select spectrum-analysis or stimulus-response mode.

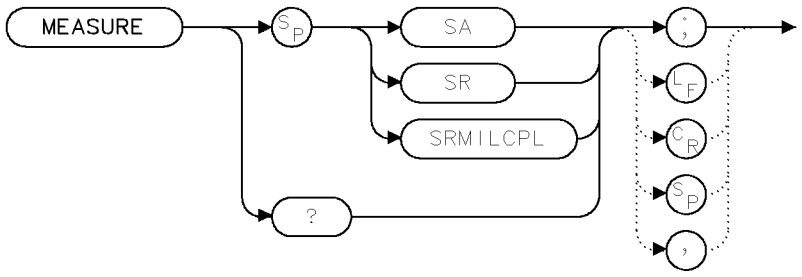


| Item | Description |
|---|---|
| Interdependent Commands | Commands affecting amplitude, such as LN, AUNITS, RL, ROFFSET, INZ, AMPU, MEASU, DL, TH, MKA, MKREAD, MKRL |
| Preset State | `MEASURE SA` |

## Example

Activate the tracking-generator source output.

```
10 OUTPUT 718;"MEASURE SR;"     Set analyzer to stimulus-response mode.
20 OUTPUT 718;"SRCPWR;"         Turn on power at source output port on tracking
                                generator.
```

The MEASURE command determines what kind of measurements the modular measurement system makes.

| Argument | Definition |
|---|---|
| `SA` | Activates spectrum analysis, where all amplitude units are specified in absolute values determined by:<br>■ Amplitude units (AUNITS)<br>■ Reference level (RL)<br>■ Reference-level offset (ROFFSET)<br>■ Logarithm scale (LG)<br>■ Linear scale (LN)<br>■ Amplitude correction (AMPCOR) |
| `SR` | Activates stimulus-response measurements where amplitude units are specified relative to a reference level of 0 dB when the A-minus-B or A-minus-C commands, AMB or AMC, are executed. During relative-amplitude mode, the following parameters are in dB:<br>■ Trace data (TRA, TRB, TRC)<br>■ Trace data conversions (AMPU and MEASU)<br>■ Display line (DL)<br>■ Threshold (TH)<br>■ Marker amplitude (MKA) |

- Reference level

`SRMILCPL` This argument is identical to the `SR` argument except that system gains are allowed to change. For example, gain can change due to changes in the reference level.

## Query Response

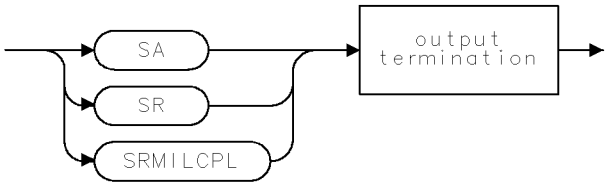


qmeasr

When the `INSTMODE` command is set to PD or SR, `MEASURE SR` is automatically activated.

# MEM

MEMORY

Return amount of available **internal memory**.

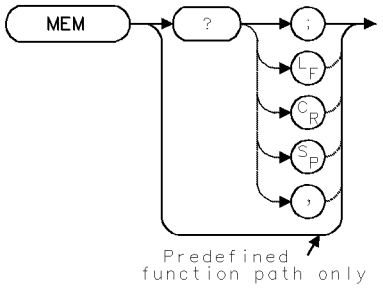


| Item | Description |
|---|---|
| Interdependent Commands | ACTDEF, AMPCOR, FUNCDEF, LIMILINE, LIMISAV, LOAD, NSTATE, ONEOS, PDA, PDF, RCLD, READMENU, REPEAT/UNTIL, SAVES, SAVET, SAVEU, STOR, TRDEF, USERERR, USERKEY, USERMSG, USTATE, VARDEF |

## Example

Determine how many trace arrays can fit into available internal memory.

```
20 CLEAR 718                          Initialize analyzer.
30 OUTPUT 718;"IP;"                   Define user-defined variable equal to 0.
40 OUTPUT 718;"VARDEF TEMP,0;"
50 OUTPUT 718;"DIV TEMP,MEM,846;"     Divide the number of available user-memory
                                      bytes by 846 and store the results in TEMP. (A
                                      400-point trace occupies 846 bytes.)
60 OUTPUT 718;"INT TEMP,TEMP;"        Store the integer value of TEMP in TEMP.
70 OUTPUT 718;"MEM?;"                 Return the amount of available internal mem-
                                      ory to the computer.
80 ENTER 718;N                        Assign value to N.
90 OUTPUT 718;"TEMP?;"                Return the value of TEMP to computer.
100 ENTER 718;M                       Assign value to M.
```

The MEM command computes the amount of unused **internal memory**.

The amount of total internal memory available is dependent on the analyzer configuration and the local oscillator firmware (ROM) version.

MEM must be used as either a query or as a source in another analyzer command. Form a query by ending the MEM statement with a question mark (?). When used as a query, MEM returns the amount of unused memory to the computer. Use MEM as a source by incorporating the MEM statement into the source of any spectrum analyzer command having *predefined function* in its syntax diagram. When MEM is used as a source, the value of unused memory is used for operation by the command that contains MEM.

See "Using Predefined Functions as Sources" under "Math Functions, Variables, and Trace Arrays" and see "Memory" in the Programming Fundamentals chapter.

## Predefined-Function Syntax

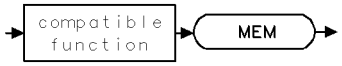


## Query Syntax

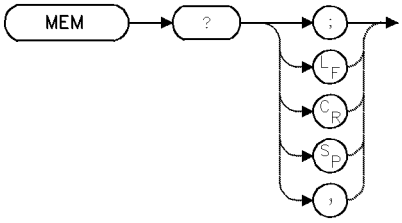


## Query Response

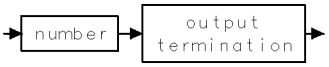

# MIL

MAXIMUM INPUT LEVEL

Specify maximum expected input level to control display of normalized measurement results.

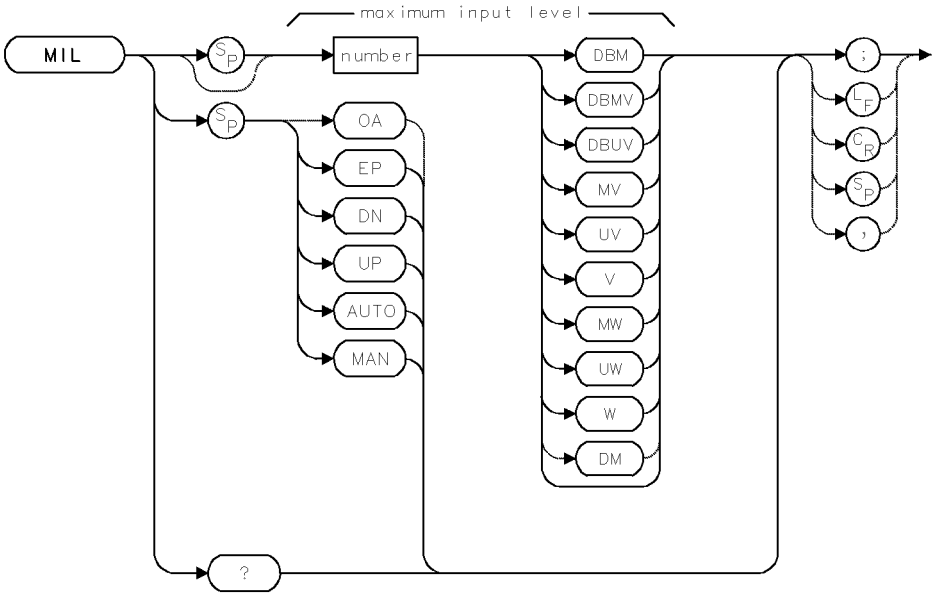


| Item | Description |
|---|---|
| Maximum-Input Level Range | Hardware dependent |
| Restriction | Use AMPCOR in conjunction with MIL carefully. See description. |
| Coupling | Attenuator (AT) is coupled to MIL. |
| Interdependent Commands | ML, AT, MEASURE, AMPCOR |
| Preset State | `MIL AUTO`<br>1. Equals 0 dBm during spectrum analyzer measurements (during absolute-measurement mode).<br>2. Equals the value active when AMC or AMB is executed during tracking-generator measurements when the relative-amplitude mode activated by `MEASURE SR`. |

## Example

Specify the maximum input level.

```
30 OUTPUT 718;"MIL EP;"
```

*Enter expected maximum input level using front panel keys. Press* `ACCEPT VALUE`.

The MIL command specifies a value for the maximum *expected* signal level to the *spectrum analyzer* input.

During relative-amplitude mode, MIL becomes the primary mechanism for positioning measurement results vertically on the display, since the reference level is a relative value that no longer corresponds to an absolute value at the top of the display.

The MIL command operates in conjunction with the mixer-level command, ML, which specifies the maximum signal level at the *mixer* input. Together, these key settings control the reference level (IF gain) and input attenuation of the analyzer so that any displayed signals whose peaks are below the top graticule line (or below a dashed line if it is present), have levels that do not exceed the selected maximum input level and are not affected significantly by gain compression.

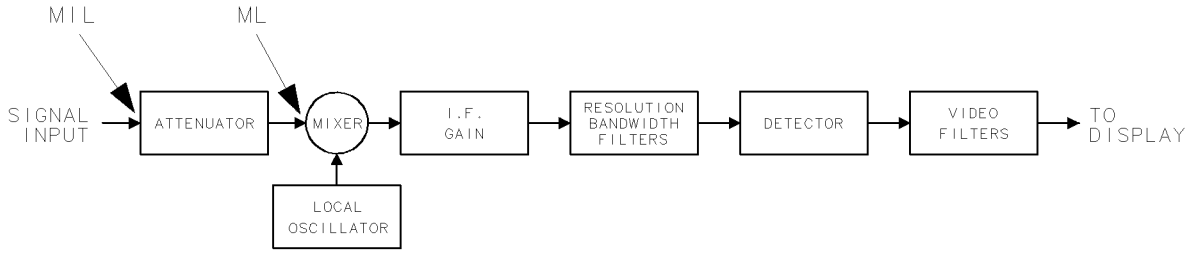


**Figure 2-5.**

When displayed responses are manipulated with trace math commands like AMC or AMB, specify the maximum input level as equal to the largest signal level you intend to measure at the analyzer input. This ensures that the analyzer attenuation and IF gain are adjusted automatically to display normalized measurement results.

Because the AMPCOR command adjusts IF gain and/or attenuation to compensate for unwanted loss or gain at the spectrum analyzer input, MIL should be used with caution when measuring signals that are near the compression level and at a frequency corrected by the AMPCOR command.

See *HP 70000 Modular Spectrum Analyzer Operating Manual*, "Gain Compression and Maximum Input Levels," under "Amplitude Functions" in the "Softkey Reference" chapter.

## Query Response

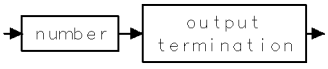

# MIN

MINIMUM

Compare the traces, then store lesser values.

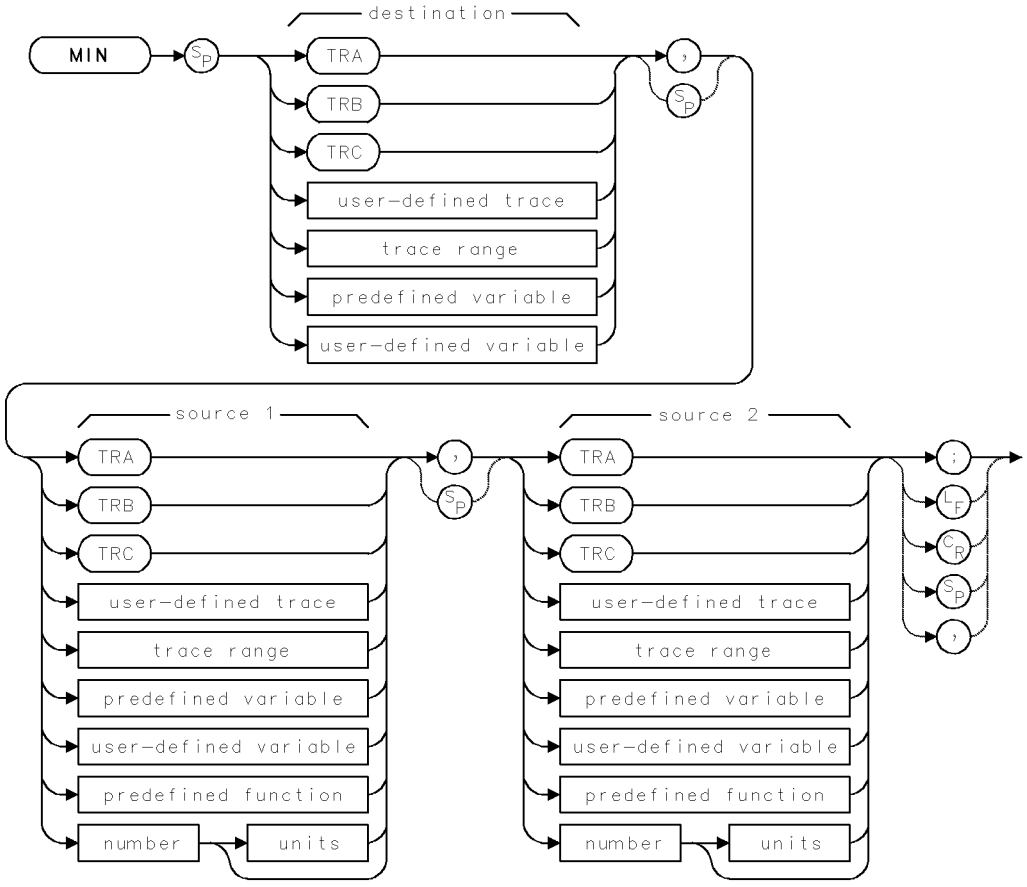

| Item | Description |
|---|---|
| Source or Destination Amplitude Range | 0 – 10,000 measurement units for linear trace data in *TRA*, *TRB*, *TRC*, *trace range*, or *user-defined trace*. −32,768 – +32,767 measurement units for logarithmic trace data in *TRA*, *TRB*, *TRC*, *trace range*, or *user-defined trace*. ± $1.8 \times 10^{308}$ when using *number*, *predefined variable*, or *user-defined variable*. |
| Source-Length Range | 1 – 1024 position units. Default is 800 position units when using *TRA*, *TRB*, *TRC*. Truncated if longer than destination length. If shorter than destination length, last element is extended for operation. |
| Destination-Length Range | 1 – 1024 position units. |
| Requirements | Be sure to update data with one complete sweep when using *TRA*, *TRB*, *TRC*. SNGLS and TS suggested. TRDEF required when using *user-defined trace*. VARDEF required when using *user-defined variable*. |

## Example

Compare the marker amplitude to −20 dBm, then display the lower value on the analyzer display.

```
10 CLEAR 718                              Initialize analyzer.
20 OUTPUT 718;"IP;"
30 OUTPUT 718;"CLRDSP;"                   Clear graphics from memory.
40 OUTPUT 718;"SNGLS;"                    Activate single-sweep mode.
50 OUTPUT 718;"VARDEF MINIMUM,0;"         Define user-defined variable equal to 0.
60 OUTPUT 718;"TS;MKPK HI;"               Sweep trace A. Place active marker at
                                          the highest signal level.
70 OUTPUT 718;"MIN MINIMUM,MKA,-20DBM;"   Compare the marker amplitude to −20 dBm.
                                          Store the smaller value in MINIMUM.
80 OUTPUT 718;"PU;PA 300,700;"            Move graphics pen to (300,700).
90 OUTPUT 718;"DSPLY MINIMUM,6,2;"        Display value of minimum.
100 OUTPUT 718;"TEXT $dBm$;"              Write "dBm" next to the variable.
```

The MIN command compares sources, point by point, sending the lesser values of each comparison to the destination. If one of the sources is a single value, it acts as a threshold, and all values equal to or less than the threshold pass to the destination.

If traces are used as sources, be sure each contains a complete sweep of measurement information.

# MINH

MINIMUM HOLD

Compare amplitude of current trace data to previous sweep, then retain lesser values.

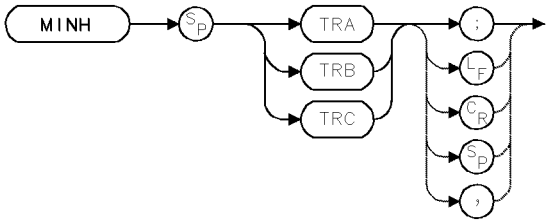


| Item | Description |
|---|---|
| Interdependent Commands | DET, TRPST, TM, VTL, VTH |

## Example

Retain minimum values measured.

```
30 OUTPUT 718;"MINH TRA;"
```

The MINH command compares the current amplitude value of each point on a trace as it sweeps to each point value detected during the previous sweep, then retains the minimum values. The trace is continuously swept, updated, and displayed. MINH also activates negative peak detection. (See DET.)

# MK

DISPLAY MARKER

Position a marker anywhere on the display.

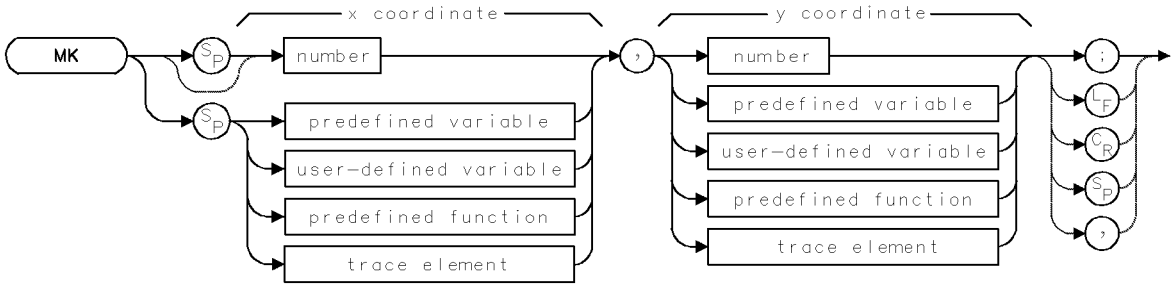


| Item | Description |
|---|---|
| X-Coordinate Range | Depends on SCALE or DWINDOW command. |
| Y-Coordinate Range | Depends on SCALE or DWINDOW command. |
| Requirements | PD required to place pen down, except during reference-graphics mode. |
| Interdependent Commands | IT, SCALE, DWINDOW, CLRDSP |

## Example

Position a marker anywhere on the analyzer display.

```
10 CLEAR 718                          Initialize analyzer.
20 OUTPUT 718;"IP;"
30 OUTPUT 718;"PD;MK 600,800;PU;"     Place pen down. Position marker at (600,800).
                                      Lift pen.
40 OUTPUT 718;"IT 1;MK 700,700;"      Activate reference-graphics mode and assign
                                      MK to item 1. Position marker at (700,700).
```

The MK command positions a marker anywhere on the analyzer display. Coordinates are specified in the current scale units, which are 0 to 1000 for the X and Y coordinates unless specified differently with the SCALE command or with the DWINDOW command if a window is active.

Use the MK command in conjunction with the PU and PD commands when the reference-graphics mode is off. During the reference-graphics mode, the marker is drawn at the item origin, as in the preceding example.

# MKA

MARKER AMPLITUDE

Position displayed marker according to amplitude, or return marker amplitude.

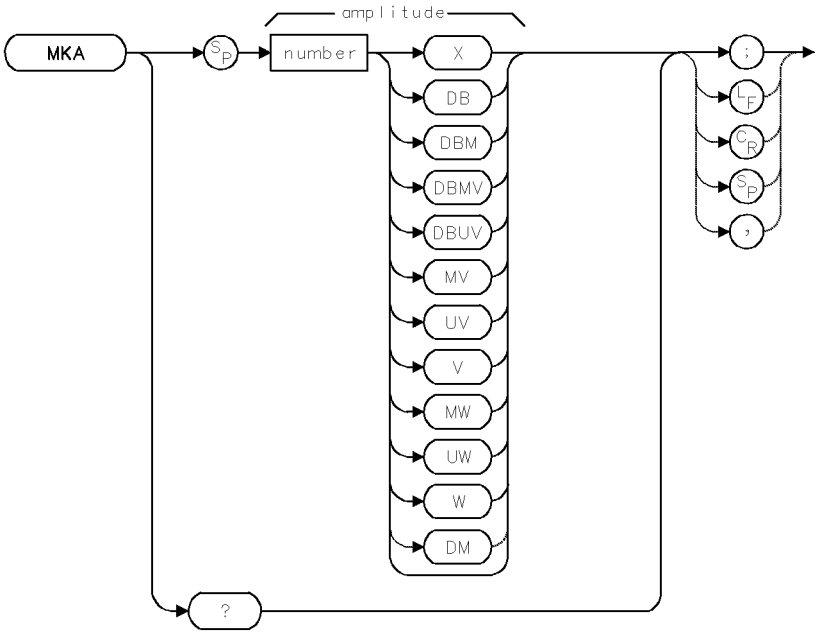


| Item | Description |
|---|---|
| Requirements | Must be in relative-marker mode when positioning marker. |
| Amplitude Range | ± 300 dB |
| Interdependent Commands | MKTRACE, MKOFF, MKREAD and commands that affect amplitude, such as AMPCOR, MEASURE, RL, ROFFSET, INZ, CNVLOSS |

## Example

Return amplitude of signal at marker.

```
20 CLEAR 718              Initialize analyzer.
30 OUTPUT 718;"IP;"
40 OUTPUT 718;"SNGLS;"    Activate single-sweep mode.
50 OUTPUT 718;"TS;"       Sweep trace A.
60 OUTPUT 718;"MKN;"      Display a marker at the center of the trace.
70 OUTPUT 718;"MKA?;"     Return marker amplitude to computer.
80 ENTER 718;N            Assign amplitude to computer variable.
90 DISP N                 Display N on computer display.
```

When the **relative-marker mode** has been activated by the MKAL or MKAR command, the MKA command specifies the amplitude of the **active marker**, or the amplitude difference between the **reference marker** and the active marker. If the vertical scale is logarithmic, marker amplitude is in decibels. If the vertical scale is linear, marker amplitude is in voltage, or is indicated as a ratio (specified by X in the syntax diagrams) during relative-amplitude mode.

If the active marker is not displayed, MKA places it on the trace at the specified amplitude. If the position of the marker is not specified, MKA places it at the center of the trace.

If more than one trace is displayed, MKA marks the active trace. If more than one trace is active, MKA marks trace A, B, or C, in that order; or marks the trace specified by the MKTRACE command.

The MKA query returns the amplitude of the active marker. As a predefined variable, MKA represents the active-marker amplitude, and can be very useful during math operations.

## Query Response

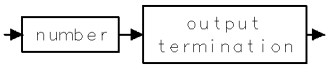

# MKACT

MARKER ACTIVE

Select active marker.

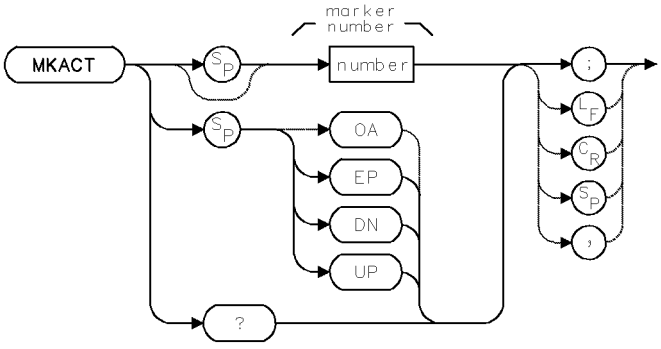


| Item | Description |
|---|---|
| Marker-Number Range | Integers, 1 – 5 |
| Step Increment | 1 |
| Interdependent Commands | MKAL, MKN, MKAR, MKD, MKOFF |
| Preset State | MKACT 0 |

## Example

Specify active-marker number.

```
10 OUTPUT 718;"MKACT 5;"    Define marker #5 as the active marker.
```

The MKACT command selects one of five markers as the active marker. All five markers can be displayed simultaneously, but only one can be active at a time. The active marker is highlighted and its number and position are notated at the upper right corner of the graticule. If no markers are displayed, MKACT places the active marker at the center of the trace.

Instrument preset (IP) turns off the markers.

Marker #1 is the active marker unless specified differently by the MKACT command.

## Query Response

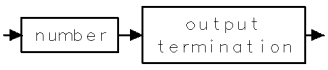


If markers are off, MKACT returns a 0.

# MKAL

MARKER AMPLITUDE LEFT

Position marker #2 to measure bandwidth.

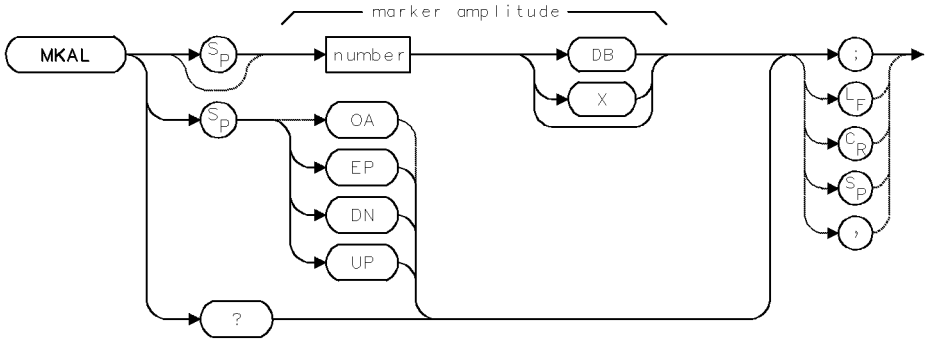


| Item | Description |
|---|---|
| Marker-Amplitude Range | ± 300 dBm |
| Step Increment | 1 major scale division |
| Requirements | Update trace data after executing MKAL. |
| Interdependent Commands | MKAR, MKBW, MKREAD, MKOFF and commands affecting amplitude such as MEASURE, AMPCOR, ROFFSET, CNVLOSS<br>Executing MKAL makes MKSS and MKSP inoperative. |
| Preset State | `MKAL 0` |

## Example

Position a marker 60 dB below the peak of a signal.

(Connect calibrator signal to analyzer input.)

```
20 CLEAR 718                          Initialize analyzer.
30 OUTPUT 718;"IP;"
40 OUTPUT 718;"CF 3E8;SP 1E4;TS;"     Set measurement range. Sweep the analyzer.
50 OUTPUT 718;"MKPK HI;"              Set marker at highest signal peak.
60 OUTPUT 718;"MKAL -60DB;"           Set amplitude-left marker 60 dB below refer-
                                      ence marker.
```

MKAL activates marker #2 and positions it on a trace *relative* to the amplitude of marker #1.

If marker #1 is not displayed, MKAL positions it at the center of the trace. If more than one trace is displayed, MKAL positions marker #1 on the active trace or on trace A, B, or C, in that order; or marks the trace specified by MKTRACE.

MKAL makes marker #1 a **reference marker** and marker #2 an active, **amplitude-left marker**.

The MKAL command also activates the **relative-marker mode**, which displays two markers and calculates the frequency and amplitude difference between them. When this mode is active, the MKA and MKAL commands specify the amplitude difference between the amplitude-left and reference markers. If the vertical scale of the display is logarithmic, the difference between the markers is in decibel units. If the vertical scale is linear, the difference between the markers is a voltage ratio. In the syntax diagrams, X represents the ratio of the marker amplitudes.

**MKAL**

Use MKAL with the MKAR and MKBW commands to simplify bandwidth measurements.

See MKPX, MKAR, and MKBW. See also *HP 70000 Modular Spectrum Analyzer Operating Manual*.

## Query Response

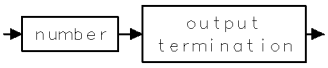

# MKAR

MARKER AMPLITUDE RIGHT

Position marker #3 to measure bandwidth.

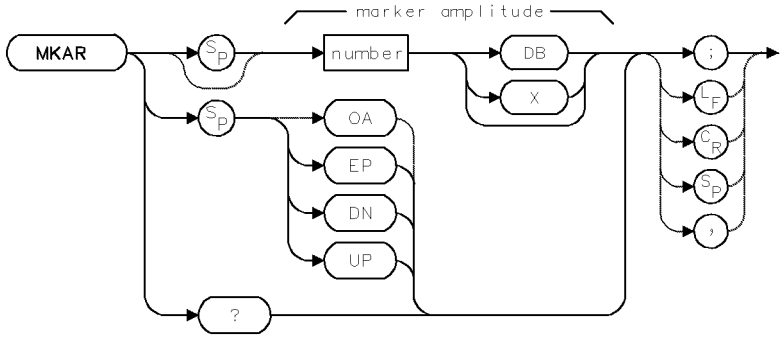


| Item | Description |
|---|---|
| Marker-Amplitude Range | ± 300 dBm |
| Step Increment | 1 major scale division |
| Requirements | Update trace data after executing MKAR. |
| Interdependent Commands | MKAL, MKBW, MKREAD, MKOFF and commands affecting amplitude such as MEASURE, AMPCOR, ROFFSET, CNVLOSS<br>Executing MKAR makes MKSS and MKSP inoperative. |
| Preset State | `MKAR 0` |

## Example

Position a marker 3 dB below the peak of a signal.

(Connect calibrator signal to analyzer input.)

```
20 CLEAR 718                          Initialize analyzer.
30 OUTPUT 718;"IP;"
40 OUTPUT 718;"CF 3E8;SP 1E4;TS;"     Set measurement range. Sweep the analyzer.
50 OUTPUT 718;"MKPK HI;"              Set marker at highest signal peak.
60 OUTPUT 718;"MKAR -3DB;"            Set amplitude-right marker 3 dB below refer-
                                      ence marker.
```

MKAR activates marker #3 and positions it on a trace *relative* to the amplitude of marker #1.

The MKAR command makes marker #1 a **reference marker** and marker #3 an **amplitude-right marker**.

The MKAR command also activates the **relative-marker mode**, which displays two markers and calculates the frequency and amplitude difference between them. When this mode is active, the MKA and MKAR commands specify the amplitude difference between the amplitude-right and reference markers. If the vertical scale of the display is logarithmic, the difference between the markers is in decibel units. If the vertical scale is linear, the difference between the markers is a voltage ratio. In the syntax diagrams, X represents the ratio of the marker amplitudes.

Use MKAR with the MKAL and MKBW commands to simplify bandwidth measurements.

If marker #1 is not displayed, MKAR positions it at the center of the trace. If more than one trace is displayed, MKAR positions marker #1 on the active trace or on trace A, B, or C, in that order; or marks the trace specified by MKTRACE.

See MKAL, MKBW, and MKPX. See also *HP 70000 Modular Spectrum Analyzer Operating Manual*.

## Query Response

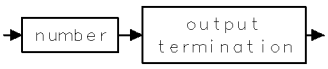

# MKBW

MARKER BANDWIDTH

Display frequency difference between #2 and #3 markers.

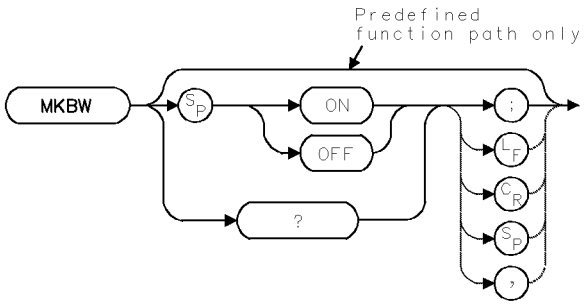


| Item | Description |
|---|---|
| Interdependent Commands | MKAL, MKAR |
| Preset State | MKBW OFF |

## Example

Measure the 60 dB bandwidth of a signal.

(Connect calibrator signal to analyzer input.)

```
40 OUTPUT 718;"CF 3E8;SP 1E4;SNGLS;TS;"   Set measurement range. Sweep the analyzer.
50 OUTPUT 718;"MKPK HI;"                  Set marker at highest signal peak.
60 OUTPUT 718;"MKAL -60DB;"               Set amplitude-left marker 60 dB below
                                          reference marker.
70 OUTPUT 718;"MKAR -60DB;"               Set amplitude-right marker 60 dB below
                                          reference marker.
80 OUTPUT 718;"MKBW ON;"                  Display frequency difference between
                                          amplitude-left and amplitude-right markers.
90 OUTPUT 718;"MKBW?;"                    Return frequency difference.
100 ENTER 718;N                           Assign value to computer variable.
```

The MKBW command displays the frequency difference between markers #2 and #3, even if the markers are not displayed. `MKBW?` returns the bandwidth value to the computer. `MKBW ON` displays the bandwidth in the message area. `MKBW OFF` blanks the message.

MKBW can be used as a source of another command. Use MKBW as a source by incorporating the MKBW statement into the source of any spectrum analyzer command having *predefined function* in its syntax diagram. When used as a source, MKBW uses the frequency difference for operation by the command that contains MKBW. See "Using Predefined Functions as Sources" under "Math Functions, Variables, and Trace Arrays" in the Programming Fundamentals chapter. See also MKAL and MKAR.

## Display Bandwidth, On/Off Syntax

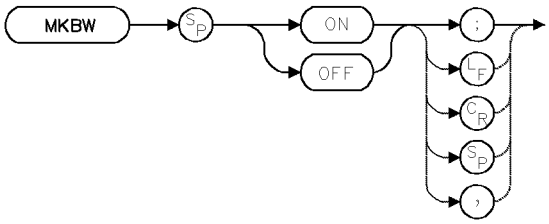


## Predefined-Function Syntax

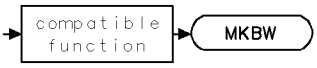


## Query Syntax

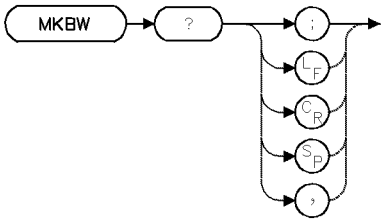


## Query Response

A zero is returned after `MKBW OFF` is executed.

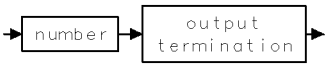

# MKBWA

MARKER BANDWIDTH AMPLITUDE

Display frequency difference X dB below marker peak.

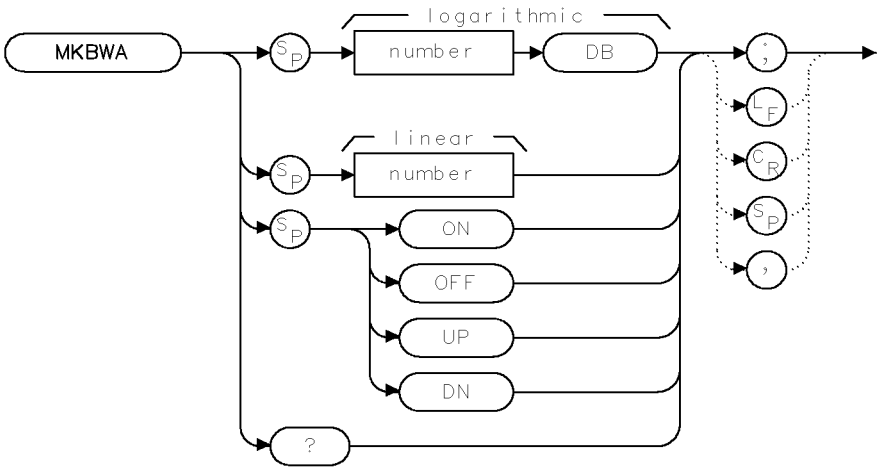


| Item | Description |
|---|---|
| Preset State | MKBWA 3DB |
| Linear Mode | Use bypass path; do not send number as dB units |
| LOG Mode | Use dB path; include dB with the number |

## Example

```
10 OUTPUT 723;"MKBWA -6DB;"      Set amplitude markers 6 dB below marker peak.
20 OUTPUT 723;"MKBWA ON;"        Display frequency difference between markers.
30 OUTPUT 723;"MKBW?;"           Query frequency difference.
```

The MKBWA command displays a signal's bandwidth at a user-specified amplitude below the signal's peak. Two markers are automatically placed at the amplitude offset you specify, and then the frequency difference between the markers is calculated and displayed. First, use the command to specify the amplitude to perform the bandwidth measurement. Then, turn MKBWA on to view the bandwidth.

## Query Response

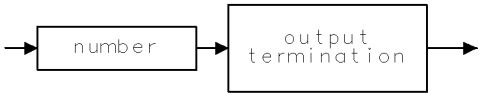


QMKBWA

## See Also

MKBW

# MKCF

MARKER TO CENTER FREQUENCY

Set center frequency equal to marker frequency.

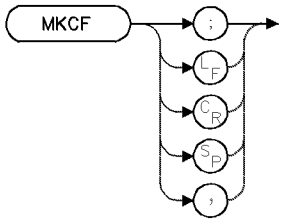


| Item | Description |
|---|---|
| Requirements | Update trace data after executing MKCF. |
| Interdependent Commands | MKTRACE, MKOFF |

## Example

Move the marker to the center of the display.

```
20 CLEAR 718                 Initialize analyzer.
30 OUTPUT 718;"IP;"
40 OUTPUT 718;"TS;"          Sweep measurement range.
50 OUTPUT 718;"MKN EP;"      Move the marker using the keypad, step keys, or knob. Press
                             ACCEPT VALUE.
60 OUTPUT 718;"MKCF;"        Move marker to center frequency.
70 OUTPUT 718;"TS;"          Sweep.
```

The MKCF command centers the active marker and the trace point it marks by setting the center frequency equal to the marker frequency. If the active marker is a relative type that has been Activated by the MKD, MKAL, or MKAR commands, an error condition occurs.

If no marker is displayed, MKCF positions a marker at the center of the trace. If more than one trace is displayed, MKCF positions it on the active trace or on trace A, B, or C, in that order; or marks the trace specified by MKTRACE.

# MKCONT

MARKER CONTINUE

Enables the sweep to continue past the marker.

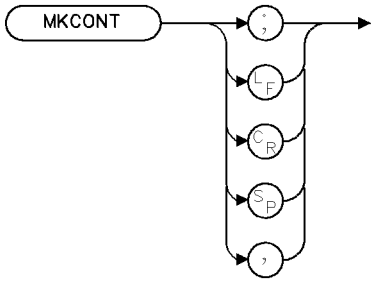


XMKCON

| Item | Description |
|---|---|
| Interdependent Commands | MKSTOP |

## Example

```
10 OUTPUT 718;"MKCONT;"
```

The MKCONT command enables the sweep to continue past the marker by turning off the MKSTOP command.

# MKD

MARKER DELTA

Position marker relative to reference marker, according to frequency.

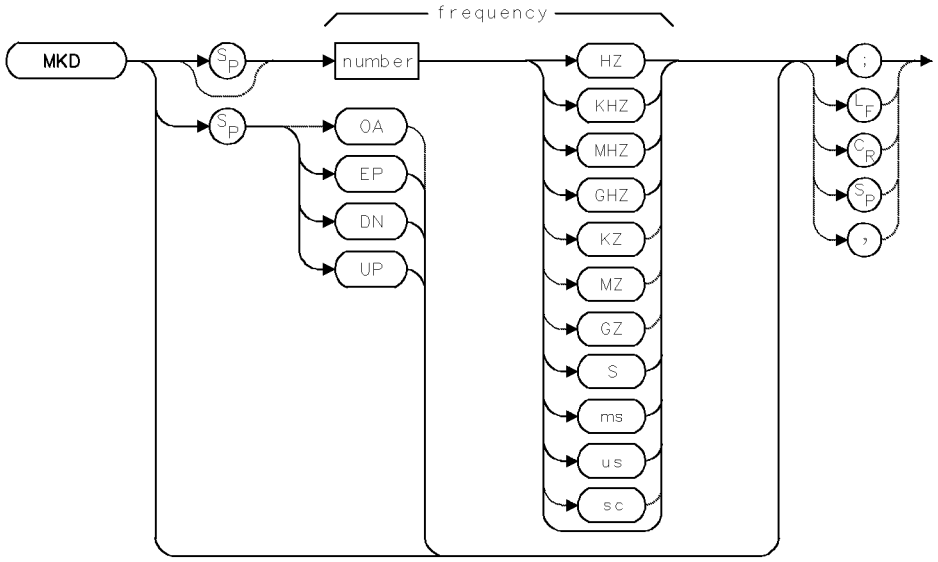


| Item | Description |
|---|---|
| Frequency Range | ± 1000 GHz |
| Step Increment | 1 major horizontal scale division |
| Requirements | Be sure trace data reflects one complete sweep. |
| Interdependent Commands | SP, MKTRACE |

## Example

Use markers to find the two highest signal levels displayed.

```
20 CLEAR 718                              Initialize analyzer.
30 OUTPUT 718;"IP;"
40 OUTPUT 718;"SNGLS;"                    Activate single-sweep mode.
50 OUTPUT 718;"FA 100MHZ;FB 1100MHZ;"     Set measurement range.
60 OUTPUT 718;"TS;"                       Sweep trace A.
70 OUTPUT 718;"MKPK HI;"                  Place marker on highest signal peak.
80 OUTPUT 718;"MKD;"                      Activate the delta marker mode. Since no
                                          value was specified with MKD, it places the
                                          delta marker at the position of the first
                                          marker. The delta marker is now active
                                          and under your control.
90 OUTPUT 718;"MKPK NH;"                  Move the delta marker to the next highest
                                          signal level.
```

MKD positions a second marker on a trace *relative* to the position of the active marker, called the **reference marker**. *Once positioned*, the new marker becomes the active marker and is called a **delta marker**.

### MKD

The delta marker is positioned in terms of frequency, or time if the analyzer is in zero span mode. Thus, `MKD 0` juxtaposes a delta marker on the reference marker. `MKD 10KHZ` places a delta marker at a frequency 10 kHz higher than the reference marker.

If no marker is active, MKD places two markers at the center of the active trace. If more than one trace is active, MKD places the marker on trace A, B, or C, in that order; or on the trace specified by the MKTRACE command.

The MKD command also activates the **relative-marker mode**, which displays two markers and calculates the frequency and amplitude difference between them. When this mode is active, both the MKF and MKD commands specify the frequency difference between the delta and reference markers.

# MKDACT

MARKER DELTA ACTIVE

Report which marker is the currently active delta marker.

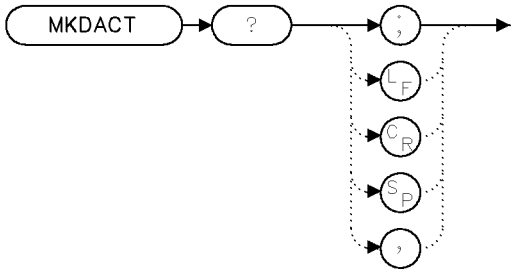


xmkact

## Example

```
100 OUTPUT 723;"MKDACT?;"
```

The MKDACT command reports the marker number of the currently active delta marker. The marker numbering is the same as for MKACT. If no delta marker is currently active, a value of 0 is returned.

## Query Response

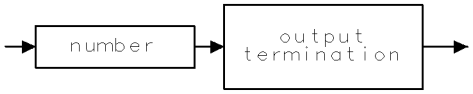


qgennum

## See Also

MKACT

# MKDREFA

MARKER DELTA REFERENCE AMPLITUDE

Set the general reference marker to a specific amplitude. Marker position is not restricted to a trace point.

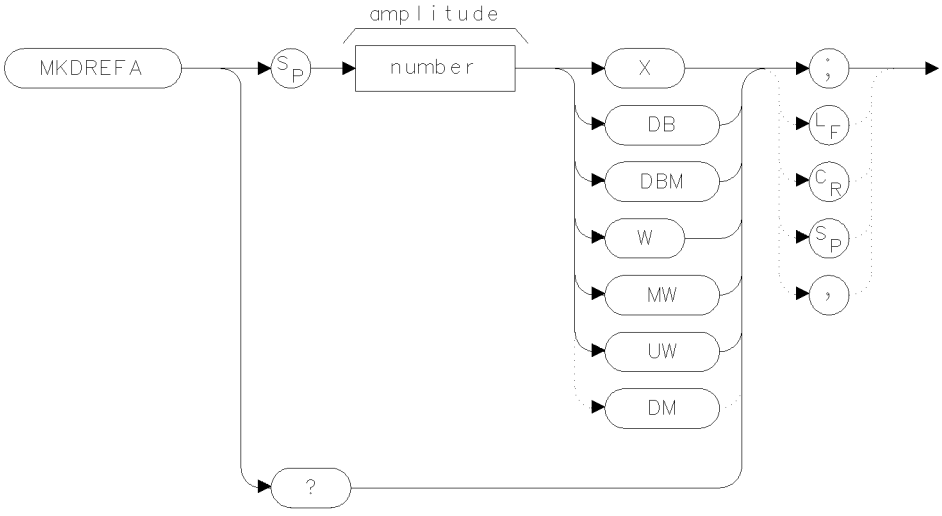


| Item | Description |
|---|---|
| Frequency Range | Actual range is hardware dependent.<br>Firmware range is ±1000 GHz. |
| Interdependent Commands | MKD, MKDREFF |

## Example

```
100 OUTPUT 723;"MKDREFA -23.5DB;"     Set the marker's vertical position.
110 OUTPUT 723;"MKDREFF 1.3GHZ;"      Set the marker's horizontal position.
```

The MKDREFA command, in conjuction with the MKDREFF command, positions the general reference marker anywhere on the display. (Normal active markers must reside upon a trace point, you can set only the marker's wavelength or amplitude, but not both. Refer to MKN, MKAL or MKAR.)

When the vertical scale is in logarithmic mode, the amplitude units are in dBm; in linear mode, the amplitude units are in watts (W, MW, or $\mu$W).

When relative-marker mode is activated with the MKAL or MKAR command, the MKDREFA command specifies the amplitude difference from the reference marker. When the vertical scale is in logarithmic mode, the amplitude units are in dBm; in linear mode, the amplitude units are in ratio, as indicated with the X in the syntax diagram.

## Query Response

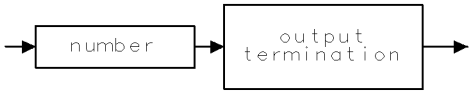


qgennum

## See Also

MKDREFF, MKA

# MKDREFF

MARKER DELTA REFERENCE FREQUENCY

Set the general reference marker to a specific frequency (or time in zero span). Marker position is not restricted to a trace point.

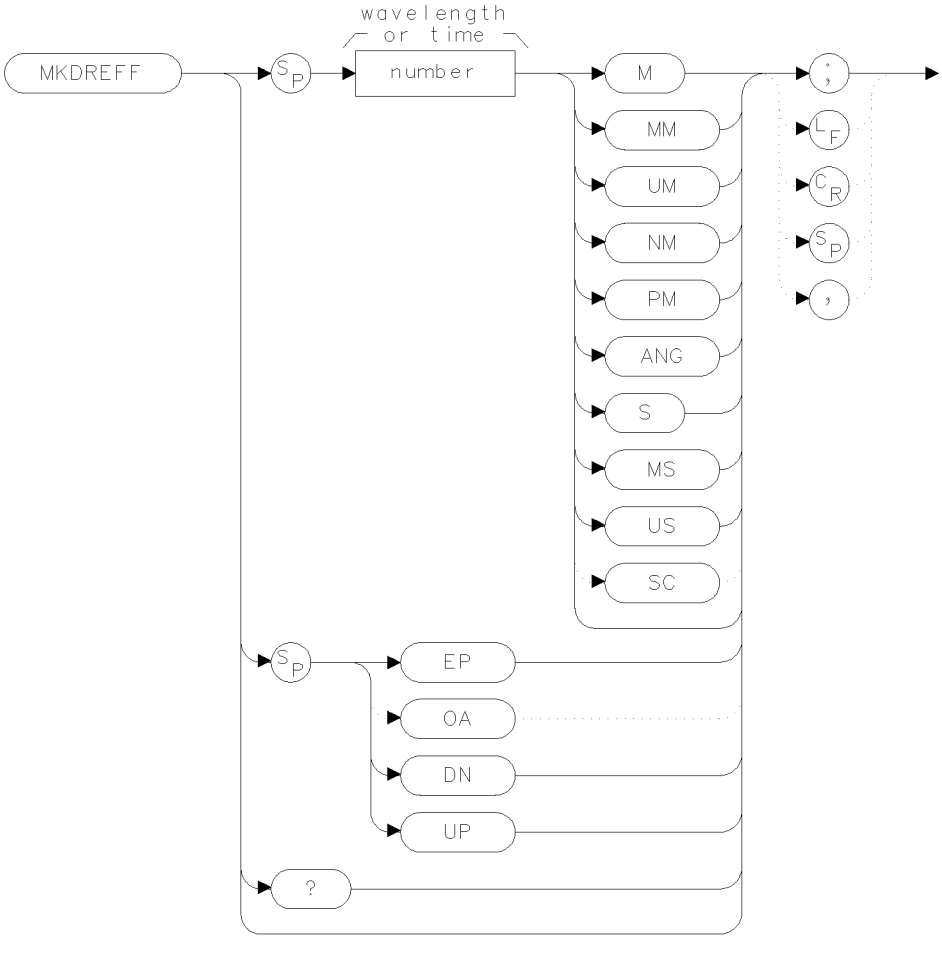


| Item | Description |
|---|---|
| Frequency Range | Actual range is hardware dependent.<br>Firmware range is ±1000 GHz. |
| Interdependent Commands | MKD, MKDREFA |

## Example

```
100 OUTPUT 723;"MKDREFA -23.5DB;"     Set the marker's vertical position.
110 OUTPUT 723;"MKDREFF 1.3GHZ;"      Set the marker's horizontal position.
```

The MKDREFF command, in conjuction with the MKDREFA command, positions the general reference marker anywhere on the display. This is in contrast to normal active markers which must reside upon a trace point. The MKDREFA command must be issued before the MKDREFF command. If the active marker is not displayed, MKDREFF places it at the specified frequency. If the position of the marker is not specified, MKDREFF places it at center screen.

For frequency spans greater than zero, the MKDREFF command returns the frequency of the active marker, or the frequency difference between the reference and delta marker when the relative-marker mode has been activated by the MKD command. For frequency spans equal to zero, MKDREFF returns the marker position in terms of time. As a predefined variable, MKDREFF represents either the frequency or time position of the active marker and can be very useful during math operations and data analysis. The marker readout and returned information varies depending on span and marker-readout setting selected by the MKREAD command.

## Query Response

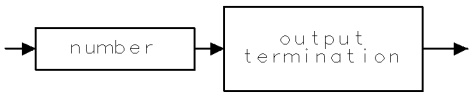


qgennum

## See Also

MKDREFA, MKA

# MKF

MARKER FREQUENCY

Position displayed marker according to frequency, or return marker frequency.

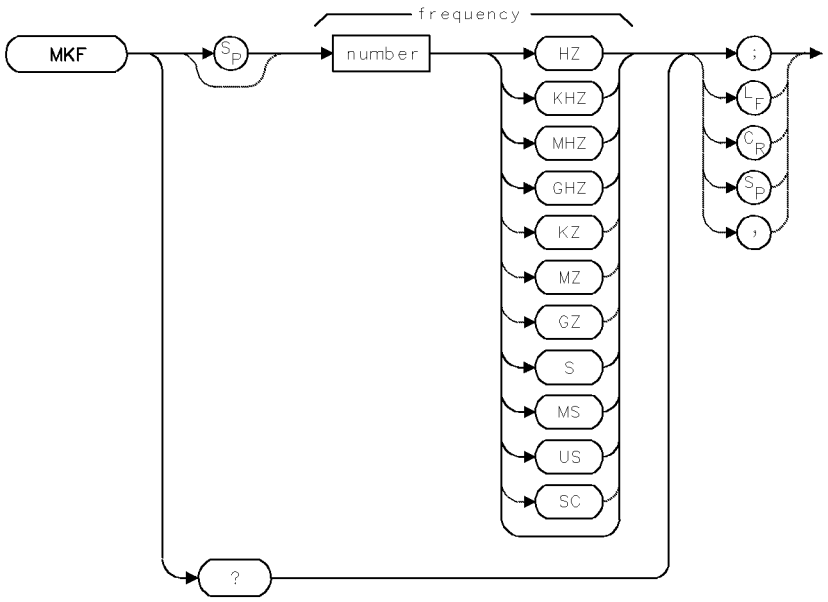


| Item | Description |
|---|---|
| Frequency Range | ± 1000 GHz |
| Interdependent Commands | SP, MKTRACE, MKREAD, or commands affecting frequency such as FOFFSET, CF, SP, LOSTART, LOSTOP, FA, FB |

## Example

Position a marker at a certain frequency on a trace.

```
40 OUTPUT 718;"FA 100MHZ;FB 1100MHZ;"    Set measurement range.
50 OUTPUT 718;"SNGLS;TS;"                 Activate single-sweep mode, then sweep
                                          trace A.
60 OUTPUT 718;"MKN;"                      Display active marker.
70 OUTPUT 718;"MKF 500MHZ;"               Position marker at 500 MHz.
80 OUTPUT 718;"MKF?;"                     Return value of marker to computer.
90 ENTER 718;N                            Assign value to computer variable.
```

For frequency spans greater than zero, the MKF command returns the frequency of the active marker, or the frequency difference between the reference and delta marker when the relative-marker mode has been activated by the MKD command. For frequency spans equal to zero, MKF returns the marker position in terms of time. As a predefined variable, MKF represents either the frequency or the time position of the active marker and can be very useful during math operations and data analysis. The marker readout and returned information varies depending on span and the marker-readout setting selected by the MKREAD command.

MKF can also be used to position the active marker on the trace in terms of time or frequency. If the active marker is not displayed, MKF places it on the trace at the specified frequency. If

the position of the marker is not specified, MKF places it at the center of the trace. If more than one trace is displayed, MKF marks the active trace, or marks trace A, B, or C, in that order; or marks the trace specified by MKTRACE.

For complete readout information, see the table at the description for the MKREAD command.

## Query Response

# MKFABS

MARKER FREQUENCY ABSOLUTE

Set the current active marker to the frequency requested, or return the current active marker frequency.

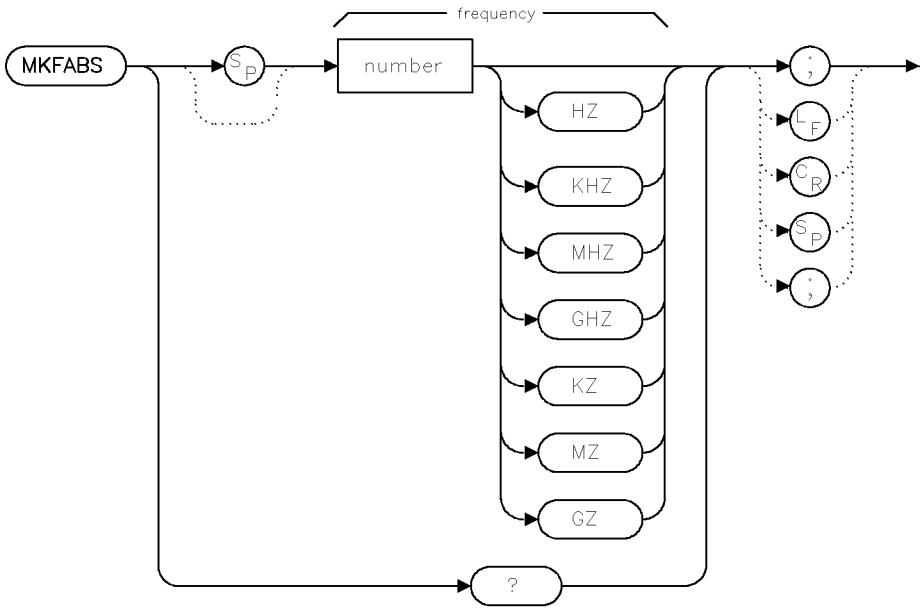


mkfabs

## Example

```
MKFABS 2.0 GZ;
MKFABS?
```

This command allows a marker to be set to an absolute frequency, whether the marker mode is delta. Normally in delta, you can only set a marker relative to the reference marker. The query will be absolute an frequency, rather than the distance from the reference marker.

If you set the marker to a frequency beyond the current start and stop frequencies, no error will occur, and the marker will be moved to the point closest to the requested frequency, but still on screen.

## Query Response

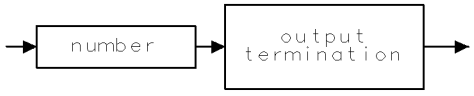


qgennum

# MKMIN

MARKER MINIMUM

Move displayed marker to lowest signal level in trace.

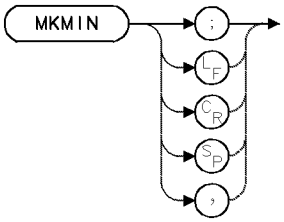


| Item | Description |
|---|---|
| Requirements | Be sure trace data reflects one complete sweep. SNGLS and TS suggested. |
| Interdependent Commands | MKPX, SMOOTH, VAVG, VB, RB, MKTRACE |

## Example

Find lowest signal level on the trace.

```
10 CLEAR 718                              Initialize analyzer.
20 OUTPUT 718;"IP;"
30 OUTPUT 718;"SNGLS;"                    Activate single-sweep mode.
40 OUTPUT 718;"FA 100MHZ;FB 1100MHZ;"     Set measurement range.
50 OUTPUT 718;"TS;"                       Sweep trace A.
60 OUTPUT 718;"MKMIN;"                    Find lowest signal level.
```

The MKMIN command moves the active marker to the minimum value detected. MKMIN operates on the displayed, active trace, or if more than one is displayed, it operates on trace A, B, or C, in that order; or on the trace specified by MKTRACE.

# MKN

MARKER NORMAL

Position active marker on trace according to frequency.

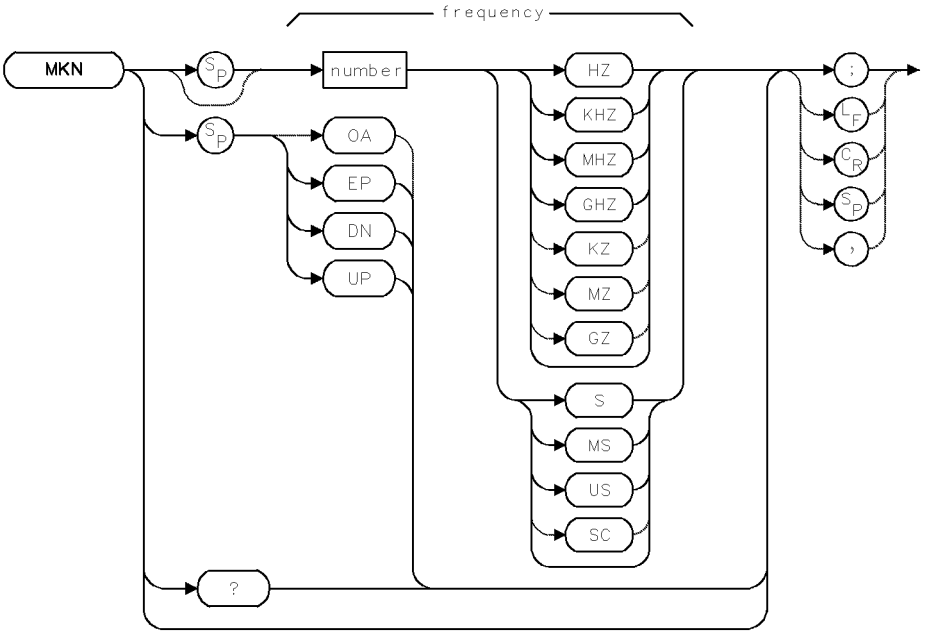


| Item | Description |
|---|---|
| Frequency Range | ± 1000 GHz |
| Requirements | Be sure trace data reflects one complete sweep. SNGLS and TS suggested. |
| Interdependent Commands | SP, MKREAD, MKACT, MKTRACE |

The MKN command places the active marker on a trace at the specified frequency or, during zero span mode, at the specified time. If the position of the marker is not specified, MKN places it at the center of the trace.

MKN also activates the **normal marker mode**, where the frequency and amplitude of the active, displayed marker is annotated in the upper-right corner of the graticule. MKN turns off all other marker functions that display marker information in other forms, including the following functions:

- MKBW
- MKAL
- MKAR
- MKD
- MKNOISE
- MKPAUSE
- MKRELPWR
- MKRINSYS

If more than one trace is displayed, MKN marks the active trace, or marks trace A, B, or C, in that order; or marks the trace specified by MKTRACE.

When MKN is turned OFF, the marker is turned off and the detector is set to normal mode.

## Example

Display active marker.

```
20 OUTPUT 718;"SNGLS;"                  Activate single-sweep mode.
30 OUTPUT 718;"FA 100MHZ;FB 1100MHZ;"   Set measurement range.
40 OUTPUT 718;"TS;"                     Sweep trace A.
50 OUTPUT 718;"MKN EP;"                 Display active marker and use the front
                                        panel controls to position it. Press ACCEPT VALUE.
60 OUTPUT 718;"MKN 500MHZ;"             Position marker at 500 MHz.
```

## Query Response

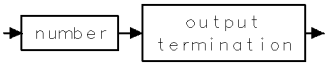

# MKNOISE

MARKER NOISE BANDWIDTH

Display or return noise bandwidth at marker.

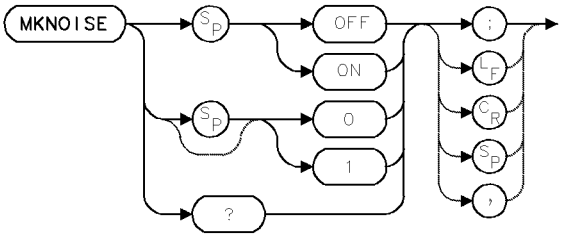


| Item | Description |
|---|---|
| Interdependent Commands | RB, VB, SMOOTH, VAVG, MKTRACE and commands that affect amplitude, such as AMPCOR, RL, MEASURE, CNVLOSS, AMPCOR |
| Preset State | MKNOISE OFF |

## Example

Calculate the rms noise level at the marker position.

```
10 CLEAR 718                    Initialize analyzer.
20 OUTPUT 718;"IP;"
30 OUTPUT 718;"MKN EP;"         Display the active marker and position it in the noise
                                using the front panel controls. Press ACCEPT VALUE.
40 OUTPUT 718;"MKNOISE ON;"     Display the rms noise level at the marker.
50 OUTPUT 718;"MKA?;"           Return the noise level to the computer.
60 ENTER 718;N                  Assign value to computer variable.
```

The MKNOISE command computes the rms noise level at the displayed, active marker. The rms value is normalized to a 1-Hz bandwidth and compensates for errors caused by the following:

- the shape of the resolution bandwidth filters
- the log amplifiers
- the difference between the rms values of the noise floor envelope (which is a broadband response described by Rayleigh's distribution function) and the true rms value of the noise floor (which is a broadband response).

If no marker is displayed, MKNOISE places the active marker at the center of the active trace. If more than one trace is active, MKNOISE operates on trace A, B, or C, in that order; or on the trace specified by MKTRACE.

## Query Response

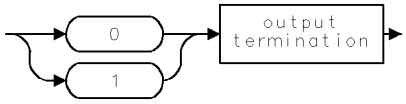

# MKOFF

MARKER OFF

Turn off markers.

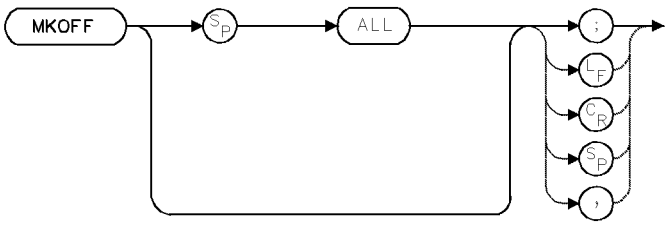


| Item | Description |
|---|---|
| Interdependent Commands | All marker functions |

## Example

Turn off all displayed active markers.

```
10 CLEAR 718                 Initialize analyzer.
20 OUTPUT 718;"IP;"
30 OUTPUT 718;"MKN;"         Display the active marker.
40 OUTPUT 718;"WAIT 4;"      Wait four seconds.
50 OUTPUT 718;"MKOFF;"       Turn off all markers.
```

Use the MKOFF command to turn off the active marker, or all markers.

`MKOFF` erases the active marker.

`MKOFF ALL` erases all markers.

MKOFF erases from internal memory the marker(s) characteristics, such as frequency, amplitude, and type.

# MKP

MARKER POSITION

Position active marker on trace in position units.

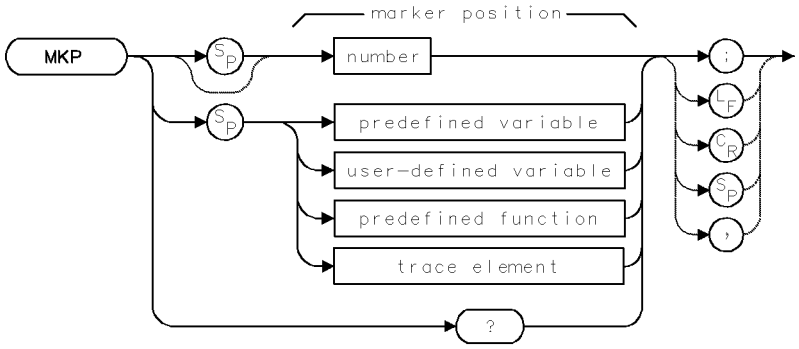


| Item | Description |
|---|---|
| Range | 1 – 1024 |
| Requirements | Be sure trace data contains one complete sweep. SNGLS and TS suggested.<br>VARDEF when using *predefined variable*. |
| Interdependent Commands | MKTRACE |

## Example

Return the position of a marker in position units.

```
10 OUTPUT 718;"MKN;"      Display the active trace.
20 OUTPUT 718;"MKP?;"     Return marker position in position units.
30 ENTER 718;N            Assign value to computer variable.
```

The MKP command positions the active marker on a trace horizontally in **position units**.

Position units describe the position of a point along the horizontal axis of a trace. The point at the left end of the trace has a position-unit value of 1. The point at the right end of a 800-point trace has a position-unit value of 800.

If more than one trace is displayed, MKP chooses the active trace, or chooses trace A, B, or C, in that order; or chooses the trace specified by MKTRACE.

## Query Response

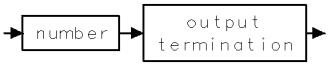

# MKPABS

MARKER POSITION ABSOLUTE

Sets the current active marker to the bucket requested even in delta marker mode.

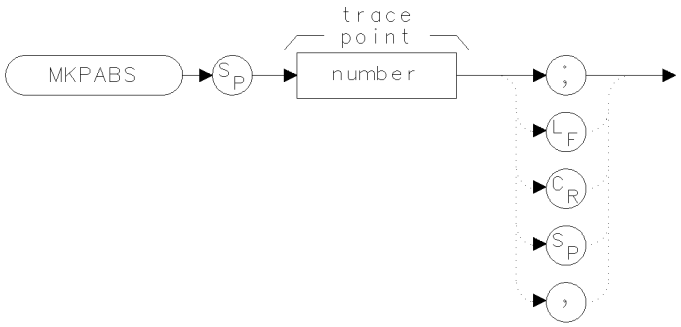


xmkpbs

| Item | Description |
|---|---|
| Range | 0 to 2047 |

## Example

```
100 OUTPUT 723;"MKPABS 431;"
```

The MKPABS command sets a marker to an absolute bucket. If the value is larger than the current trace length, the marker will be placed on the last trace point. For example, if the trace length was 800, and the value sent was 2000, no error would occur, but the marker would appear on bucket number 799, not number 2000.

If the value is set to a bucket number that is beyond what the spectrum analyzer is capable of displaying (not what it is currently displaying) a “Parameter out of range” error occurs.

The query returns the absolute trace point. Use the MKD command to set a marker relative to the reference marker.

## Query Response

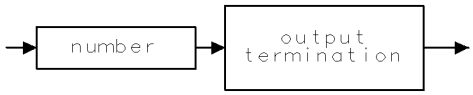


qgennum

## See Also

MKFABS

# MKPAUSE

MARKER PAUSE

Pause sweep at marker.

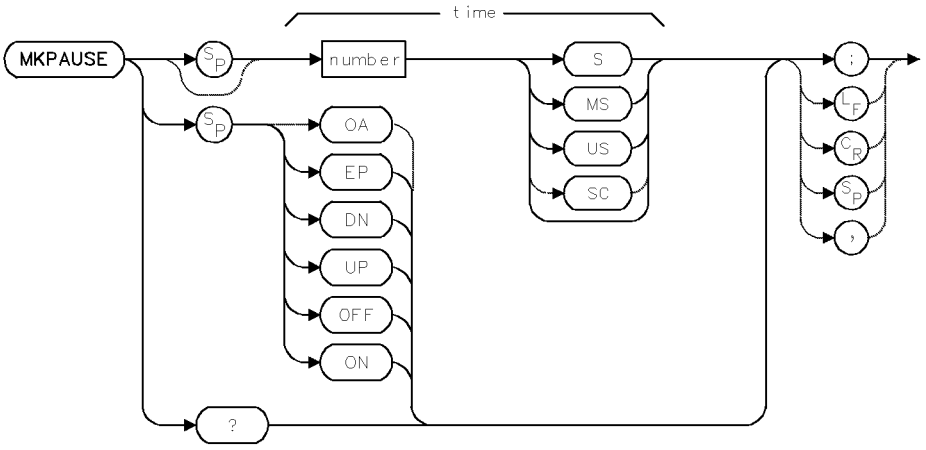


| Item | Description |
|---|---|
| Time Range | 0 – 1000 seconds |
| Step Increment | 1, 3, 10 sequence |
| Interdependent Commands | MKOFF |
| Preset State | `MKPAUSE 0` (off) |

## Example

Suspend sweep at marker position for 1.3 seconds.

```
30 OUTPUT 718;"TS;"              Sweep trace A.
40 OUTPUT 718;"MKN;"             Display active marker.
50 OUTPUT 718;"MKPAUSE 1.3S;"    Pause sweep for 1.3 seconds at marker.
```

The MKPAUSE command pauses the sweep at the displayed active marker for the specified length of time. The delay can be removed by executing `MKPAUSE 0` or by turning off the active marker with the MKOFF command. If no marker is displayed, MKPAUSE first marks the highest level of the active trace, or marks trace A, B, or C, in that order; or marks the trace specified by MKTRACE.

## Query Response

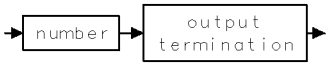

# MKPITX

MARKER PIT EXCURSION

Control the excursion value for marker pit operations.

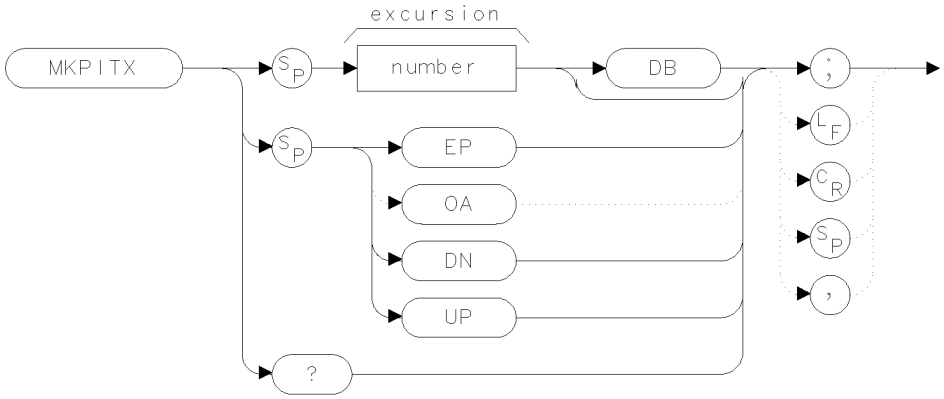


xmkpit

| Item | Description |
|---|---|
| Pit-Excursion Range | 0.01 – 300 dB |
| Step Increment | 1 scale division during log mode. 1 scale division at top graticule line (.915 dB) during linear mode. |
| Preset State | `MKPITX 3DB` |

## Example

```
100 OUTPUT 726;"MKPITX 6DB;"      Set the pit excursion value to 6dB
```

Just as MKPX sets the peak excursion value for marker peak operations, MKPITX sets the pit excursion value for marker pit operations. The MKPITX command specifies the minimum signal excursion for the marker-pit functions (MKPK). Signal movement less than the pit-excursion value is not considered a pit. To be a pit, the skirt of the signal response must dip by at least the pit-excursion value, and then rise by at least the pit-excursion value.

The default pit-excursion value is 3 dB for pits displayed on a logarithmic scale. This means that any pit with an excursion of less than 3 dB on either side of its bandwidth shape is not identified as a pit. If the marker-pit command, `MKPK MIPIT`, is executed on such a pit, the spectrum analyzer does not place a marker at the pit. For signals displayed on a linear scale, the default pit excursion equals

$$excursion = 1 - 10^{\frac{-MKPITX}{200}}$$

Note that if the pit excursion is too small, noise pits are identified as pits. Use VAVG or SMOOTH to minimize noise pits so that signal peaks can be distinguished from noise pits.

## Query Response

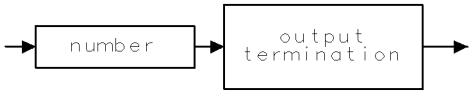


qgennum

## See Also

MKPK, MKPX

# MKPK

MARKER PEAK

Position active marker at a peak (or pit) on the trace.

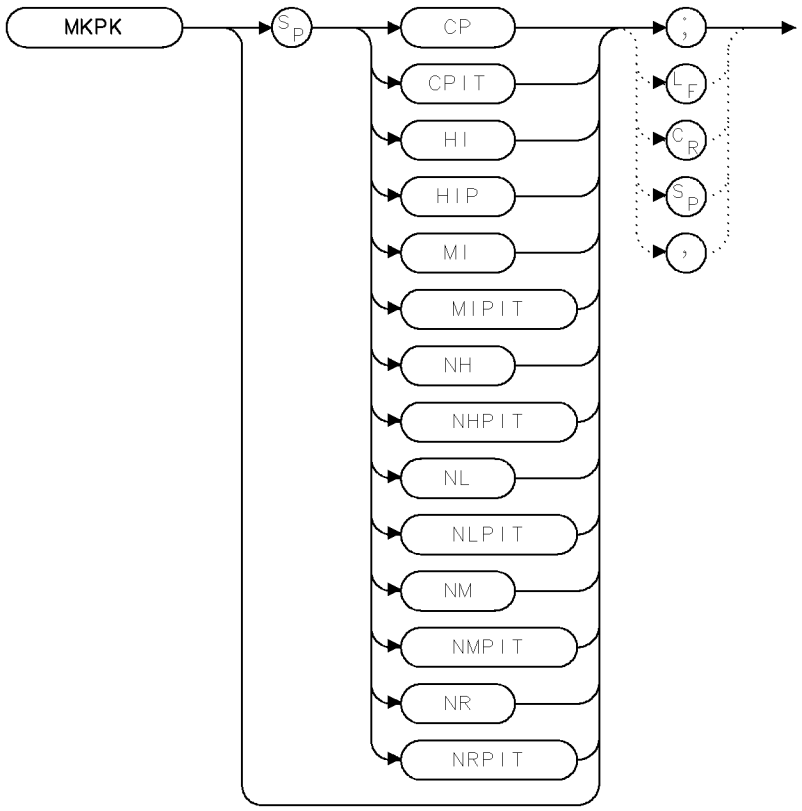


| Item | Description |
|---|---|
| Requirements | Be sure trace data reflects one complete sweep. SNGLS and TS suggested. |
| Interdependent Commands | MKPX, VAVG, SMOOTH, VB, MKTRACE |

## Example

Use the MKPK command to mark the two highest signals on the trace.

```
30 OUTPUT 718;"SNGLS;"                    Activate single-sweep mode.
40 OUTPUT 718;"FA 100MHZ;FB 1100MHZ;"     Set measurement range.
50 OUTPUT 718;"VAVG 30;"                  Conduct video averaging on 30 sweeps.
60 OUTPUT 718;"TS;"                       Sweep the measurement range. (Average
                                          over thirty sweeps.)
70 OUTPUT 718;"MKPK HI;"                  Move the active marker to the highest sig-
                                          nal level (amplitude) on the trace.
80 OUTPUT 718;"MKD;MKPK NH;"              Move the delta marker to the next highest
                                          signal level on the trace.
```

```
90 OUTPUT 718;"MKPK NR;"
```
*Move the marker to the next signal peak of higher frequency.*

The MKPK command parameters reposition the *active* marker on the trace as follows:

| Argument | Definition |
|---|---|
| CP | Moves the displayed, active marker to the closest peak. |
| CPIT | Select the closest pit. |
| HI | Moves the active marker to the highest point on the trace. |
| HIP | Move the displayed, active marker to the highest peak (as opposed to the highest point). |
| MI | Select the minimum peak (this is NOT the same as the minimum point, which is selected by MKMIN). |
| MIPIT | Select the lowest pit. A pit is an inverse peak: it consists of a local minimum point with a positive excursion on each side. |
| NH | Moves the displayed, active marker to the next highest signal level detected. |
| NHPIT | Select the next highest pit. This moves through the pits in the opposite direction of NLPIT. |
| NL | Moves the displayed, active marker to the next signal peak (to the left). |
| NLPIT | Select the next left pit. |
| NM | Select next minimum peak. Just as NH (next highest) goes to the next highest peak, this goes to the next lowest peak. |
| NMPIT | Select the next lowest pit. This would be used to move up after using MKPIT. |
| NR | Moves the displayed, active marker to the next signal peak (to the right). |
| NRPIT | Select the next right pit. |

The peak-excursion command, MKPX, determines what constitutes a peak in a trace. The pit-excursion command, MKPITX, determines what constitutes a pit in a trace.

# MKPX

MARKER PEAK EXCURSION

Select minimum signal excursion for peak signal identification.

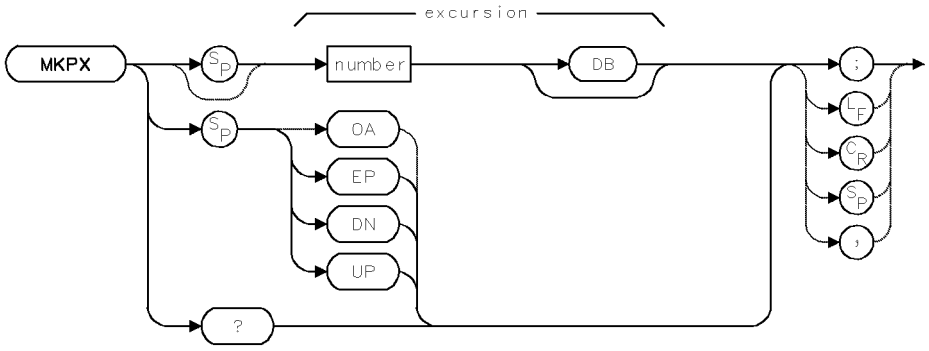


| Item | Description |
|---|---|
| Peak-Excursion Range | 0.01 – 300 dB |
| Step Increment | 1 scale division during log mode. 1 scale division at top graticule line (.915 dB) during linear mode. |
| Interdependent Commands | MKPK, SIGID, SRCTKPK, PEAKS and marker functions. |
| Preset State | MKPX 3DB |

## Example

Set the marker-peak excursion to 20 dB.

Only very large signals are recognized by the marker-peak and signal-identification functions. (This example is identical to the example for “MKPK” except that this example specifies the peak excursion rate in line 70.)

```
10 CLEAR 718                              Initialize analyzer.
20 OUTPUT 718;"IP;"
30 OUTPUT 718;"SNGLS;"                    Activate single-sweep mode.
40 OUTPUT 718;"FA 100MHZ;FB 1100MHZ;"     Set measurement range.
50 OUTPUT 718;"VAVG 30;"                  Activate video averaging.
60 OUTPUT 718;"TS;"                       Sweep measurement range; average over
                                          30 sweeps.
70 OUTPUT 718;"MKPX 20DB;"                Set peak excursion to 20 dB.
80 OUTPUT 718;"MKPK HI;"                  Mark highest point on trace.
90 OUTPUT 718;"MKD;MKPK NH;"              Move delta marker to next highest point
                                          on trace. (Operation depends on MKPX
                                          setting.)
100 OUTPUT 718;"MKPK NR;"                 Move delta marker to next peak of higher
                                          frequency. (Operation depends on MKPX
                                          setting.)
```

The MKPX command specifies the minimum signal excursion for signal identification and the marker-peak functions (MKPK).

Signal movement less than the peak-excursion value is not considered a peak. To be a peak, the skirt of the signal response must rise by at least the peak-excursion value, and then fall by at least the peak-excursion value.

The default peak-excursion value is 6 dB for signals displayed on a logarithmic scale. This means that any signal with an excursion of less than 6 dB on either side of its bandwidth shape is not identified as a signal. If the marker-peak command, `MKPK HI`, is executed on such a signal, the analyzer does not place a marker at the signal peak.

For signals displayed on a linear scale, the default peak excursion equals

$$1 - 10^{-\mathrm{MKPX}/200}$$

Note that if the peak excursion is too small, noise spikes are identified as signals. Use VAVG or SMOOTH to minimize noise spikes so that signal peaks can be distinguished from noise spikes.

## Query Response

# MKREAD

MARKER READOUT

Select terms that describe displayed or returned marker positions.

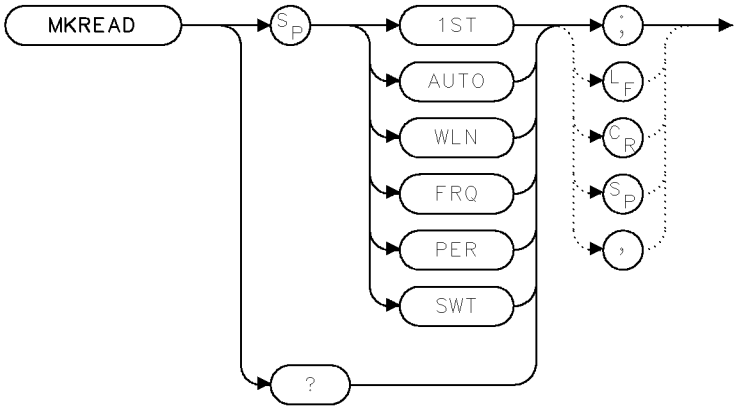


xmkred

| Item | Description |
|---|---|
| Interdependent Commands | MKN, MKD, MKAL, MKAR, MKF, MKT, MKA, SP, MEASURE |
| Preset State | MKREAD AUTO |

## Example

Change marker readout.

```
10 OUTPUT 718;"TS;MKN;"          Sweep. Activate marker.
20 OUTPUT 718;"SP 0;"            Set span to zero hertz.
30 OUTPUT 718;"MKREAD FRQ;"      Display frequency at marker position.
```

The MKREAD command selects the type of active trace information displayed by the marker readout and returned with the MKF?, MKT?, and MKA? queries. The information varies depending on whether the analyzer is in zero-span mode or sweeping a frequency range. (See table on the following page.)

## Query Response

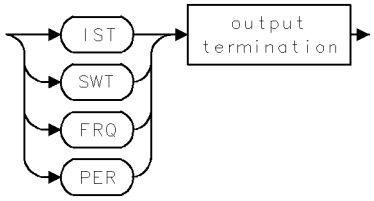

**Table 2-16. Marker Readout Information**

| Command | Contents of Marker Readout | Frequency Query (MKF?) | Time Query (MKT?) | Amplitude Query (MKA?) |
|---|---|---|---|---|
| MKREAD FRQ | Frequency at marker position | Returns frequency at marker position | Returns marker position in units of sweep time (marker sweep time) | Returns marker amplitude |
| MKREAD PER | Marker period (equals inverse of marker frequency) | Marker period (equals inverse of marker frequency) | Returns marker position in units of sweep time | Returns marker amplitude |
| MKREAD SWT | Marker position in units of sweep time | Returns marker frequency | Returns marker position in units of sweep time | Returns marker amplitude |
| MKREAD IST | Inverse of sweep time | Returns marker frequency | Returns 1/sweep-time | Returns marker amplitude |
| MKREAD AUTO | Frequency at marker position (during zero-span mode, marker position in units of sweep time) | Returns marker frequency | Returns marker position in units of sweep time | Returns marker amplitude |

# MKRELPWR

MARKER RELATIVE POWER MODE

Measure the relative amplitude of lightwave signal modulation.

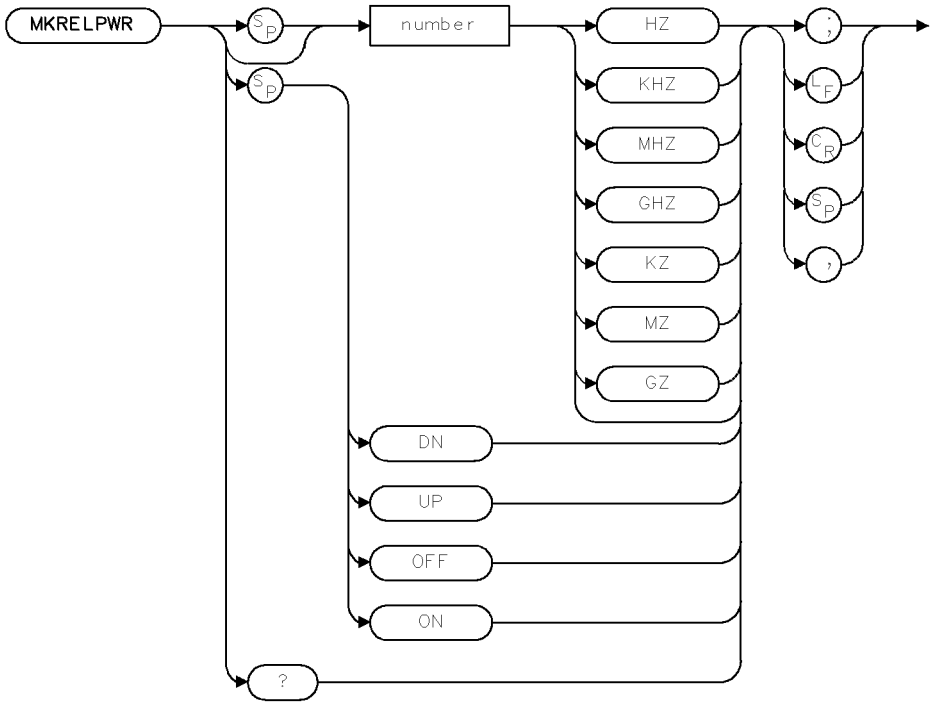


| Item | Description |
|---|---|
| Range | depends on hardware |
| Requirements | Requires a power meter in the signal path. |
| Preset State | OFF |

## Example

```
10 OUTPUT 718;"SNGLS;"
20 OUTPUT 718;"CF 300MHZ;SP 10MHZ;TS;"   Set measurement frequencies to signal
                                         vicinity.
30 OUTPUT 718;"MKN;MKPK;"                Find peak signal.
40 OUTPUT 718;"MKRELPWR ON;"             Turn on relative power marker.
50 OUTPUT 718;"MKA?;"                    Ask for marker amplitude.
60 ENTER 718;Mka                         Read marker amplitude from analyzer.
```

The MKRELPWR command calculates the delta between the power meter amplitude and the specified marker frequency by activating the REL marker and enabling the normal detector. MKRELPWR can also specify the frequency of the marker.

The marker frequency readout indicates the absolute frequency of the marker and the amplitude readout indicates the marker amplitude relative to the average power.

Relative power uses the optical power in lightwave optical mode and the electrical power in electrical mode. That is, the power value corresponding to the trace, not necessarily to the annotation, is used.

MKRELPWR can be turned off using the MKRELPWR OFF, MKN, MKOFF, or IP commands.

## Query Response

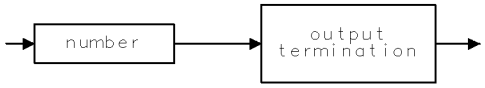


QNUM

# MKRINSYS

MARKER RELATIVE INTENSITY NOISE

Measure laser relative intensity noise.

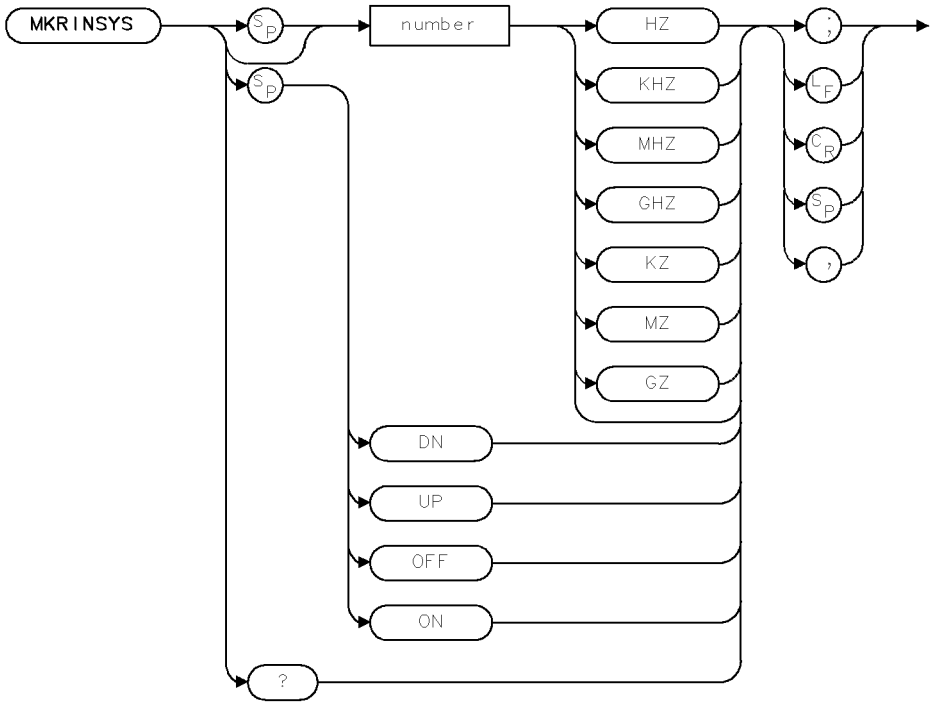


| Item | Description |
|---|---|
| Range | depends on hardware |
| Requirements | requires a power meter in the signal path. |
| Preset State | OFF |

## Example

```
10 OUTPUT 718;"SNGLS;"
20 OUTPUT 718;"CF 550MHZ;SP 10MHZ;"     Set frequency measurement range.
30 OUTPUT 718;"MKRINSYS 550MHZ;"        Turn on RIN marker.
40 OUTPUT 718;"TS;MKA?"                 Take a measurement.
50 ENTER 718;Mka                        Read measurement from analyzer.
```

The MKRINSYS command calculates relative intensity noise using the power meter amplitude and the specified marker frequency by activating the RIN marker and enabling the sample detector. The MKNOISE (marker noise) function is also activated. As a result, the marker frequency readout indicates the absolute marker frequency and the amplitude readout indicates the value of RIN at the frequency of the marker. RIN is measured relative to average optical power.

When MKRINSYS is turned off, marker noise and delta marker functions are automatically turned off.

## Query Response

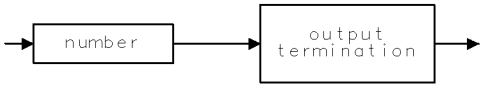


QNUM

# MKRL

MARKER TO REFERENCE LEVEL

Move marker to reference level.

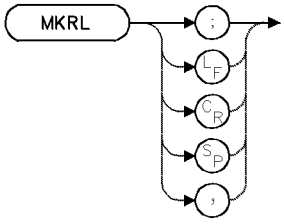


| Item | Description |
|---|---|
| Requirements | Update trace data after executing MKRL. |

## Example

Use MKRL to set the reference level equal to the marker amplitude.

```
10 CLEAR 718                              Initialize analyzer.
20 OUTPUT 718;"IP;"
30 OUTPUT 718;"SNGLS;"                    Activate single-sweep mode.
40 OUTPUT 718;"FA 100MHZ;FB 1100MHZ;"     Set measurement range.
50 OUTPUT 718;"TS;"                       Sweep trace A.
60 OUTPUT 718;"MKPK HI;"                  Place marker at highest signal.
70 OUTPUT 718;"MKRL;"                     Set reference level equal to marker amplitude.
80 OUTPUT 718;"TS;"                       Sweep new measurement range.
```

The MKRL command sets the reference level equal to the amplitude of the displayed active marker. The effect is to “move” the marker to the reference level.

If the active marker is a relative type that has been activated by the MKD, MKAL, or MKAR commands, an error condition occurs.

# MKSP

MARKER SPAN

Set span equal to frequency difference of markers.

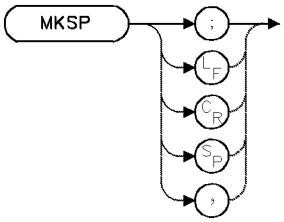


| Item | Description |
|---|---|
| Interdependent Commands | Update trace data after executing MKSP. |
| Restrictions | MKSP is inoperative after MKAL or MKAR is executed. |

## Example

Use markers to set the start and stop frequencies.

```
30 OUTPUT 718;"SNGLS;"                  Activate single-sweep mode.
40 OUTPUT 718;"FA 200MHZ;FB 1100MHZ;"   Set measurement range.
50 OUTPUT 718;"VAVG 20;"                Activate video averaging.
60 OUTPUT 718;"TS;"                     Sweep, averaging over 20 sweeps.
70 OUTPUT 718;"MKN;MKPK HI;"            Mark the highest point on the trace.
80 OUTPUT 718;"MKD;"                    Activate the delta marker.
90 OUTPUT 718;"MKPK NH;"                Move the delta marker to the second high-
                                        est peak.
100 OUTPUT 718;"VAVG OFF;"              Turn off video averaging.
110 OUTPUT 718;"CONTS;"                 Activate continuous sweeping.
120 OUTPUT 718;"MKSP;"                  Set the span equal to the frequency differ-
                                        ence between the markers.
130 OUTPUT 718;"MKOFF;"                 Turn off the markers.
```

The MKSP command operates during the **relative-marker mode** only. If MKD has been executed, MKSP sets the start and stop frequencies equal to the frequencies of the **delta marker** and **reference marker**. The start and stop frequencies correspond to the markers on the left and right, respectively. See MKD, MKAL, and MKAR.

# MKSS

MARKER TO CENTER FREQUENCY STEP SIZE

Set center-frequency step size equal to the marker frequency or the frequency difference between the markers.

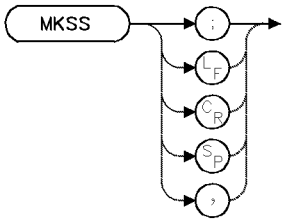


| Item | Description |
|---|---|
| Restrictions | MKSS is inoperative when executed after MKAL or MKAR. |
| Interdependent Commands | SS |

## Example

Use the MKSS command to make harmonic distortion measurements.

```
10 CLEAR 718                              Initialize analyzer.
20 OUTPUT 718;"IP;"
30 OUTPUT 718;"FA 100MHZ;FB 1100MHZ;"     Set measurement range.
40 OUTPUT 718;"VB 1KHZ;"                  Set video bandwidth.
50 OUTPUT 718;"MKN EP;"                   Move marker to fundamental, using front
                                          panel knob, then press ACCEPT VALUE key.
60 OUTPUT 718;"MKCF;"                     Move the marked signal to the center of the
                                          display.
70 OUTPUT 718;"MKSS;"                     Set the center-frequency step size equal to
                                          the marker frequency (fundamental).
80 OUTPUT 718;"CF UP;"                    Change the center frequency using the step
                                          keys. Notice that the center frequency is set
                                          successively to the harmonics of the signal.
```

The MKSS command uses marker information to specify the center-frequency step size. (See SS.)

MKSS sets the center-frequency step size equal to the frequency of the active, *displayed* marker during normal marker mode. When the relative marker mode has been activated with the MKD command, MKSS sets the step size equal to the frequency difference of the delta and reference markers. MKSS cannot be used after MKAR or MKAL has been executed.

# MKSTOP

MARKER STOP

End the sweep at the current active marker.

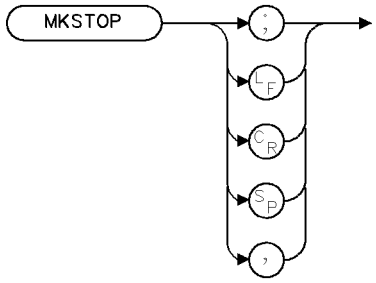


XMKSTP

| Item | Description |
|---|---|
| Interdependent Commands | MKCONT, MKN |

## Example

```
10 OUTPUT 718;"MKSTOP;"
```

The MKSTOP command ends the sweep at the current active marker instead of at the end of the trace when in continuous sweep mode. Sweep time can be saved by not sweeping past the marker. The next sweep will start the trace over.

# MKT

MARKER TIME

Position marker in units of time.

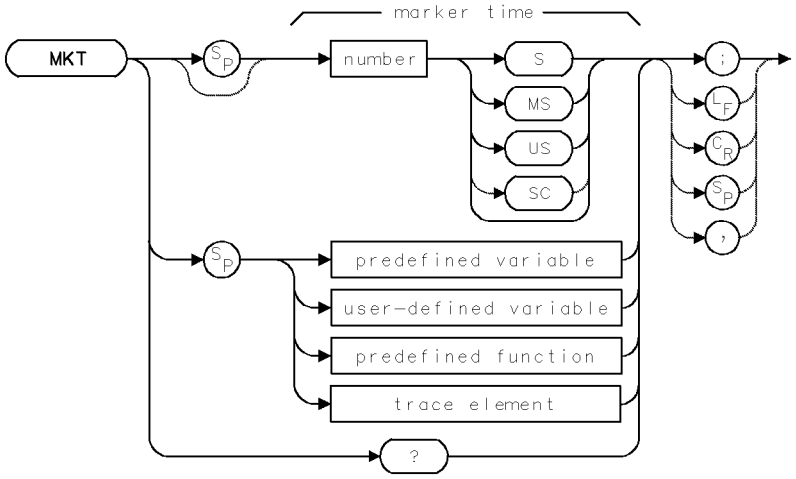


| Item | Description |
|---|---|
| Marker-Time Range | ± 1000 seconds |
| Step Increment | 1 major horizontal scale division. |
| Interdependent Commands | MKREAD, SP |

## Example

Calculate the position of the marker in units of time.

```
10 CLEAR 718                 Initialize analyzer.
20 OUTPUT 718;"IP;"
30 OUTPUT 718;"SP 0;TS;"     Set measurement range to zero span. Measure.
40 OUTPUT 718;"MKN;"         Display active marker.
50 OUTPUT 718;"MKT?;"        Return value of the marker position, in units of time.
60 ENTER 718;N               Assign value to computer variable.
```

Use the MKT command during zero span mode. `MKT?` returns the marker position in units of time, unless `MKREAD IST` has been executed, when `MKT?` returns the marker position as an inverse of the sweep time at the marker. As a predefined variable, MKT represents either the frequency or the time position of the active marker and can be very useful during math operations and data analysis.

MKT can also position the displayed, active marker on a trace in units of time, relative to the left end of the trace. If the marker is a delta marker, the time is figured relative to the reference marker. For complete readout information, see the table at the MKREAD command description.

## Query Response

# MKTRACE

MARKER TRACE

Move marker to another trace.

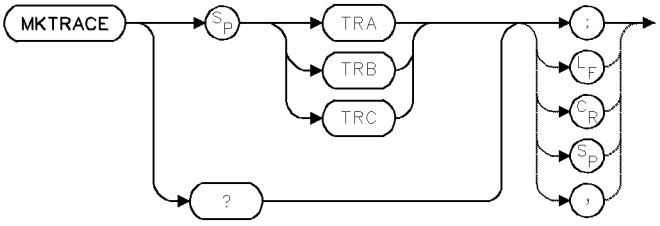


| Item | Description |
|---|---|
| Interdependent Commands | MKA, MKAL, MKAR, MKD, MKF, MKMIN, MKN, MKNOISE, MKP, MKPAUSE, MKPK |
| Preset State | `MKTRACE TRA` |

## Example

Move markers from trace to trace.

```
30 OUTPUT 718;"SP 1MHZ;CF 300MHZ;"     Set measurement range.
40 OUTPUT 718;"TS;VIEW TRA;"           Sweep trace A, then store it.
50 OUTPUT 718;"RL 10DBM;"              Set reference level.
60 OUTPUT 718;"CLRW TRB;TS;"           Measure with trace B.
70 OUTPUT 718;"MKN 300.2MHZ;"          Position a marker on the trace.
80 PAUSE                               Press CONTINUE on computer keyboard.
90 OUTPUT 718;"MKTRACE TRA;"           Move the marker to trace A.
```

The MKTRACE command moves the displayed, active marker to a corresponding position on the specified trace.

## Query Response

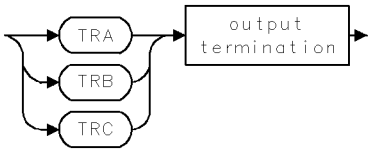

# MKTRACK

MARKER TRACKING

Maintain marked signal at center frequency.

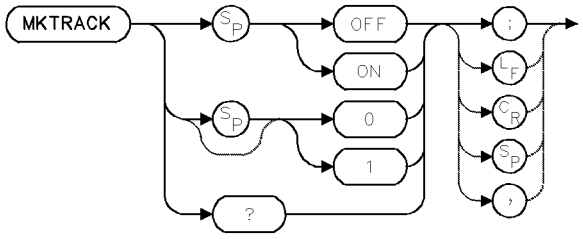


| Item | Description |
|---|---|
| Interdependent Commands | MKTV, SP |
| Preset State | MKTRACK OFF |

## Example

Use the marker-tracking function to maintaining a signal at the center of the display while changing the span.

(Connect calibrator signal to analyzer input.)

```
30 OUTPUT 718;"FA 100MHZ;FB 1100MHZ;"     Set measurement range.
40 OUTPUT 718;"TS;MKPK HI;"               Sweep trace A. Place the active marker at
                                          the highest signal peak.
50 OUTPUT 718;"MKTRACK ON;"               Turn on marker tracking.
60 OUTPUT 718;"SP 10KHZ;"                 Change the span.
70 OUTPUT 718;"MKTRACK OFF;"              Turn off marker tracking.
```

The MKTRACK command keeps the active marker and the point it marks at the center of the display during frequency span changes. When `MKTRACK ON` is executed, the spectrum analyzer initiates several sweeps as it reduces the span in stages. If span is reduced significantly when marker tracking is off, the signal is likely to be outside of the measurement range. See MKTV and ZOOMRB.

## Query Response

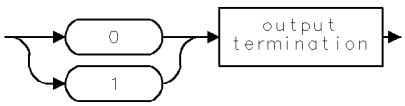

# MKTV

MARKER TRACKING VARIANCE

Specify amplitude variance monitored by marker-tracking function.

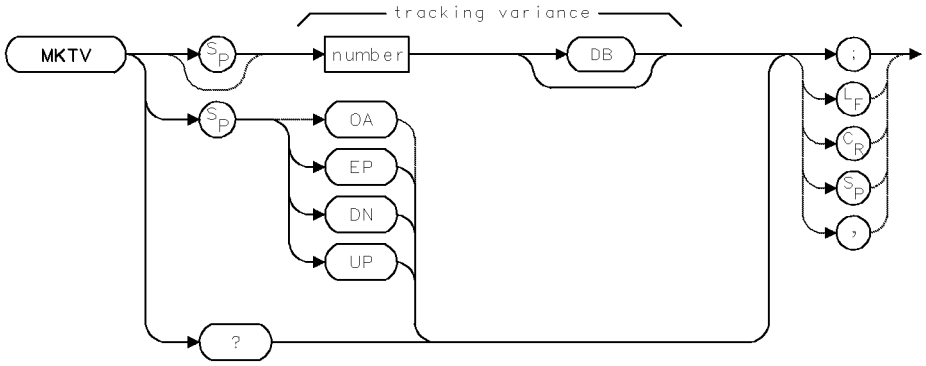


| Item | Description |
|---|---|
| Tracking-Variance Range | 0 – 300 dB |
| Step Increment | 1 major vertical scale division during log mode. 1 major vertical scale division at top graticule line (.915 dBm) during linear mode. |
| Interdependent Commands | MKTRACK |
| Preset State | MKTV 5DB |

## Example

Change the marker-tracking variance.

```
30 OUTPUT 718;"FA 100MHZ;FB 1100MHZ;"    Set measurement range.
40 OUTPUT 718;"TS;MKPK HI;"               Sweep trace A. Place the active marker on
                                          the highest signal peak.
50 OUTPUT 718;"MKTV 1DB;"                 Change marker-tracking variance to 1 dB.
60 OUTPUT 718;"MKTRACK ON;"               Turn on marker tracking.
70 OUTPUT 718;"SP 10KHZ;"                 Change the span.
```

The MKTV command specifies the amplitude variance monitored by the marker-tracking function (MKTRACK) to determine the proper signal to track. With each sweep, the marker-tracking function verifies that the marker is kept on the same signal by comparing the amplitude of the currently marked signal to the amplitude of the signal marked during the previous sweep. If the two amplitudes are not within the tracking-variance limit, the marker is moved to an adjacent signal and amplitudes are recompared.

Reduce the marker-tracking variance when tracking a signal that has an amplitude close to the level of the other signals in the measurement range.

## Query Response

# MKTYPE

MARKER TYPE

Return marker type: position, delta, amplitude-left, or amplitude-right.

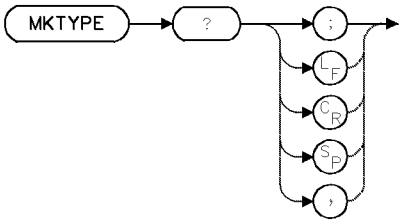


## Example

Return marker type.

```
30 OUTPUT 718;"MKN;"          Activate normal marker.
40 OUTPUT 718;"MKTYPE?;"      Return marker type to computer.
50 ENTER 718;A$               Assign response to computer variable.
```

The MKTYPE returns the type of the active marker. Four types are available, called **position marker** (normal), **delta marker**, **amplitude-left marker**, and **amplitude-right marker**.

The position marker (*PSN*) is activated by MKN and is positioned at any point on the trace meeting the frequency or time criteria. MKPK, MKPAUSE, MKTRACK, and MKNOISE also activate the position marker.

The delta marker (*DELTA*) is activated by MKD and is positioned at a point, either side of the **reference marker**, that meets the frequency or time criteria.

The amplitude-right marker (*AMPR*) is activated by MKAR and is positioned to the right of marker #1 at the first point that meets the amplitude criteria.

The amplitude-left marker (*AMPL*) is activated by MKAL and is positioned to the left of marker #1 at the first point that meets the amplitude criteria.

See *HP 70000 Modular Spectrum Analyzer Operating Manual* "Marker Functions" in the Softkey Reference chapter. See also **relative-marker mode** and **normal marker mode** in the Glossary.

## Query Response

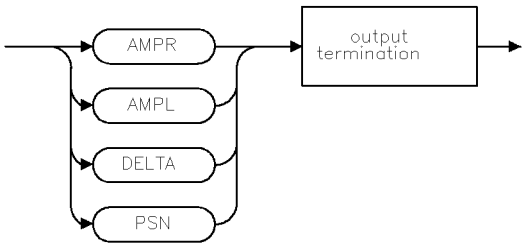


QMTYPE

# ML

MIXER LEVEL

Monitor maximum input level to mixer.

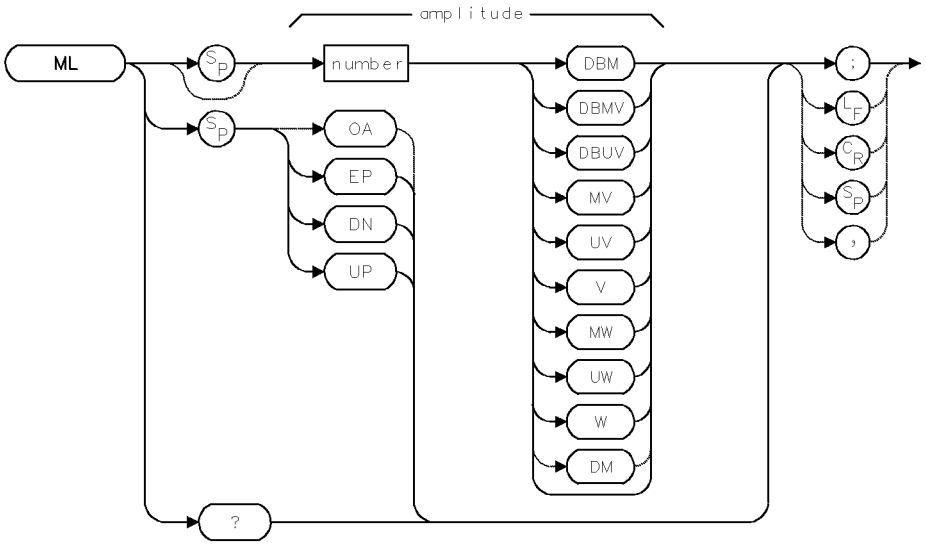


| Item | Description |
|---|---|
| Interdependent Commands | ML, AT, and other amplitude commands, such as ROFFSET. |
| Coupling | Reference level (RL) is coupled to ML. |
| Preset State | `ML -10DBM;` |

## Example

Set the mixer level.

```
10 OUTPUT 718;"ML 20DBM;"      Set maximum mixer level to 20 dBm.
20 OUTPUT 718;"ML EP;"         Change maximum mixer level using front panel controls,
                               then press ACCEPT VALUE key.
30 OUTPUT 718;"ML?;"           Return mixer-level value.
40 ENTER 718;N                 Assign value to computer variable.
```

The ML command works in conjunction with the maximum-input-level command, MIL, to control the reference level (IF gain) and input attenuation so that any displayed signals whose peaks are below the top graticule line (reference level), or a dashed line if it is present, have levels that do not exceed the selected maximum input level and are not affected significantly by gain compression.

The MIL command specifies a value for the maximum *expected* signal level to the *spectrum analyzer* input. The ML command specifies the *maximum* signal level at the *mixer* input.

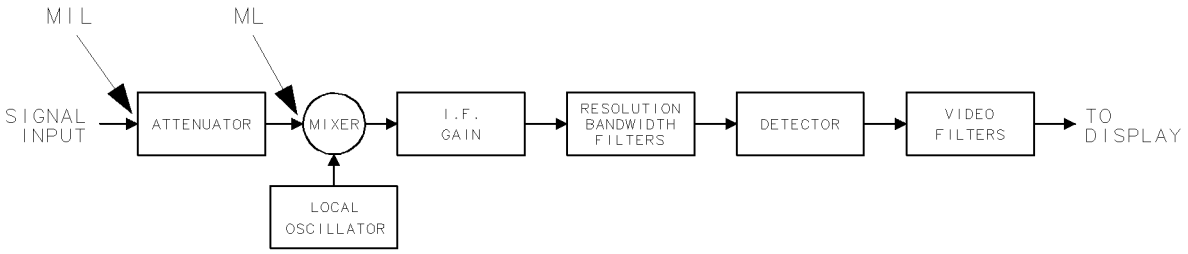


**Figure 2-6.**

The mixer-level setting is reset to −10 dBm when the analyzer is turned on or when instrument preset (IP) is executed. To improve amplitude accuracy or increase dynamic range, decrease the mixer-level setting to any value within 70 dB of the maximum input setting (MIL).

Excessive signal levels to the mixer can limit the dynamic measurement range by producing spurious, false responses on the analyzer display. Likewise, excessive levels can also cause gain compression which affects amplitude accuracy.

Because the AMPCOR command adjusts IF gain and/or attenuation to compensate for unwanted loss or gain at the spectrum analyzer input, ML should be used with caution when measuring signals that are near the compression level and are at a frequency that is corrected by the AMPCOR command.

See *HP 70000 Series modular spectrum analyzer system Operation Manual*, "Gain Compression and Maximum Input Levels" in the "Amplitude Functions" section in the "Softkey Reference" chapter.

## Query Response

# MOD

MODULO

Retain remainder after division.

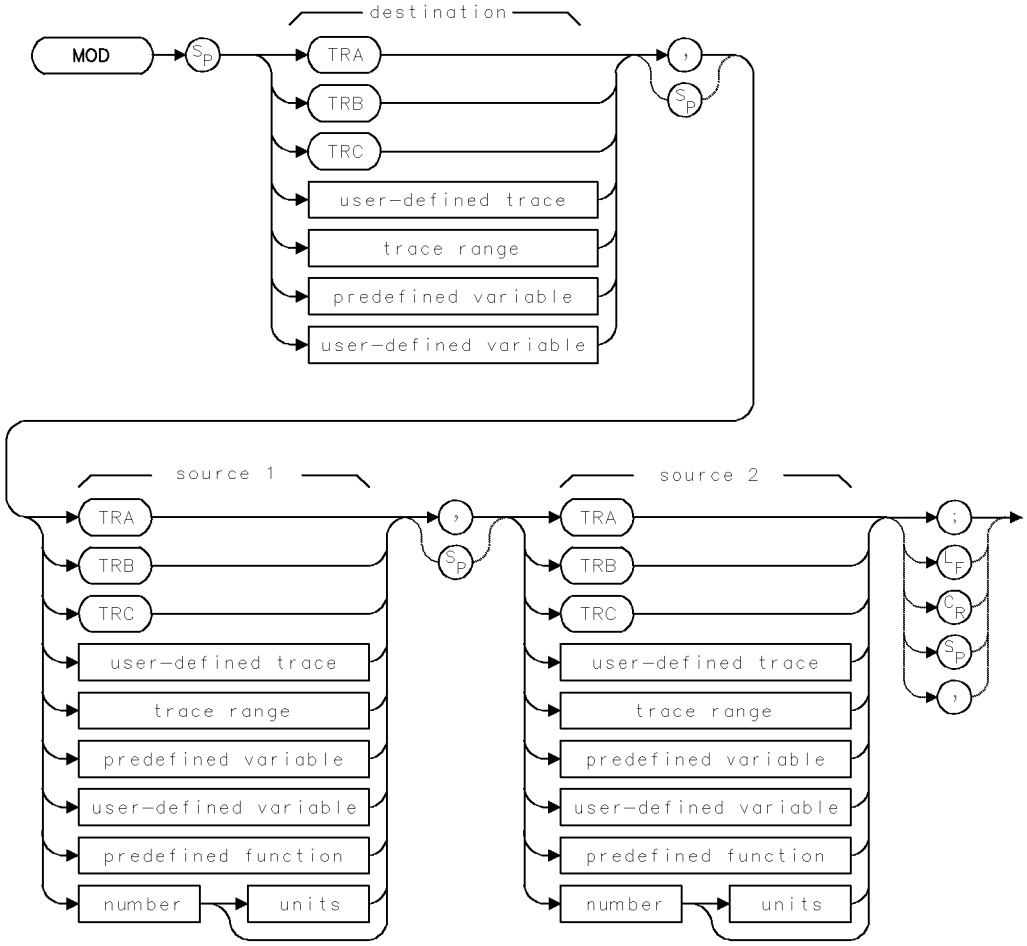

| Item | Description |
|---|---|
| Source or Destination Amplitude Range | 0 – 10,000 measurement units for linear trace data in *TRA*, *TRB*, *TRC*, *trace range*, or *user-defined trace*. –32,768 – +32,767 measurement units for logarithmic trace data in *TRA*, *TRB*, *TRC*, *trace range*, or *user-defined trace*. $\pm 1.8 \times 10^{308}$ when using *number*, *predefined variable* or *user-defined variable*. Zero not allowed for source 2. |
| Source-Length Range | 1 – 1024 position units. Default is 800 position units when using *TRA*, *TRB*, *TRC*. Truncated if longer than destination length. If shorter than destination length, last element is extended for operation. |
| Destination-Length Range | 1 – 1024 position units. |
| Requirements | Be sure data reflects one complete sweep when using *TRA*, *TRB*, *TRC*, or *trace range* for source. SNGLS and TS suggested. TRDEF required when using *user-defined trace*. VARDEF required when using *user-defined variable*. |

## Example

Set the measurement range to the remainder of the center frequency divided by 1 GHz.

```
10 CLEAR 718                        Initialize analyzer.
20 OUTPUT 718;"IP;"
30 OUTPUT 718;"MOD SP,CF,1GHZ;"     Set span equal to remainder of center frequency
                                    divided by 1 GHz.
40 OUTPUT 718;"TS;"                 Sweep new measurement range.
```

The MOD command stores in the destination the remainder left by the division of source 1 by source 2. Source 2 cannot be equal to 0, or an error results.

# MODADD

MODULE ADDRESS

Return HP-MSIB address of module.

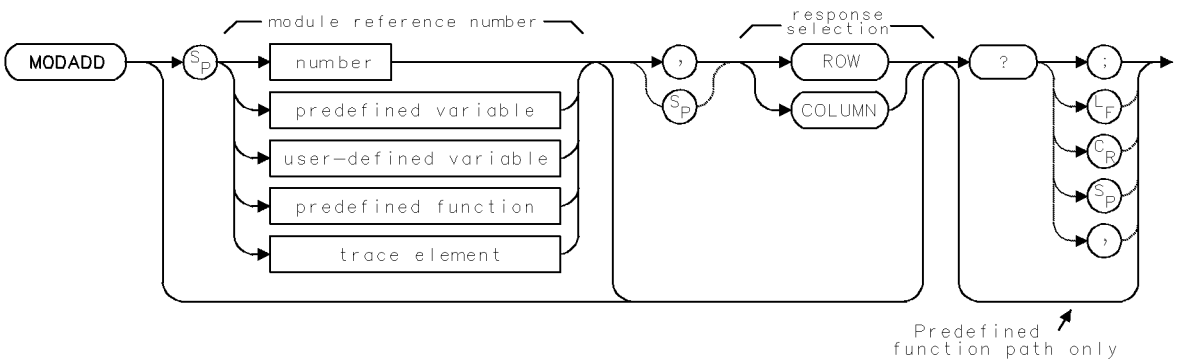


| Item | Description |
|---|---|
| Reference-Number Range | 1 to hardware limit |
| Interdependent Commands | INPUT, PINPUT |

## Example

Use the MODADD and INPUTMOD commands to learn the HP-MSIB address of the RF Section module in a system containing the following modules:

- HP 70600 Preselector
- HP 70905 RF Section
- HP 70902 IF Section
- HP 70900 Local Oscillator

First, determine the input port number of the RF Section. Press `MENU`, `State`, select input. The input number is on each of the input-activating keys. Next, use the INPUTMOD command to determine the reference number corresponding to the RF Section input-port number (2):

```
10 OUTPUT 718;"INPUTMOD 2?;"
```
*Return the reference number of the module (RF Section) at input port 2.*

```
20 ENTER 718;R
```
*Assign reference number to R.*

```
30 OUTPUT 718;"MODADD",R;"?;"
```
*Return the row and column number of the module with reference number "R" (at input port 2).*

```
40 ENTER 718;N,M
```
*Assign the row number to N. Assign the column number to M.*

## Example

Use the MODADD command to return the HP-MSIB addresses of all modules in a system that contains:

- Local-oscillator module
- IF-section module
- RF-section module
- Preselector module

```
30 OUTPUT 718;"MODADD?;"        Return HP-MSIB address of all modules.
40 ENTER 718;N,M,O,P,Q,R,S,T    Assign row and column addresses to computer variables.
```

The MODADD command returns the HP-MSIB address of the specified module. The HP-MSIB address corresponds to a module position in the **address map**. If the *row* or *column* parameter is included, MODADD only returns the HP-MSIB row or column address. See PINPUT and INPUTMOD.

## Predfined-Function Syntax

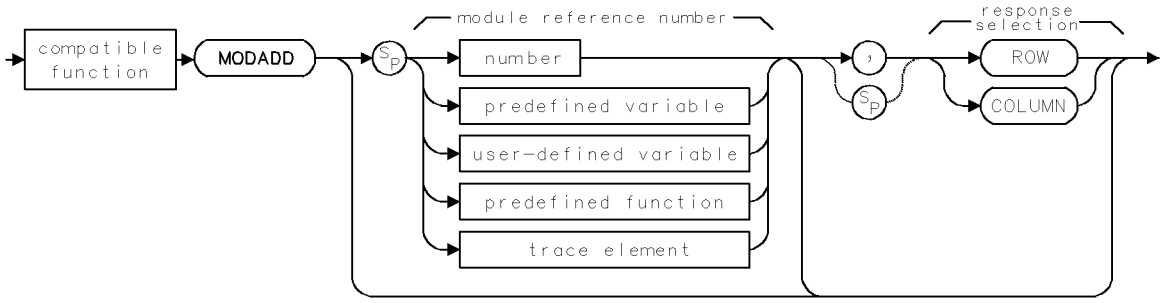


## Query Syntax

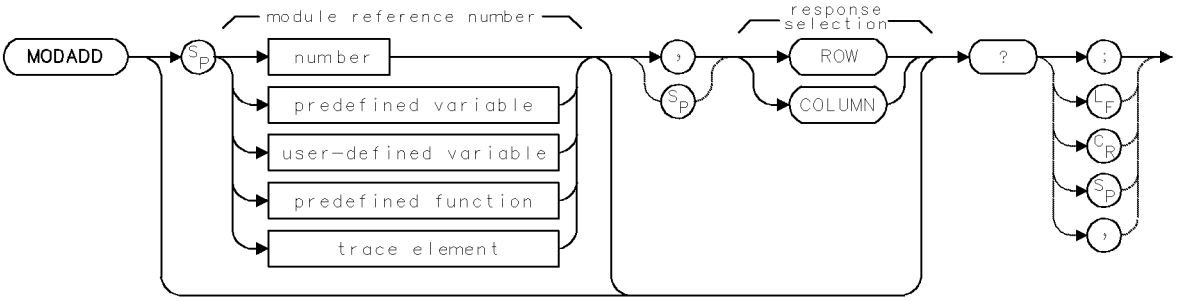

## Query Response if Row or Column is Returned

## Query Response if Complete HP-MSIB Addresses are Returned

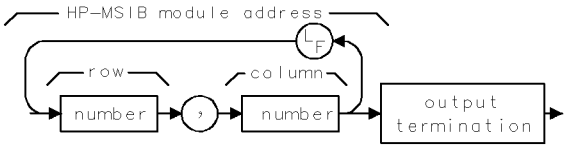

# MODID

MODULE IDENTIFICATION

Identify module or instrument at HP-MSIB address.

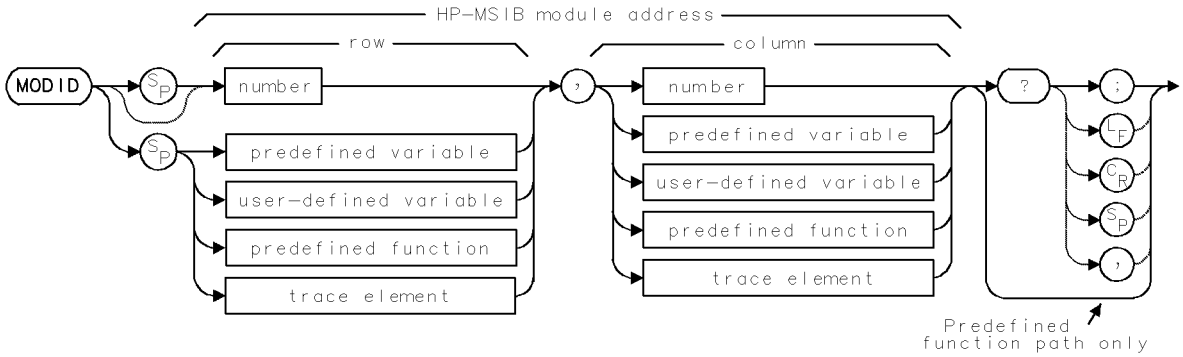


| Item | Description |
|---|---|
| Row Range | Integers, 0 – 7 |
| Column Range | Integers, 0 – 31 |
| Requirements | VARDEF required when using *user-defined variable*. |
| Restrictions | `MODID 0,31` is illegal |

## Example

Use MODID to determine which module is at a specified HP-MSIB address.

```
50 OUTPUT 718;"MODID M_OD,18?;"
```
*Return model number of module at HP-MSIB address M_OD,18 (row=M_OD, column=18).*

```
60 ENTER 718;N
```
*Assign model number to N.*

```
70 OUTPUT 718;"M_OD?;"
```
*Return value of M_OD, which is the row number.*

```
80 ENTER 718;M
```
*Assign row number to computer variable.*

```
90 PRINT "THE";N;" MODULE IS IN ROW";M;",COLUMN 18"
```

The MODID command identifies the modular spectrum analyzer module or instrument located at the specified HP-MSIB address.

MODID must be used as either a query or as a source in another analyzer-command function. Form a query by ending the MODID statement with a question mark (?). When used as a query, MODID returns the model number of the module at the specified HP-MSIB address.

Use MODID as a source by incorporating the MODID statement into the source of any spectrum analyzer command that contains *predefined function* in its syntax diagram. When MODID is used as a source, the HP-MSIB address of the specified module is used for operation by the command that contains MODID.

## Predefined-Function Syntax

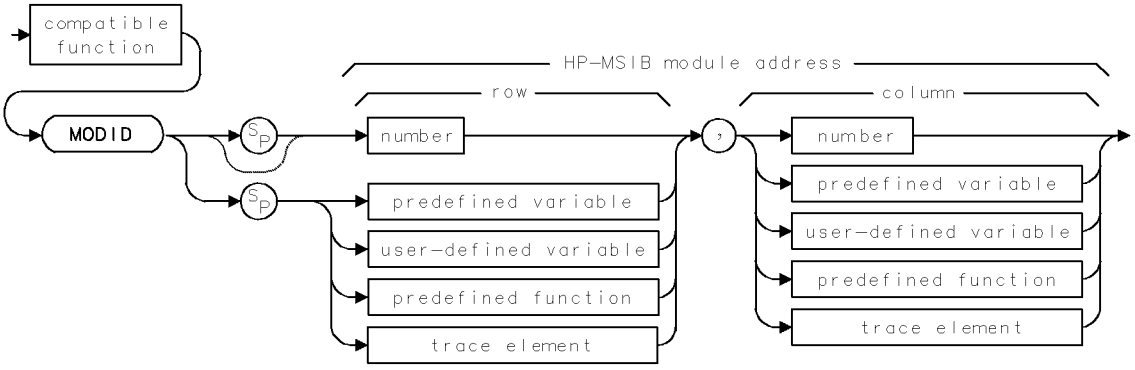


## Query Syntax

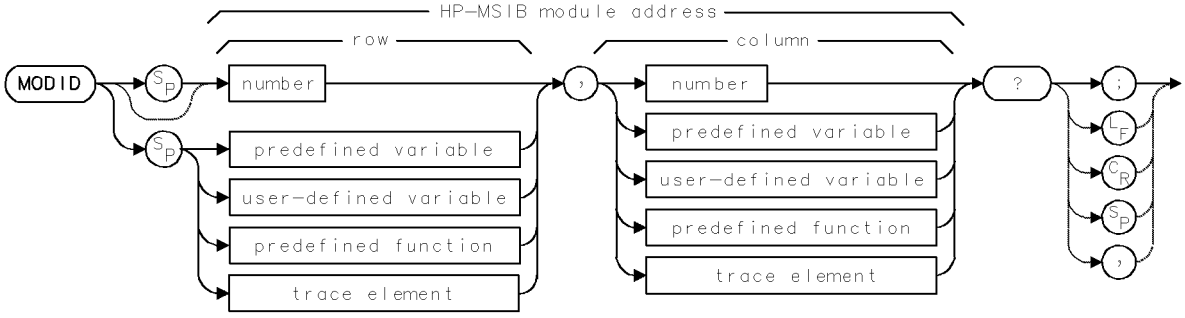


## Query Response

The model number less any alpha-character prefix or suffix is returned. If no module is present or the address is not within the local oscillator control area (slave area), a 0 is returned. Alpha characters are converted as follows:

| | |
|---|---|
| A becomes .0 | F becomes .5 |
| B becomes .1 | T becomes .6 |
| C becomes .2 | H becomes .7 |
| D becomes .3 | I becomes .8 |
| E becomes .4 | J becomes .9 |

# MOV

MOVE

Transfer copy of trace, variable, or number value(s) to a trace or variable.

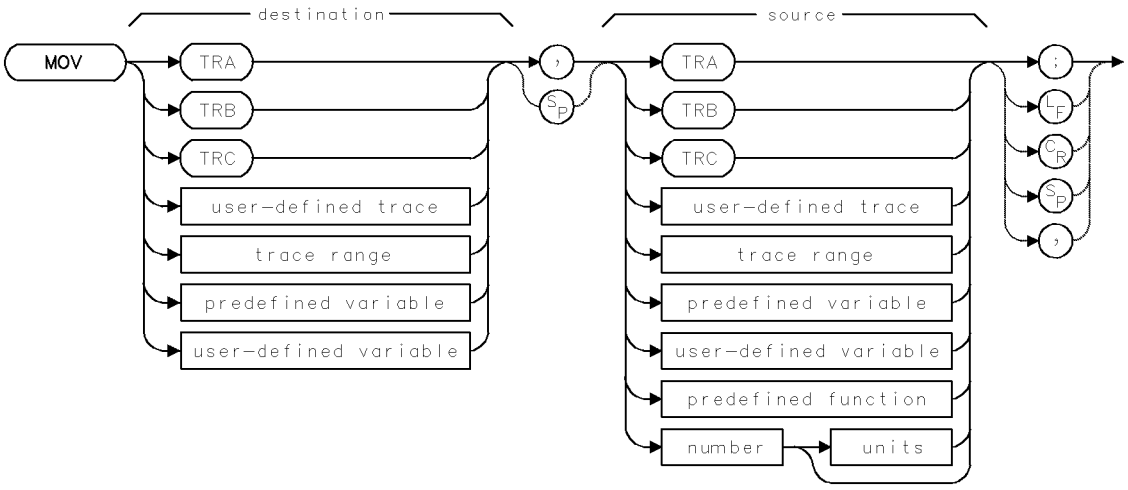


| Item | Description |
|---|---|
| Source-Length Range | 1 – 1024 position units. Default is 800 position units when using *TRA*, *TRB*, *TRC*. Truncated if longer than destination length. If shorter than destination length, last element is extended for operation. |
| Destination-Length Range | 1 – 1024 position units. |
| Requirements | Be sure data reflects one complete sweep when using *TRA*, *TRB*, *TRC*, or *trace range* for source. SNGLS and TS suggested. TRDEF required when using *user-defined trace*. VARDEF required when using *user-defined variable*. |

## Example

Position the peak of a signal at the display line.

```
20 OUTPUT 718;"SNGLS;"                  Activate single-sweep mode.
30 OUTPUT 718;"FA 100MHZ;FB 1100MHZ;"   Set measurement range.
40 OUTPUT 718;"TS;MKPK HI;"             Sweep trace A. Place a marker at the
                                        highest signal level detected.
50 OUTPUT 718;"DL ON;"                  Turn on the display line.
60 OUTPUT 718;"MOV DL,MKA;"             Set the display-line value equal to the
                                        marker amplitude by storing the value of
                                        the marker-amplitude variable, MKA, in
                                        the display-line variable, DL.
```

The MOV command stores the contents of the source in the destination.

# MPY

MULTIPLY

Multiply.

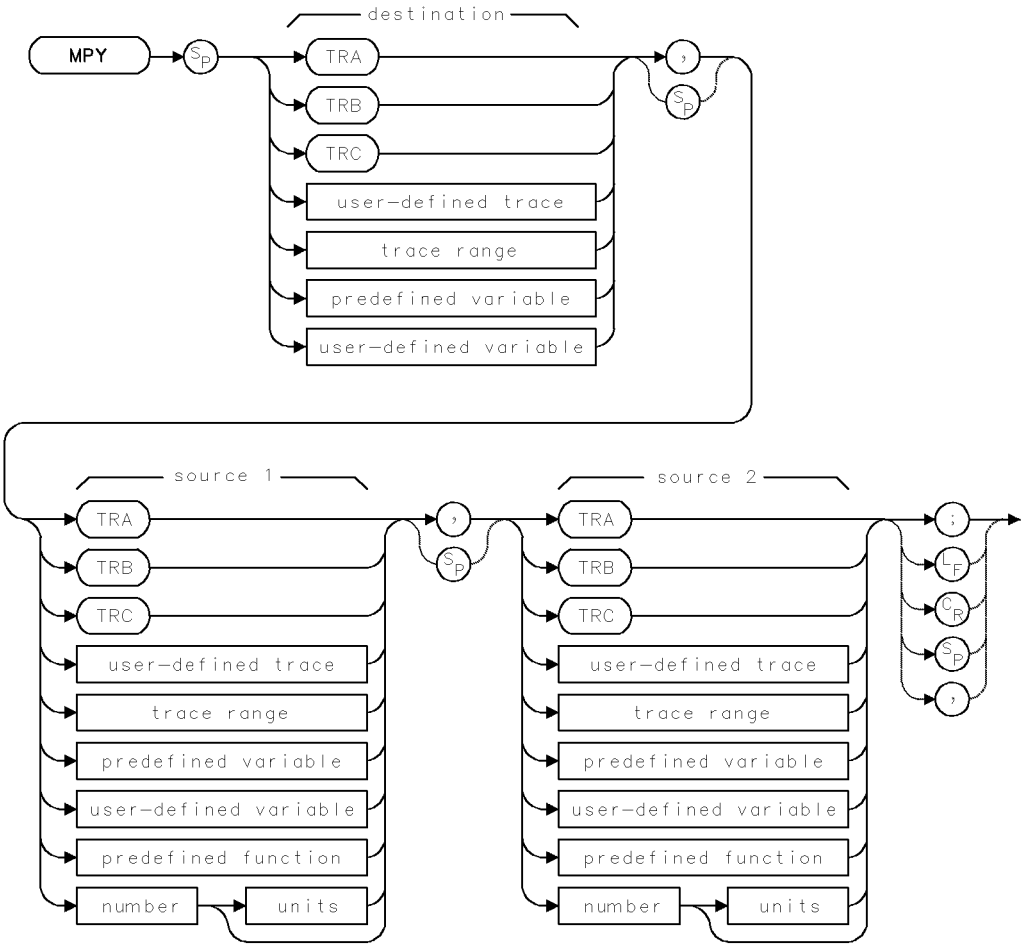

| Item | Description |
|---|---|
| Source or Destination Amplitude Range | 0 – 10,000 measurement units for linear trace data in *TRA*, *TRB*, *TRC*, *trace range*, or *user-defined trace*. –32,768 – +32,767 measurement units for logarithmic trace data in *TRA*, *TRB*, *TRC*, *trace range*, or *user-defined trace*. $\pm$ $1.8 \times 10^{308}$ when using *number*, *predefined variable*, or *user-defined variable*. |
| Source-Length Range | 1 – 1024 position units. Default is 800 position units when using *TRA*, *TRB*, *TRC*. Truncated if longer than destination length. If shorter than destination length, last element is extended for operation. |
| Destination-Length Range | 1 – 1024 position units. |
| Requirements | Be sure data reflects one complete sweep when using *TRA*, *TRB*, *TRC*, or *trace range* for source. SNGLS and TS suggested. TRDEF required when using *user-defined trace*. VARDEF required when using *user-defined variable*. |

## Example

Multiply the center frequency by 2.

```
10 CLEAR 718                    Initialize analyzer.
20 OUTPUT 718;"IP;"
30 OUTPUT 718;"MPY CF,CF,2;"    Double the center frequency.
```

The MPY command multiplies the sources, point by point, and stores the contents in the destination.

In case of overflow, an error is reported and the result is limited to the amplitude range.

# MSG

MESSAGE

Return characters contained in message area on spectrum analyzer display.

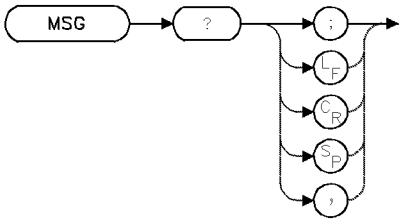


| Item | Description |
|---|---|
| Interdependent Commands | USERMSG |

## Example

Return the message shown on the analyzer display.

```
40 OUTPUT 718;"MSG?;"                    Return the message to the computer.
50 ALLOCATE Message$[40]                 Create computer array (string) for storage
                                         of character message.
60 ENTER 718 USING "-K";Cal,Cor,Msg$     Assign the messages to two Boolean vari-
                                         ables and one string. (The HP BASIC code
                                         for image, -K, enters line feeds into the
                                         string.)
70 PRINT
80 IF Cal THEN PRINT "uncalibrated"
90 IF Cor THEN PRINT "uncorrected"
100 PRINT Msg$[3]                        print the string, beginning with the third
                                         character.
```

The MSG command returns the characters shown in the message area on the analyzer display, and also returns the UNCAL and UNCOR messages if they are displayed. Whenever a message is in the message area, or “UNCAL” or “UNCOR” is displayed, the MESSAGE bit of the status-byte is set true.

## Query Response

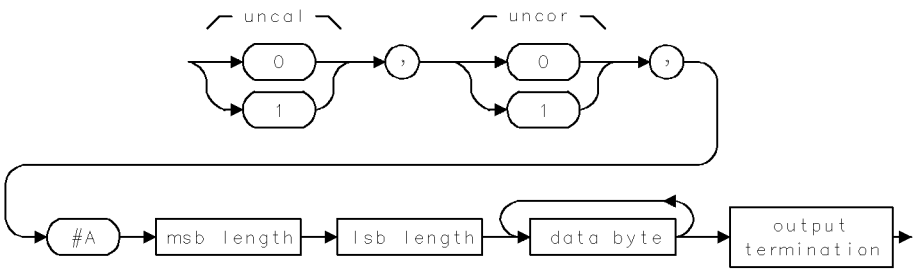

# MSI

MASS STORAGE INTERFACE

Select location for storing files: HP-IB device, HP-MSIB device, or **internal memory**.

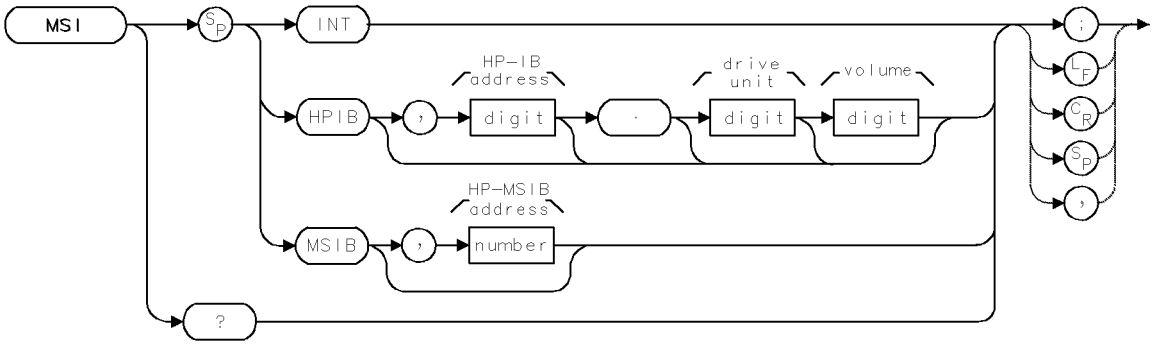


| Item | Description |
|---|---|
| HP-IB Address Range | 0 – 7 |
| Drive-Unit Range | 0 – 9 |
| Volume Range | 0 – 9 |
| HP-MSIB Address Range | 0 – 231 |
| Interdependent Commands | FORMAT, LIMIRCL, LIMISAV, LOAD, PREFX, PURGE, RCLD, RCLS, RCLT, RCLU, STOR, SAVED, SAVES, SAVET, SAVEU. |

The MSI command selects the user-memory location. When power is applied to the spectrum analyzer, internal memory is selected. The IP command does not change the MSI selection.

INT selects internal memory.

HPIB selects external memory that is located on HP-IB, such as a disk drive. Connect the device to the spectrum analyzer HP-IB port before executing MSI. The MSI command indicates the HP-IB address of the device, and for disk drives, indicates the unit and volume number. The default selection is HP-IB address 0, unit 0, volume 0 (`MSI HPIB,0.00`).

MSIB selects external memory that is located on the HP-MSIB, such as a memory card. The MSI command indicates the HP-MSIB address of the device. The default address is the HP-MSIB address of the display (for example, the HP 70004) connected to the spectrum analyzer. New addresses must be specifed as a single number. Since most storing devices are at row-address 0, the number that MSI specifies is the column address. If you wish to store on a device that is not at row zero, calculate the HP-MSIB address as follows:

HP-MSIB address = column address + row address × 32 Use the MODADD command to get the HP-MSIB address of a device, or look it up on the address map.

## Query Response

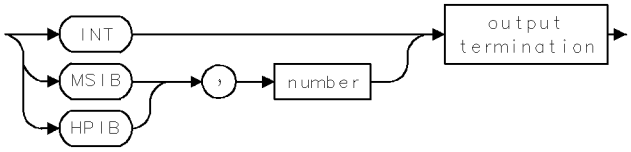

# MXM

MAXIMUM

Compare value(s), then retain the larger one(s).

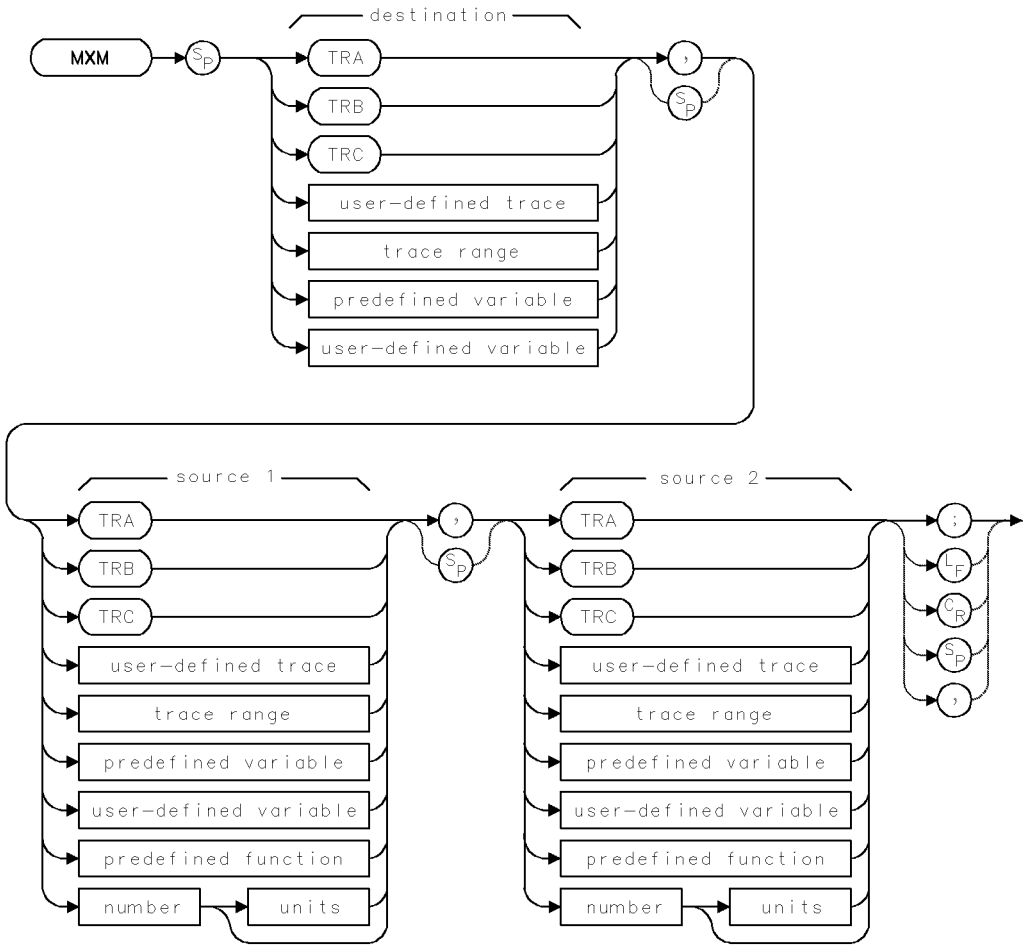

| Item | Description |
|---|---|
| Source or Destination Amplitude Range | 0 – 10,000 measurement units for linear trace data in *TRA*, *TRB*, *TRC*, *trace range*, or *user-defined trace*. −32,768 – +32,767 measurement units for logarithmic trace data in *TRA*, *TRB*, *TRC*, *trace range*, or *user-defined trace*. $\pm 1.8 \times 10^{308}$ when using *number*, *predefined variable*, or *user-defined variable*. |
| Source-Length Range | 1 – 1024 position units. Default is 800 position units when using *TRA*, *TRB*, *TRC*. Truncated if longer than destination length. If shorter than destination length, last element is extended for operation. |
| Destination-Length Range | 1 – 1024 position units. |
| Requirements | Be sure data reflects one complete sweep when using *TRA*, *TRB*, *TRC*, or *trace range* for source. SNGLS and TS suggested. TRDEF required when using *user-defined trace*. VARDEF required when using *user-defined variable*. |

## Example

Set the display-line level equal to the larger amplitude of two trace elements.

```
20 CLEAR 718                                          Initialize analyzer.
30 OUTPUT 718;"IP;"
40 OUTPUT 718;"SNGLS;"                                Activate single-sweep mode.
50 OUTPUT 718;"SP 2KHZ;CF 300MHZ;"                    Set measurement range.
60 OUTPUT 718;"RB 300HZ;"                             Set resolution bandwidth.
70 OUTPUT 718;"TS;"                                   Sweep measurement range.
80 OUTPUT 718;"DL ON;"                                Turn on the display line.
90 OUTPUT 718;"MXM DL,AMPU TRA[1],AMPU TRA[400];"     Compare the amplitude of
                                                      the first and four-hundredth
                                                      elements of trace A, then set
                                                      the display line equal to the
                                                      larger one.
```

The MXM command compares the sources, point by point, sending the greater value of each comparison to the destination.

If one of the sources is a single value, it acts as a threshold and all values greater than the threshold are sent to the destination.

# MXMH

MAXIMUM HOLD

Compare current trace data with previously detected data, then retain the larger values.

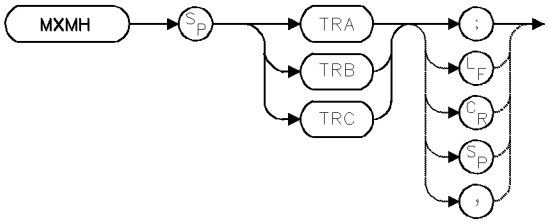


| Item | Description |
|---|---|
| Interdependent Commands | DET, TRPST |
| Preset State | Inactive |

## Example

Retain the maximum values detected in trace A.

```
10 CLEAR 718                          Initialize analyzer.
20 OUTPUT 718;"IP;"
30 OUTPUT 718;"CF 300MHZ;SP 1MHZ;"    Set measurement range.
40 OUTPUT 718;"MXMH TRA;"             Write data into trace A. The value of the
                                      incoming data is compared with the current
                                      data, then the maximum of the two is placed
                                      in trace A.
```

The MXMH command compares the current amplitude value of each point on a trace to each corresponding value detected during the previous sweep, then retains the maximum values. MXMH also activates positive peak detection. See DET.

# NORM

NORMALIZE

Controls trace normalization for stimulus-response measurements.

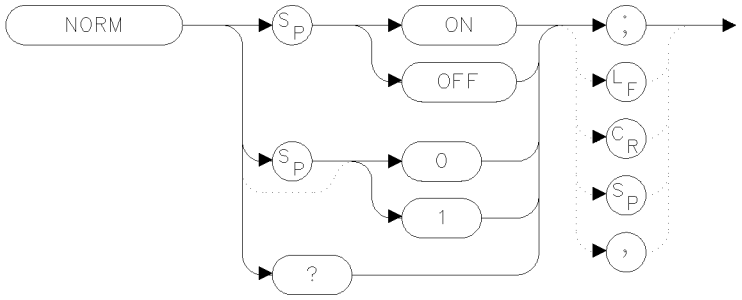


xnorm

## Example

```
100 OUTPUT 723;"NORM ON;"
```

The NORM command turns on trace normalization. When trace normalization is turned on, its operation depends on whether a logarithmic or linear display is selected. With logarithmic displays, AMB ON is executed, and the reference level is set to 0 dB. With linear displays, the reference level offset and display line are set to place the current reference trace at the top of the screen and set it equal to a value of 1.000X. Next, the ADBTL trace math function is turned on. This normalizes the current trace to 1.000X.

Turning off trace normalization simply disables the trace math enabled when NORM ON was executed. Note that turning off normalization in linear mode does not reset ROFFSET or DL to their previous values.

## Query Response

The query response value depends on the state of the NORM and MEASURE commands as shown in the following table:

**NORM Query Response**

| MEASURE State | Query Response | |
|---|---|---|
| | NORM OFF | NORM ON |
| **SA** | 0 | 0 |
| **SR** | 0 | 1 |
| **SRMILCPL** | 0 | 1 |

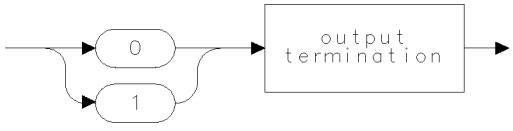


qgen0

## See Also

MEASURE, SRINPUT

# NSTART

HARMONIC START

Select lowest tested harmonic for image-identification routine.

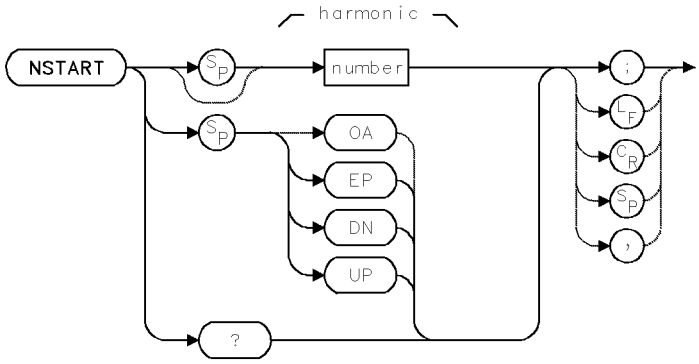


| Item | Description |
|---|---|
| Range | 1 – 100 |
| Step Increment | 1 |
| Interdependent Commands | SIGID IMAGE, IDMODE |
| Preset State | `NSTART 1` |

## Example

Reduce time lapse to identify signals with SIGID when externally mixing.

```
30 OUTPUT 718;"NSTART 12;"   Set the start harmonic number to 12.
40 OUTPUT 718;"NSTART?;"     Return harmonic number to computer.
50 ENTER 718;N               Assign value to computer variable.
```

During external-mixer applications, use the NSTART and NSTOP commands to speed signal identification when the shift method is used (`IDMODE SHIFT`). The NSTART command specifies the local oscillator harmonic that determines the start frequency used during the signal identification routines as follows:

$$F_s = N \times F_{LO} \pm F_{IF}$$

where

$F_s$ equals frequency of signals tested
N equals local oscillator harmonic
$F_{LO}$ equals local oscillator fundamental
$F_{IF}$ equals the IF frequency, 321.4 MHz.

NSTART sets the lower limit of harmonic numbers that are tested during signal identification routines and is applicable during the image identification method only. See IDMODE.

## Query Response

# NSTATE

NUMBER OF STATE REGISTERS

Set number of state-register files available for information storage.

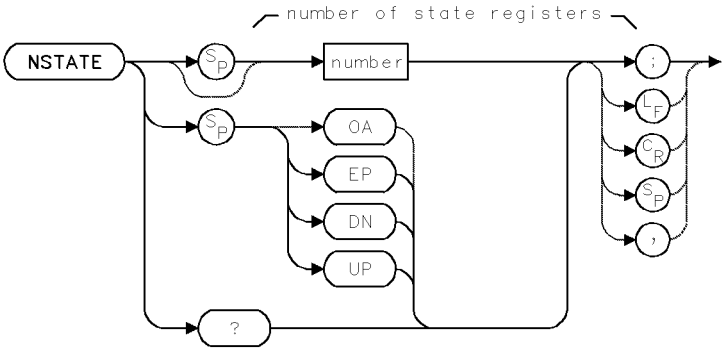


| Item | Description |
|---|---|
| Number Range | 0 to value limited by available memory, or maximum of 20. |
| Requirements | Requires user memory to increase number of state registers. See Appendix D for commands that consume memory. To select storage location (HP-IB device, HP-MSIB device, or internal memory), execute MSI before executing NSTATE. Internal memory is the storage device when power is applied to the spectrum analyzer.) |
| Interdependent Commands | PSTATE |

## Example

Use NSTATE and PSTATE to discard the contents of protected state registers.

```
10 OUTPUT 718;"PSTATE OFF;"     Deactivate state-register protection.
20 OUTPUT 718;"NSTATE 0;"       Specify 0 registers, erasing contents of all registers.
```

The NSTATE command can allocate **user memory** for the storage of state-register files. Once information is stored in a file, it can be recalled even if the analyzer has lost power.

When the number of state-register files is decreased, the higher numbered files are deleted and their contents are lost. Since state-register files occupy large amounts of **user memory**, conserve memory space by limiting their number.

Use the PSTATE command to protect state registers against accidental disposal with the NSTATE, STOR, or SAVES command.

**Note** PSTATE does not prevent erasure with the ERASE or PURGE command.

The number of state-register files is not affected by instrument preset (IP) or power loss. However, the ERASE command sets the number of files to two after erasing the contents of internal memory.

**NSTATE**

The last-state register, controlled by the POWERON command, does not form a state-register file, and thus is not affected by the NSTATE command. (The last-state register saves the state of the spectrum analyzer before power is removed, depending on the setting of the POWERON function.)

See POWERON, SAVES, and PSTATE.

## Query Response

# NSTOP

HARMONIC STOP

Select highest harmonic tested during signal identification.

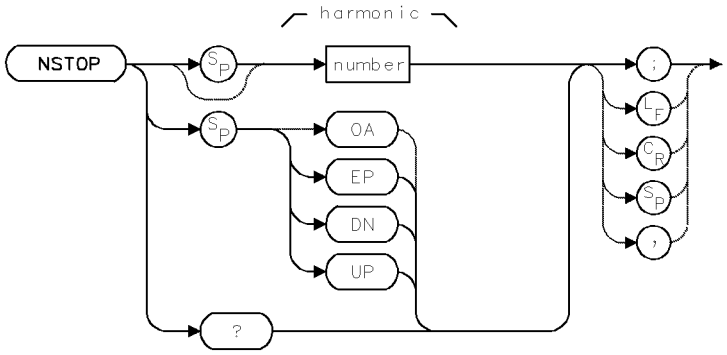


| Item | Description |
|---|---|
| Range | 1 – 100 |
| Step Increment | 1 |
| Interdependent Commands | SIGID IMAGE, IDMODE |
| Preset State | `NSTOP 40` |

## Example

Speed up signal identification.

```
30 OUTPUT 718;"NSTOP EP;"      Set the stop harmonic number using the front panel
                               controls. Select a value, then press ACCEPT VALUE.
40 OUTPUT 718;"NSTOP?;"        Return harmonic number to computer.
50 ENTER 718;N                 Assign value to computer variable.
```

Use the NSTART and NSTOP commands to speed signal identification when the image method is used (`SIGID IMAGE`) during external-mixing applications. The NSTOP command specifies the local oscillator harmonic which determines the stop frequency used during the signal identification routines as follows:

$$F_s = N \times F_{LO} \pm F_{IF}$$

where

$F_s$ equals frequency of signals tested
N equals local oscillator harmonic
$F_{LO}$ equals local oscillator fundamental
$F_{IF}$ equals the IF frequency, 321.4 MHz

NSTOP sets the upper limit of harmonic numbers that are tested during signal identification routines. See IDMODE.

## Query Response

# ONEOS

ON END OF SWEEP

Define list of functions executed at the end of the sweep.

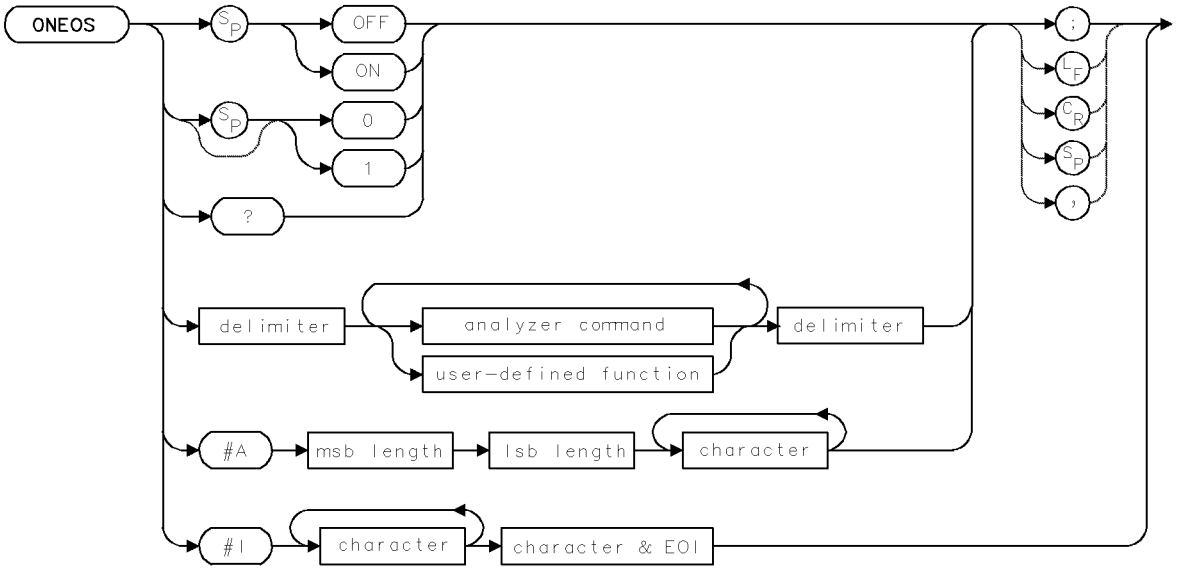


| Item | Description |
|---|---|
| Requirements | Requires internal memory. See Appendix D for commands that consume memory. Requires FUNCDEF when using *user-defined function*. |
| Interdependent Commands | PAUSE, DEBUG, ABORT, RETURN, DISPOSE, FORMAT, PROTECT and sweep-controlling commands, such as TS, SNGLS, CONTS, TM, VTL, VTH |
| Preset State | `ONEOS OFF` |

## Example

Automatically measure a new frequency range with each sweep.

```
140 OUTPUT 718;"VARDEF I,0;"          Define user-defined variable equal to 0.
150 OUTPUT 718;"VARDEF F,3E8;"        Define user-defined variable equal to 3 ×10 to
                                      the eighth power (300 MHz).
160 OUTPUT 718;"ONEOS^";              Begin definition of on-end-of-sweep algorithm.
                                      The following algorithm measures a higher
                                      harmonic of the calibration frequency with
                                      each sweep.
170 OUTPUT 718;"MOV SP,1E6;";         Set span to 1 MHz.
180 OUTPUT 718;"IF I,LT,9;THEN;";     If I is less than 9, set I equal to I + 1. Otherwise,
                                      set I equal to 1.
190 OUTPUT 718;"ADD I,I,1;ELSE;MOV I,1;ENDIF;";
200 OUTPUT 718;"MPY CF,F,I;";         Set the center frequency equal
                                      to F × I.
```

```
210 OUTPUT 718;"^;"
```
*End on-end-of-sweep algorithm.*

The ONEOS command executes the algorithm in the data field when the sweep, trace processing, and other internal end-of-sweep functions are completed.

The ONEOS algorithm is user-defined and consists of other analyzer commands, much like the user-defined functions created with the FUNCDEF command. The algorithm is stored in internal memory. Each time the sweep is completed, the algorithm is executed.

The end-of-sweep status bit in the status-byte is not set until the on-end-of-sweep algorithm is completed.

`DISPOSE ONEOS` and `FORMAT` deletes the on-end-of-sweep algorithm from internal memory.

`ONEOS ON` or `ONEOS 1` activates the algorithm.

`ONEOS OFF`, `ONEOS 0`, or `IP` deactivates the algorithm. (Executing CLEAR 718 also deactivates the algorithm.)

`ONEOS?` returns the algorithm definition to the computer.

In the syntax diagram, the delimiters mark the beginning and end of the algorithm.

See PROTECT and DISPOSE.

## Query Response

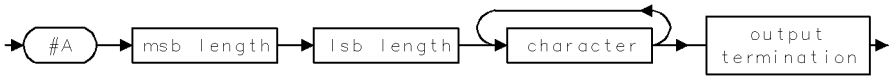

# ONMENU

ON MENU KEYPRESS

Define list of functions executed when (MENU) is pressed.

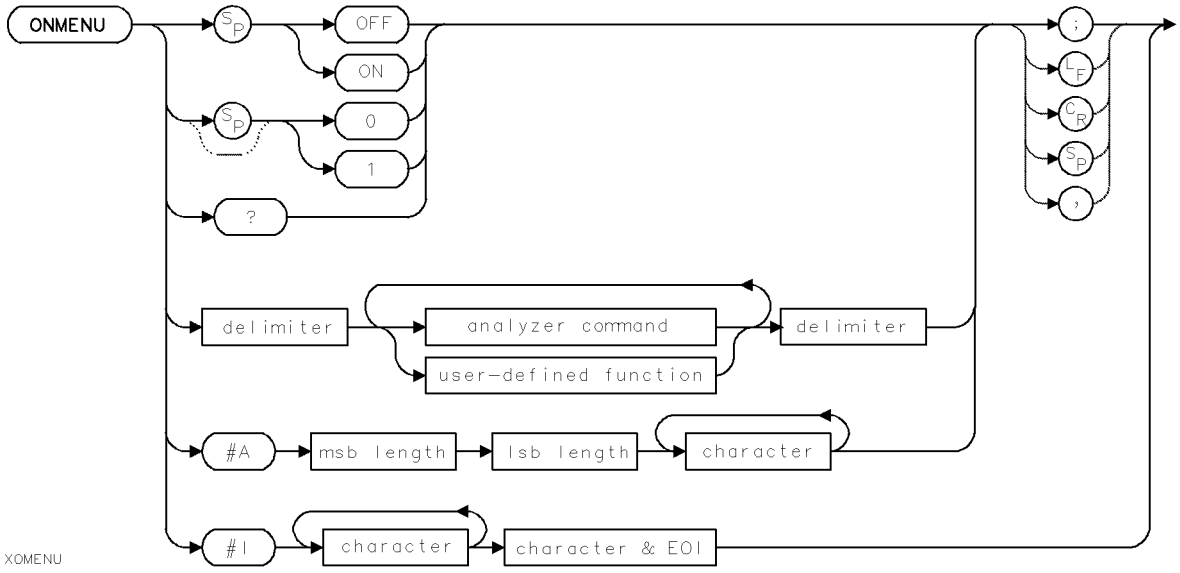


| Item | Description |
|---|---|
| Requirements | Requires internal memory. See Appendix D for commands that consume memory.<br><br>Requires FUNCDEF when using *user-defined function*. |
| Preset State | OFF |
| Interdependent Commands | ABORT, DEBUG, DISPOSE, FORMAT, PAUSE, PROTECT, RETURN |

## Example

```
10 OUTPUT 718;"ONMENU|;"                    Begin definition of on-menu-keypress
                                            algorithm.
20 OUTPUT 718;"TITLE &MENU key pressed.&;"  Set title.
30 OUTPUT 718;"|;"                          End on-menu-keypress algorithm.
```

The ONMENU command executes the algorithm in the data field when internal (MENU) key functions are completed.

The ONMENU algorithm is user-defined and consists of other analyzer commands, much like the user-defined functions created with the FUNCDEF command. The algorithm is stored in internal memory.

`DISPOSE ONMENU` and `FORMAT` delete the on-menu-keypress algorithm from internal memory.

`ONMENU ON` or `ONMENU 1` activates the algorithm.

`ONMENU OFF`, `ONMENU 0`, or `IP` deactivates the algorithm. (Executing CLEAR 718 also deactivates the algorithm.)

`ONMENU?` returns the algorithm definition to the computer.

In the syntax diagram above, the delimiters mark the beginning and end of the algorithm.

See PROTECT and DISPOSE.

## Query Response

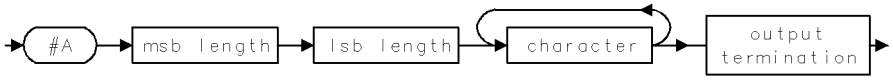

# ONMKR

ON MARKER PAUSE

Define list of functions executed when sweep reaches pause marker.

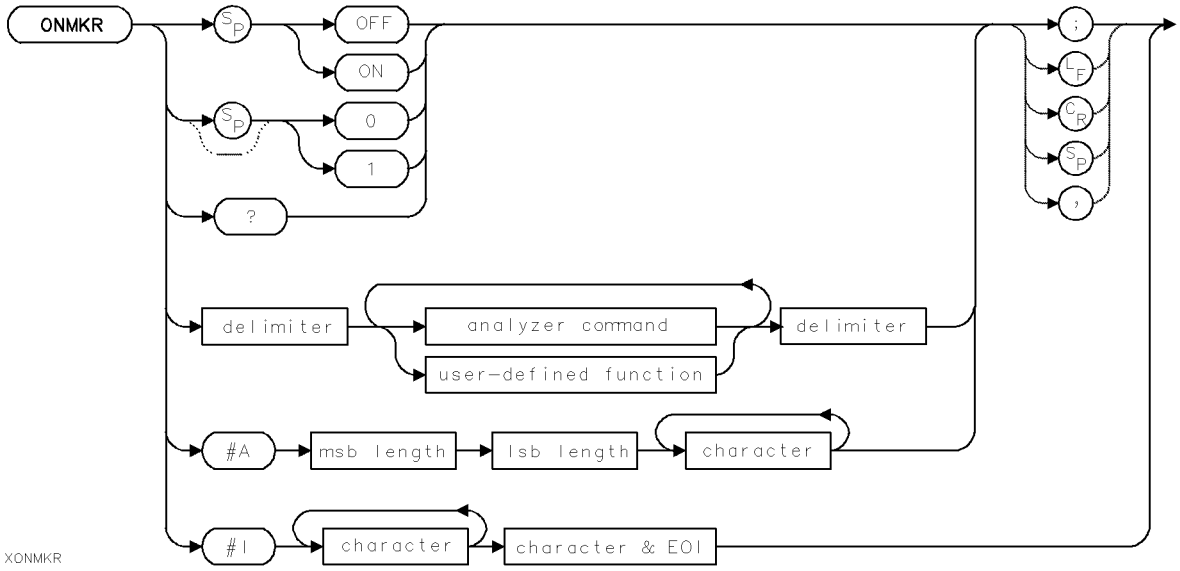


| Item | Description |
|---|---|
| Requirements | Requires internal memory. See Appendix D for commands that consume memory.<br><br>Requires FUNCDEF when using *user-defined function.* |
| Preset State | OFF |
| Interdependent Commands | ABORT, DEBUG, DISPOSE, FORMAT, MKPAUSE, PAUSE, PROTECT, RETURN |

## Example

```
10 OUTPUT 718;"ONMKR|;"                    Begin definition of on-marker-pause
                                           algorithm.
20 OUTPUT 718;"TITLE &Reached marker.&;"   Set title.
30 OUTPUT 718;"|;"                         End on-marker-pause algorithm.
```

The ONMKR command executes the algorithm in the data field when internal marker functions are completed. MKPAUSE must be set to a non-zero time.

The ONMKR algorithm is user-defined and consists of other analyzer commands, much like the user-defined functions created with the FUNCDEF command. The algorithm is stored in internal memory. Each time the sweep reaches the marker, the algorithm is executed.

`DISPOSE ONMKR` and `FORMAT` delete the on-marker-pause algorithm from internal memory.

`ONMKR ON` or `ONMKR 1` activates the algorithm.

`ONMKR OFF`, `ONMKR 0`, or `IP` deactivates the algorithm. (Executing CLEAR 718 also deactivates the algorithm.)

`ONMKR?` returns the algorithm definition to the computer.

In the syntax diagram above, the delimiters mark the beginning and end of the algorithm.

See PROTECT and DISPOSE.

## Query Response

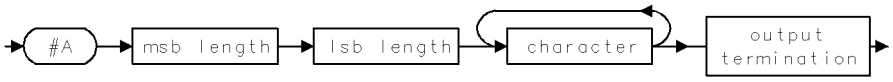

# ONUSER

ON USER KEYPRESS

Define list of functions executed when [USER] is pressed.

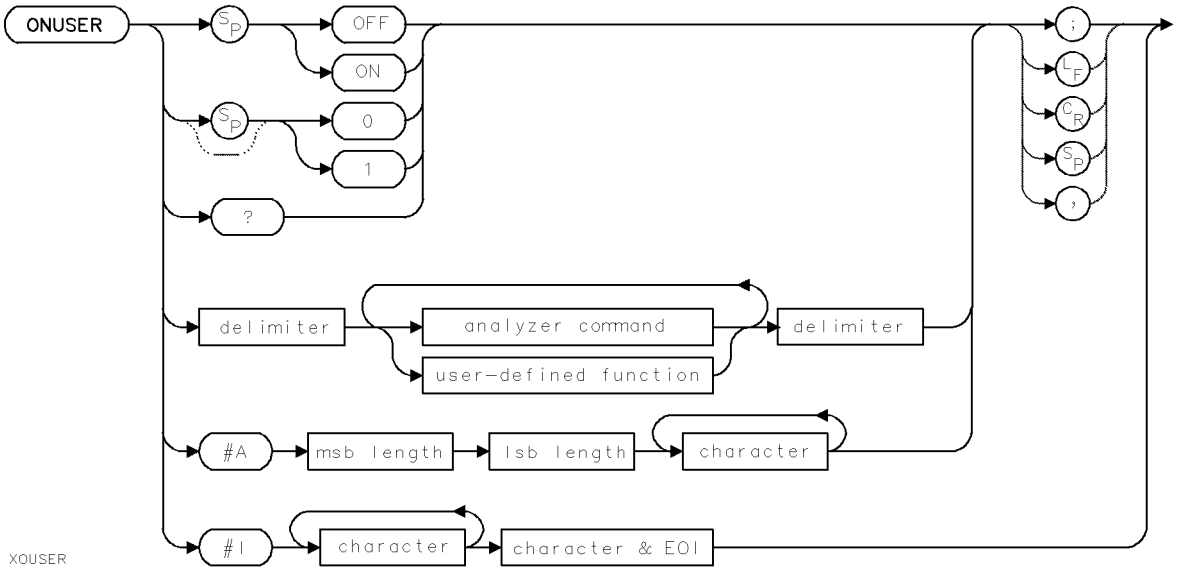


| Item | Description |
|---|---|
| Requirements | Requires internal memory. See Appendix D for commands that consume memory.<br><br>Requires FUNCDEF when using *user-defined function.* |
| Preset State | OFF |
| Interdependent Commands | ABORT, DEBUG, DISPOSE, FORMAT, PAUSE, PROTECT, RETURN |

## Example

```
10 OUTPUT 718;"ONUSER|;"                    Begin definition of on-user-keypress
                                            algorithm.
20 OUTPUT 718;"TITLE &USER key pressed.&;"  Set title.
30 OUTPUT 718;"|;"                          End on-user-keypress algorithm.
```

The ONUSER command executes the algorithm in the data field when internal [USER] key functions are completed.

The ONUSER algorithm is user-defined and consists of other analyzer commands, much like the user-defined functions created with the FUNCDEF command. The algorithm is stored in internal memory. Each time the [USER] key is pressed, the algorithm is executed.

`DISPOSE ONUSER` and `FORMAT` delete the on-user-keypress algorithm from internal memory.

`ONUSER ON` or `ONUSER 1` activates the algorithm.

`ONUSER OFF`, `ONUSER 0`, or `IP` deactivates the algorithm. (Executing CLEAR 718 also deactivates the algorithm.)

`ONUSER?` returns the algorithm definition to the computer.

In the syntax diagram above, the delimiters mark the beginning and end of the algorithm.

See PROTECT and DISPOSE.

## Query Response

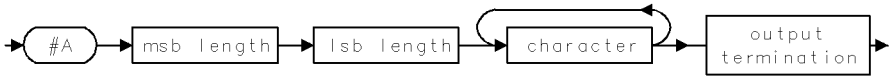

# ONWINDOW

ON WINDOW RECREATION

Define list of functions executed when display window is recreated.

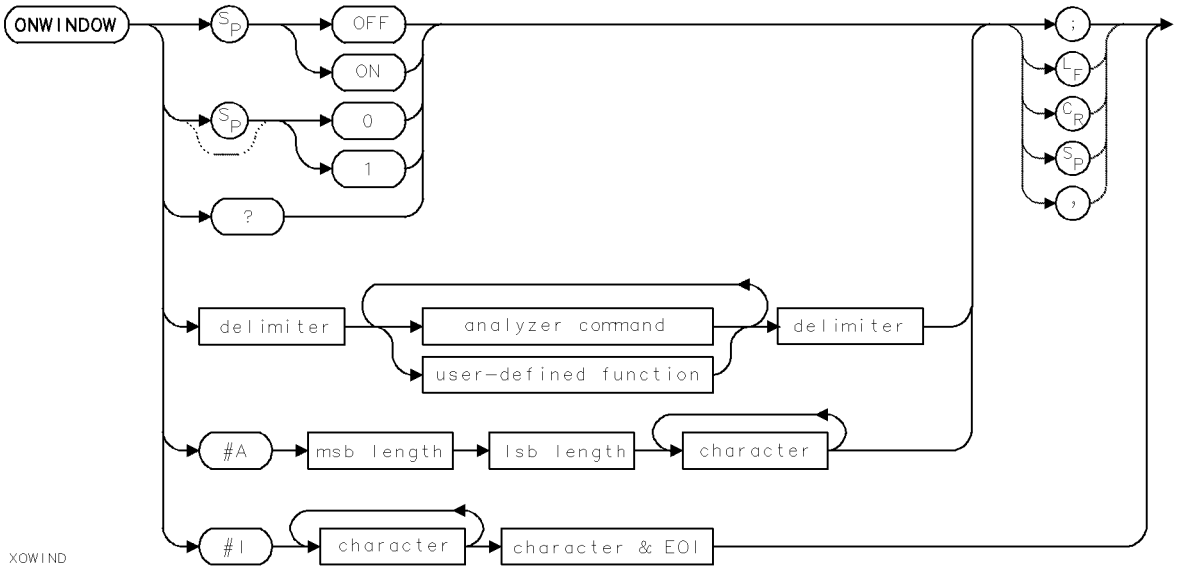


| Item | Description |
|---|---|
| Requirements | Requires internal memory. See Appendix D for commands that consume memory.<br><br>Requires FUNCDEF when using *user-defined function.* |
| Preset State | OFF |
| Interdependent Commands | ABORT, DEBUG, DISPOSE, FORMAT, PAUSE, PROTECT, RETURN |

## Example

```
10 OUTPUT 718;"ONWINDOW|;"                    Begin definition of on-window-recreation
                                              algorithm.
20 OUTPUT 718;"TITLE &Redrawing window.&;"    Set title.
30 OUTPUT 718;"|;"                            End on-window-recreation algorithm.
```

The ONWINDOW command executes the algorithm in the data field when the analyzer display needs to be redrawn.

The ONWINDOW algorithm is user-defined and consists of other analyzer commands, much like the user-defined functions created with the FUNCDEF command. The algorithm is stored in internal memory. Each time the display is redrawn, the algorithm is executed.

`DISPOSE ONWINDOW` and `FORMAT` delete the on-window-recreation algorithm from internal memory.

`ONWINDOW ON` or `ONWINDOW 1` activates the algorithm.

`ONWINDOW OFF`, `ONWINDOW 0`, or `IP` deactivates the algorithm. (Executing CLEAR 718 also deactivates the algorithm.)

`ONWINDOW?` returns the algorithm definition to the computer.

In the syntax diagram above, the delimiters mark the beginning and end of the algorithm.

See PROTECT and DISPOSE.

## Query Response

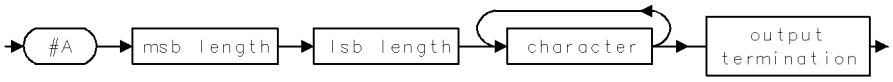

# OP

OUTPUT INSTRUMENT-WINDOW PARAMETERS

Return coordinates of **instrument window**.

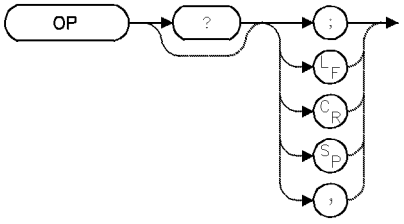


| Item | Description |
|---|---|
| Interdependent Commands | IWINDOW, CLRDSP |

## Example

Return coordinates of $P_1$ and $P_2$ for the current instrument window.

```
110 OUTPUT 718;"OP?;"              Return coordinates of P1 and P2.
120 ENTER 718;P1x,P1y,P2x,P2y      Assign values to computer variables.
```

The OP command returns the values of $P_1$ and $P_2$ for the current **instrument window** scale. For the default instrument window, the X and Y coordinates for $P_1$ and $P_2$ are (112,16) and (911,383).

$P_1$ corresponds to the lower-left vertex. $P_2$ corresponds to the upper-right vertex.

If more than one instrument window is displayed, OP returns the values $P_1$ and $P_2$ for all windows.

## Query Response

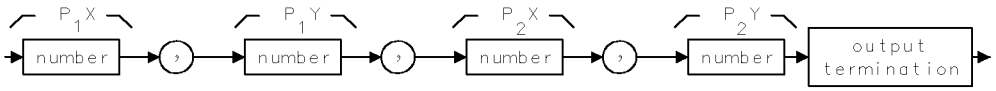

# OPTATN

OPTICAL ATTENUATOR

Controls the optical input attenuator.

**Note** The OPTATN command is similar in operation to the AT command which is the preferred command. See the AT command for more information.

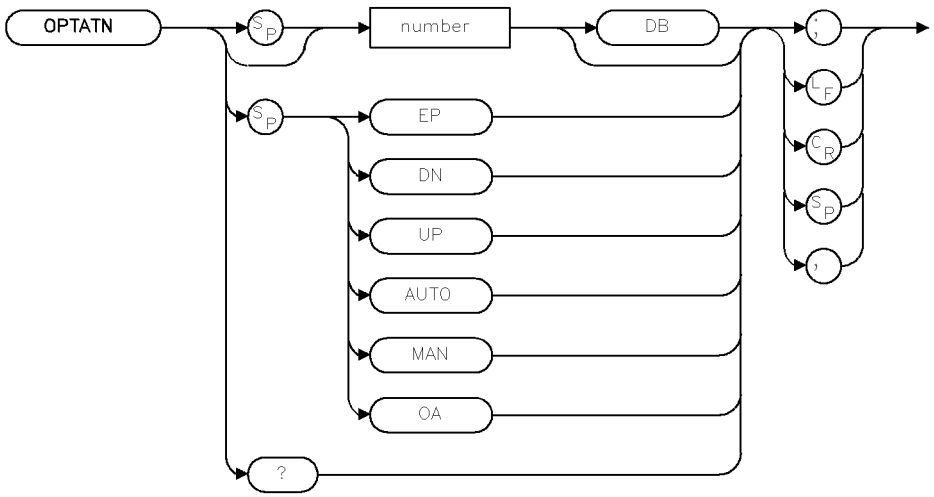


| Item | Description |
|---|---|
| Range | −300 dB to +300 dB |
| Preset State | AUTO |
| Interdependent Commands | AT |

## Example

```
10 OUTPUT 718;"OPTATN 6DB;"
20 OUTPUT 718;"OPTATN?;"
30 ENTER 718;Atten
```

The AT command specifies RF-input attenuation between the input port and the first mixer, in 10 dB increments. To prevent spectrum analyzer damage, the attenuation can be set to 0 dB only by numeric entry with the keypad or by executing `AT 0`.

When the lightwave input is active, the AT command controls the lightwave attenuator.

The input attenuator is coupled to the settings of the reference level (RL), maximum-mixer level (ML), and maximum-input level (MIL). The coupling keeps the mixer-input level below a gain-compression level ehwn a continuous wave signal is displayed with its peak at the reference level.

## Query Response

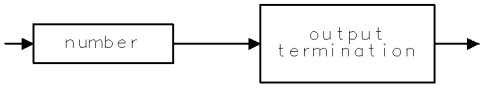


QNUM

# OPTMODE

OPTICAL MODE

Select between an optically and electrically calibrated display.

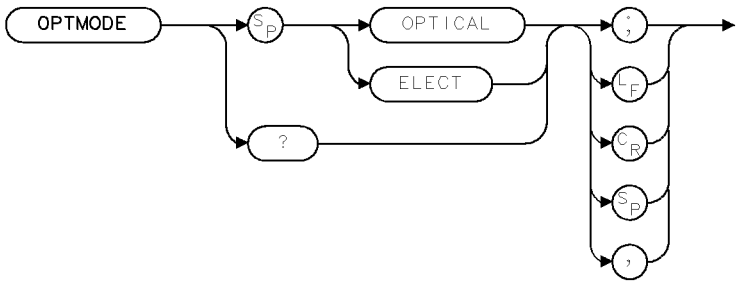


XOPMOD

| Item | Description |
|---|---|
| Requirements | Requires a lightwave module. |
| Preset State | OPTICAL |
| Interdependent Commands | INPUT |

## Example

```
10 OUTPUT 718;"OPTMODE OPTICAL;"
20 OUTPUT 718;"OPTMODE?;"
```

The OPTMODE command selects between an optically and electrically calibrated display when in the lightwave mode. The current units setting is annotated in the upper left-hand corner of the display (`LW OPT` or `LW ELEC`).

When optical units are selected, optical modulation is displayed on the spectrum analyzer in optically calibrated units which are in direct correspondence to the average optical power.

When electrical units are selected, optical modulation is displayed in electrical units (as it appears at the output of the lightwave section) and a calibrated responsivity is made available. This is the responsivity from the lightwave section's PIN diode.

When changing between the optical and electrical lightwave modes, traces A, B, and C will be automatically converted to the new dB scale. However, user-defined traces are not converted.

## Query Response

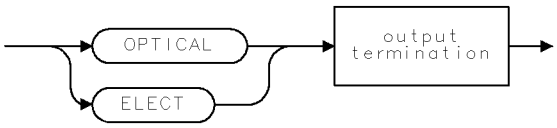


QOPMOD

# OPTPWR

OPTICAL POWER

Return a measured value of optical power.

**Note** The OPTPWR command is similar in operation to the PWRBAR command which is the preferred command. See the PWRBAR command for more information.

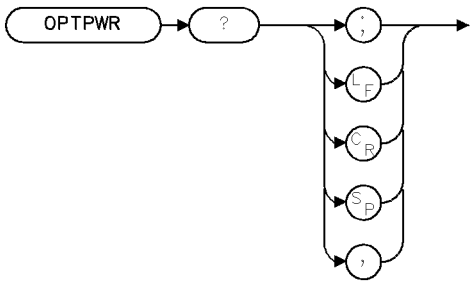


XOPPWR

| Item | Description |
|---|---|
| Requirements | Requires a lightwave module. |
| Interdependent Commands | PWRBAR, INPUT |

## Example

```
10 OUTPUT 718;"OPTPWR?;"     Ask for average power reading.
20 ENTER 718;Optpwr          Read reply.
```

The OPTPWR query returns a measured value of average power. The measurement is started when the query is received. The power bar does not have to be displayed in order to be queried.

Power is returned in the current AUNITS. If the signal-to-noise ratio is insufficient to make an accurate measurement, a power level of −300 dBm is returned. This can often be remedied by decreasing the attenuation (AT), which will result in more signal at the input. Lowering the reference level will also reduce the attenuation if the attenuator is auto-coupled.

If the power meter is overranged (too much input), an inaccurate reading will result. The overrange bit in the status-byte (STB?, or serial poll on HP-IB) will indicate this condition. The request service mask (RQS) can also be set to cause an RQS on HP-IB whenever the power meter goes overrange. This situation can be remedied by increasing the attenuation, or reference level (if AT AUTO is in effect).

## Query Response

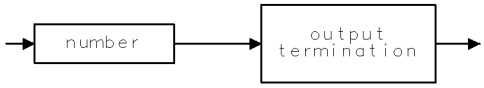


QNUM

# OR

ORIGIN

Set position of origin.

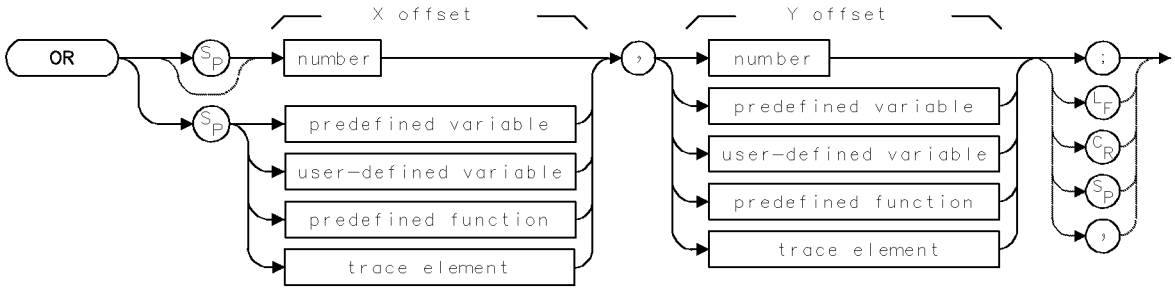


| Item | Description |
|---|---|
| X-Offset Range | Determined by SCALE or DWINDOW. |
| Y-Offset Range | Determined by SCALE or DWINDOW. |
| Requirements | VARDEF required when using *user-defined variable*. |
| Interdependent Commands | SCALE, DWINDOW, IWINDOW, IT, PA, PR |
| Preset State | OR 0,0 |

## Example

Use OR to position a grid. (See GRID.)

```
140 CLEAR 718                          Initialize analyzer.
150 OUTPUT 718;"IP;"
160 OUTPUT 718;"TRDSP TRA,OFF;"        Turn off trace A.
170 OUTPUT 718;"CLRDSP;"               Clear graphics from memory. Locate origin
                                       at 0,0 (lower-left corner). Set the units for
                                       the X and Y scale to their preset values, 0 to
                                       1000.
180 OUTPUT 718;"OR 100,200;"           Offset the origin 100 units horizontally and
                                       200 units vertically.
190 OUTPUT 718;"PD;GRID 20,40,5,10;"   Draw a grid. Its position is offset according
                                       to OR (line 180).
```

## Example

Use OR to position a graphics window. (See DWINDOW.)

```
210 CLEAR 718                          Initialize analyzer.
220 OUTPUT 718;"IP;"
230 OUTPUT 718;"CLRDSP;"               Clear graphics from memory.
240 OUTPUT 718;"OR 100,500;"           Offset the origin 100 units horizontally and
                                       500 units vertically.
250 OUTPUT 718;"DWINDOW 100,500,TRA;"  Define a graphics window, scaled to trace-A
                                       parameters.
```

```
260 OUTPUT 718;"PD;GRAPH TRA;"        Draw trace A inside the window.
270 PAUSE                             Observe display, then press CONTINUE on
                                      computer keyboard.
280 OUTPUT 718;"DWINDOW OFF;"         Turn off the window.
```

## Example

Use OR to position a graphics **item**. (See IT.)

```
250 CLEAR 718                         Initialize analyzer.
260 OUTPUT 718;"IP;"
265 OUTPUT 718;"BLANK TRA;"           Blank trace A.
270 OUTPUT 718;"CLRDSP;"              Clear graphics from memory.
280 OUTPUT 718;"IT 1;VW OFF;"         Address item 1 and blank it.
290 OUTPUT 718;"TEXT$Item 1$;"        Define item 1 as text.
300 OUTPUT 718;"OR 700,200;"          Offset origin by 700 units horizontally and 200
                                      units vertically.
310 OUTPUT 718;"VW ON;"               Display item.
```

The OR command offsets the position of graphics on the display relative to $P_1$, in the current scale units set by the SCALE or DWINDOW command.

Use OR to position items created with the IT command or to position new coordinate systems (**graphics window**) created with the window command, DWINDOW.

See "Creating Graphics" in the Programming Fundamentals chapter.

# OUTPUT

OUTPUT VIA HP-IB

Send message to HP-IB device.

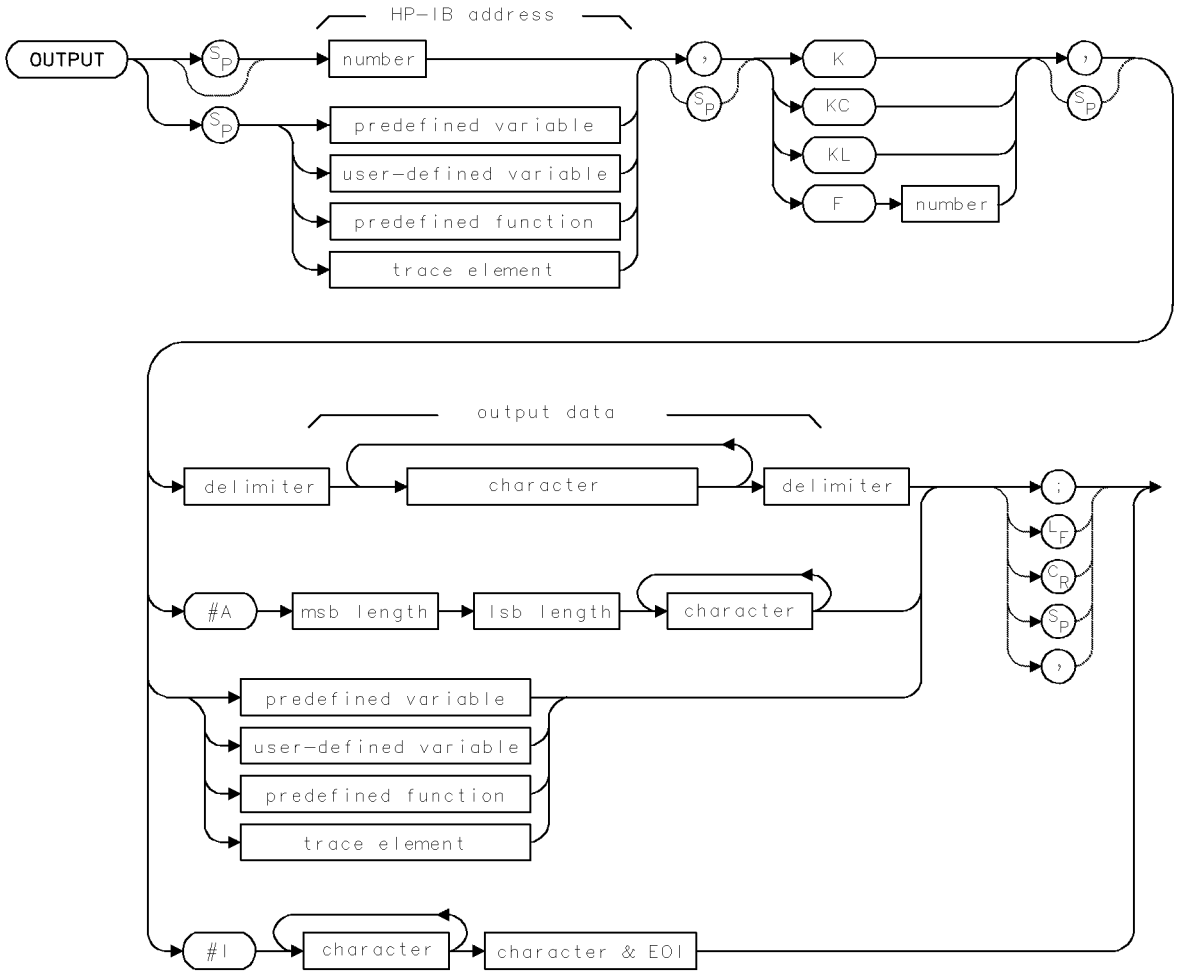


| Item | Description |
|---|---|
| Address Range | Integers, 0 – 30 |
| Requirements | VARDEF required when using *user-defined variable*. |
| Interdependent Commands | RELHPIB, ACTDEF, FUNCDEF |

## Example

Use the analyzer as a controller on HP-IB. In the example, the controlled HP-IB device is an HP 3478 multimeter at address 23. Press the user-defined key, VDM, to communicate with the multimeter.

```
150 REMOTE 7                          Place all devices in remote status.
160 CLEAR 718                         Clear the analyzer HP-IB interface buffer.
170 OUTPUT 718;"IP;"                  Preset analyzer.
180 OUTPUT 718;"VARDEF NN,0;"         Assign 0 to user-defined variable, NN.
190 OUTPUT 718;"FUNCDEF VDM,^";       Begin definition of user-defined function,
                                      called VDM.
200 OUTPUT 718;"OUTPUT 23,K,$H5$;";   Send message, "H5" to multimeter.
210 OUTPUT 718;"ENTER 23,K,NN;";      Receive value in amperes from multimeter.
                                      Store value in NN.
220 OUTPUT 718;"CLRDSP;";             Clear graphics from memory.
230 OUTPUT 718;"PA 400,500;";         Set pen at (400,500).
240 OUTPUT 718;"MPY NN,NN,1000;";     Convert returned value to milliamperes.
250 OUTPUT 718;"DSPLY NN,7,4;";       Display value on analyzer display.
260 OUTPUT 718;"RELHPIB;";            Release control of HP-IB.
270 OUTPUT 718;"^;"                   End definition of user-defined function.
280 OUTPUT 718;"KEYDEF 7,VDM,$VDM$;"  Assign function to user-defined key, called
                                      VDM.
290 SEND 7;UNL UNT DATA               Clear HP-IB of all talkers and listeners.
300 LOCAL 718                         Place analyzer in local control. Press (USER),
                                      then press the user-defined key, VDM, to
                                      communicate with the multimeter.
```

The OUTPUT command establishes the analyzer as a controller on HP-IB. Use OUTPUT to send data or instructions to an HP-IB device.

Since HP-IB allows one controller only on HP-IB, OUTPUT must be synchronized with computer operation or else must be incorporated into user-defined functions that are executed with keys when a computer is not connected to HP-IB. (Press (LCL) for manual operation.) If another controller is detected on HP-IB, the OUTPUT function is aborted. (See "Executing User-Defined Functions" under "Storing New Functions in the Spectrum Analyzer" in the Programming Fundamentals chapter.)

Execute RELHPIB to discontinue analyzer control of HP-IB.

*HP-IB Address* specifies the address of the device.

*Format* formats the data as follows:

K sends characters (ASCII) with no terminator.

KC sends characters (ASCII), followed by carriage-return/line-feed (ASCII codes 13 and 10).

KL sends characters (ASCII), followed by line-feed (ASCII code 10) and END (end-or-identify).

F sends data as ASCII-decimal numbers. In the syntax diagrams, the integer part of the number specifies the field width. The decimal part specifies the number of decimal places.

See ENTER. See also "Spectrum Analyzer Control of HP-IB" in the Programming Fundamentals chapter.

# OVRSWP

OVERSWEEP

Change accuracy criteria that cause “UNCAL” indicator to appear.

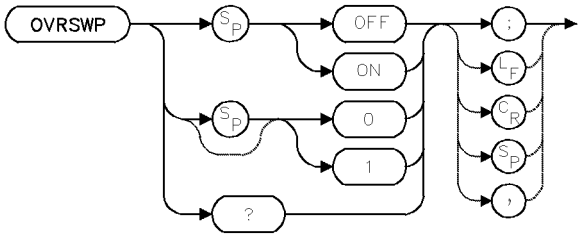


| Item | Description |
|---|---|
| Coupling | Oversweep affects the coupling of resolution bandwidth (RB), video bandwidth (VB), and span (SP) to sweep time. |
| Interdependent Commands | RB, ST, VB, SP |

During normal operation, the over-sweep function is off and the resolution bandwidth, video-bandwidth, sweep-time, and span settings are coupled to yield specified amplitude and frequency accuracy with maximum measurement speed. Whenever any of these settings are changed, the spectrum analyzer continues to maintain specified accuracy whenever possible. The uncalibrated warning, “UNCAL” is displayed whenever the new selection affects amplitude or frequency accuracy.

Executing `OVRSWP ON` allows an additional 2% of frequency error and 2 dB of amplitude error before the “UNCAL” indicator appears. A “+” appears next to the readout for sweep time, (“ST” beneath the graticule) to indicate that the over-sweep function is on.

Use `OVRSWP ON` to obtain faster sweep times (up to five times faster) when optimum accuracy is not required and the “UNCAL” indicator is undesirable.

## Query Response

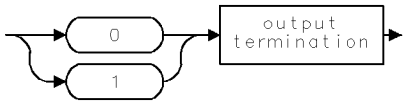

# OVRW

OVERWRITE

Enable clear-write mode, but skip the initial clear.

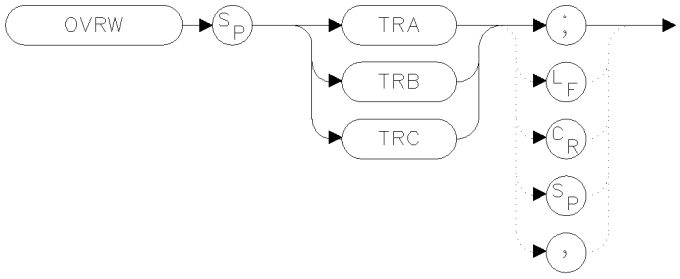


xovrw

## Example

```
100 OUTPUT 723;"OVRW TRA;"      Set this mode for trace A.
```

The action of OVRW is identical to CLRW except that OVRW does not initially clear the internal representation of the trace (the display is still cleared).

# PA

PLOT ABSOLUTE

Move pen to absolute coordinate.

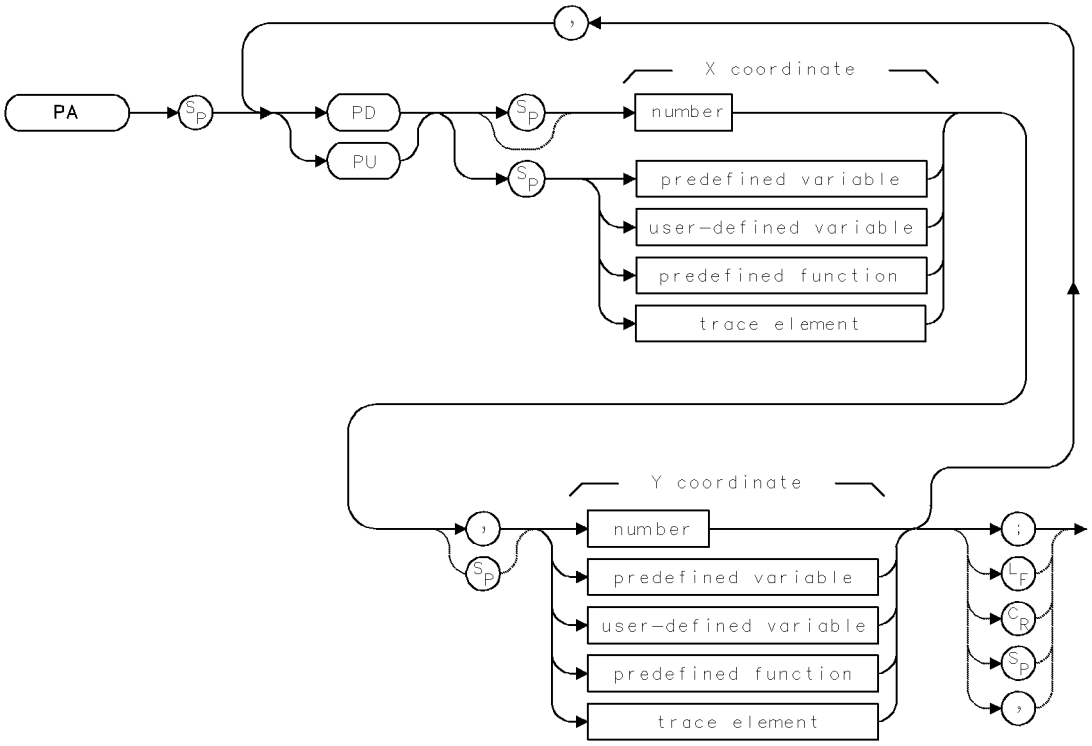


| Item | Description |
|---|---|
| X-Coordinate Range | Determined by SCALE or DWINDOW |
| Y-Coordinate Range | Determined by SCALE or DWINDOW |
| Interdependent Commands | CLRDSP, LINET, OR, PEN, SCALE, DWINDOW, IT, PU, PD, GRID, GRAPH, DSPLY, MK |

## Example

Use PA to draw on the analyzer display.

```
110 CLEAR 718                          Initialize analyzer.
120 OUTPUT 718;"IP;"
130 OUTPUT 718;"CLRDSP;"               Clear graphics from memory.
140 OUTPUT 718;"PA PU 0,0;"            Move the pen in the up position to (0,0).
150 OUTPUT 718;"PA PD 1000,1000;"      Move the pen in the down position to (1000,1000),
                                       drawing a diagonal line.
160 OUTPUT 718;"PU;PA 0,1000;"         Place pen up and move it to (0,1000). (Notice that
                                       pen-up can be specified using PU as a separate
                                       command or as part of the PA syntax.)
```

```
170 OUTPUT 718;"PD;PA 1000,0;"
```

*Place pen down and move it to (1000,0), drawing a line.*

The PA command moves the graphics pen from its current position to the position specified. A line is drawn on the analyzer display if the pen is down. Use the LINET command to vary the type of line drawn.

Positions are specified as coordinates in the current units, which are set by the SCALE command, or by the DWINDOW command when a graphics window is on.

See PD, PU, SCALE, DWINDOW, and LINET.

# PADC

PRESET ADC

Determine which analog-to-digital converter is activated by the IP command or the instrument-preset key.

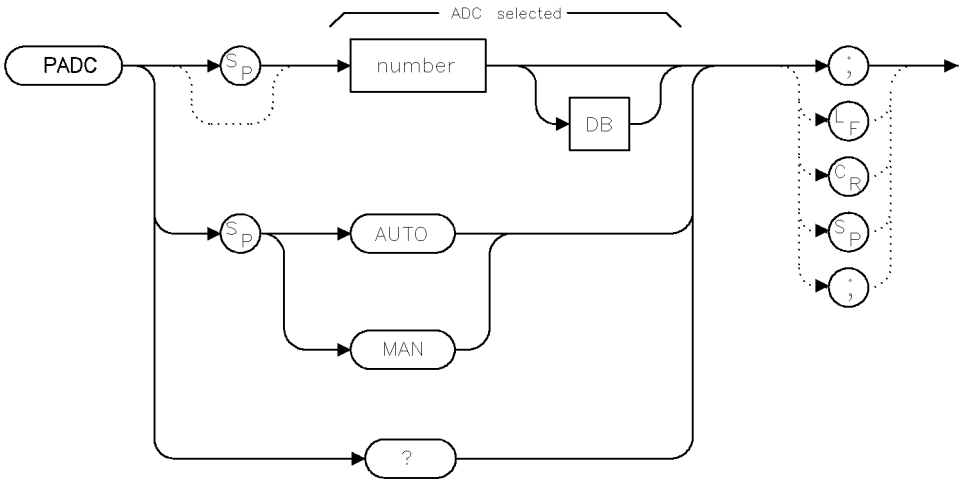


| Item | Description |
|---|---|
| Analog-to-Digital-Converter-Number Range | System dependent. |
| Interdependent Commands | ADC |

## Example

Make digitizing with the HP 70700A digitizer the preset condition.

```
10 OUTPUT 718;"PADC 2;"
```

The PADC command specifies whether internal or external video processing is active when the analyzer is in its preset state. (See ADC.)

`PADC 1` enables internal processing after instrument preset.

`PADC 2` (or greater) enables external video processing after instrument preset.

## Query Response

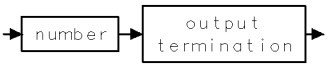

# PATHLOCK

PATH LOCK

Restrict signal path through selected modules.

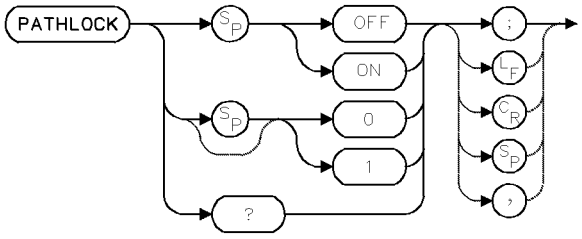


| Item | Description |
|---|---|
| Preset State | PATHLOCK OFF |

## Example

Restrict the signal path to one of two IF modules when a signal path through each is possible.

```
100 CLEAR 718                    Initialize analyzer.
110 OUTPUT 718;"IP;"
120 OUTPUT 718;"RB 3MHZ;"        Select wide bandwidth.
130 OUTPUT 718;"PATHLOCK ON;"    Lock signal path to wideband IF module.
140 OUTPUT 718;"RB 100KHZ;"      Select another bandwidth.
```

The PATHLOCK command locks the signal path to its current path. When path-lock is on, the signal path is limited to one module and any inputs associated with that module.

For example, two signal paths are available for 100-kHz filtering when narrow and wideband IF modules are incorporated into an analyzer system (for example, HP 71200C modular spectrum analyzer). If PATHLOCK ON is executed when the 3 MHz filter is active, the signal path remains in the wideband IF module when the 100-kHz bandwidth is activated. The use of PATHLOCK is also advantageous when LOSTART and LOSTOP are used to control the local oscillator frequency. In this case, PATHLOCK prevents band switching.

## Query Response

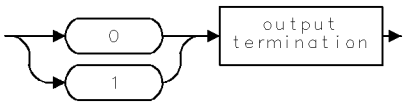

# PAUSE

PAUSE

Suspend program operation.

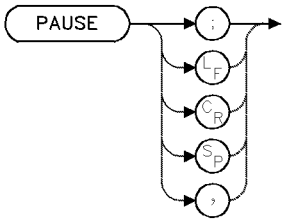


## Example

Pause program operation.

```
150 OUTPUT 718;"CF 300MHZ;"     Set center frequency.
160 OUTPUT 718;"PAUSE;"         Press CONT key on spectrum analyzer to resume program operation.
170 OUTPUT 718;"SP 1MHZ;"       Set span.
```

The PAUSE command stops program operation and activates the **debug mode**. Program operation remains stopped until one of the following occurs:

- The CONT key is pressed.
- The (INSTR PRESET) or (I-P) key is pressed.
- DEBUG OFF is executed.
- The spectrum analyzer input buffer is cleared via HP-IB. (For example, HP BASIC command CLEAR 718 clears the buffer when the spectrum analyzer is at HP-IB address 18, interface 7.)

# PC

PRESELECTOR CENTERING

Perform preselector centering.

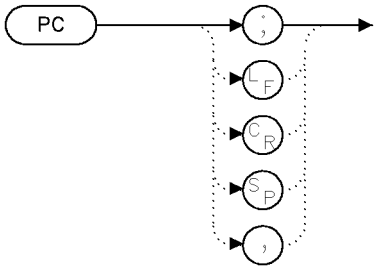


pc

| Item | Description |
|---|---|
| Inter-Dependent Commands | PCDELTA |
| Preset State | 6 dB |

## Example

PC; Perform preselector centering using the current PCDELTA.

Preselector centering is not the same as preselector peaking. Preselector centering still finds the preselector DAC value that causes a peak reading, but it then also finds the DAC values that correspond to the delta signal values. The result is the average of the left and right DAC values.

If RB is coupled when PC is invoked, the nearest RB to 1 MHz will be used for the centering. If RB is not coupled, the entry RB will be used instead.

A preselector is required for this command. Error 2032, "Hardware not present", is given if there is not a preselector in the system. Error 2047, "Preselector disabled", is given if there is a preselector in the system, but it is currently not enabled.

Warning 16010, "RBW too wide for PC", is given if the RB is greater than 1 MHz.

# PCDELTA

PRESELECTOR CENTERING DELTA

Adjust the delta value for performing preselector centering.

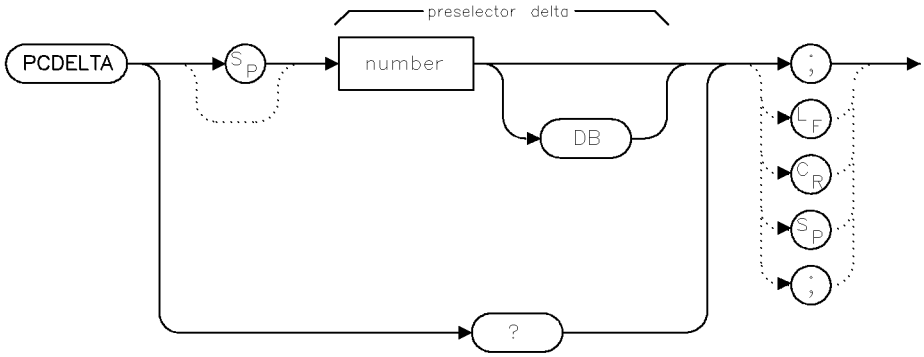


pcdelta

| Item | Description |
|---|---|
| Inter-Dependent Commands | PC |
| Preset State | 6 dB |

## Example

```
PCDELTA 3;  Set preselector centering delta to 3 dB.
PCDELTA?    Report the current PC delta.
```

Preselector centering is not the same as preselector peaking. Preselector centering still finds the preselector DAC value that causes a peak reading, but it then also finds the DAC values that correspond to the delta signal values. The result is the average of the left and right DAC values.

If RB is coupled when PC is invoked, the nearest RB to 1 MHz will be used for the centering. If RB is not coupled, the entry RB will be used instead.

A preselector is required for this command. Error 2032, “Hardware not present”, is given if there is not a preselector in the system. Error 2047, “Preselector disabled”, is given if there is a preselector in the system, but it is currently not enabled.

Warning 16010, “RBW too wide for PC”, is given if the RB is greater than 1 MHz.

## Query Response

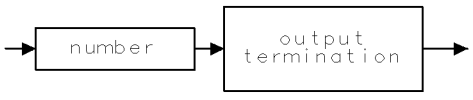


qgennum

# PD

PEN DOWN

Place pen down.

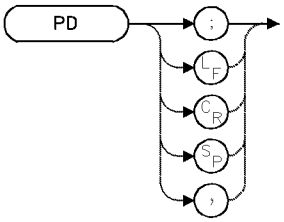


| Item | Description |
|---|---|
| Preset State | Deactivated, pen up |
| Interdependent Commands | CLRDSP, MK, GRAPH, GRID, PA, PR, DSPLY |

## Example

Use PD to draw lines.

```
140 CLEAR 718                    Initialize analyzer.
150 OUTPUT 718;"IP;"
160 OUTPUT 718;"CLRDSP;"         Clear graphics from memory.
170 OUTPUT 718;"BLANK TRA;"      Blank trace A.
180 OUTPUT 718;"ANNOT OFF;"      Blank annotation.
190 OUTPUT 718;"PU;PA 400,400;"  Pen up. Move pen to (400,400).
200 OUTPUT 718;"PD;PA 1000,0;"   Place pen down. Draw line to (1000,0).
```

## Example

Use PD to draw a marker with the MK command.

```
10 CLEAR 718                     Initialize analyzer.
20 OUTPUT 718;"IP;"
30 OUTPUT 718;"CLRDSP;"
40 OUTPUT 718;"ANNOT OFF;"       Blank annotation.
50 OUTPUT 718;"BLANK TRA;"       Blank trace A.
60 OUTPUT 718;"PD;MK 500,500;"   Place pen down. Draw marker at (500,500).
```

The PD command places the graphics pen down. The pen draws on the analyzer display whenever its position is changed while in the down position.

The pen must be placed down to draw all objects except for those referenced with item command, IT, or for characters written with the TITLE command. Place the pen down to draw the following objects. (Associated commands are in parenthesis.)

- Lines (PA,PR)
- Grids (GRID)
- Graphics marker (MK)
- Graphs (GRAPH)

- Variables (DSPLY)

# PDA

PROBABILITY DISTRIBUTION OF AMPLITUDE

Analyze distribution of detected signals according to amplitude.

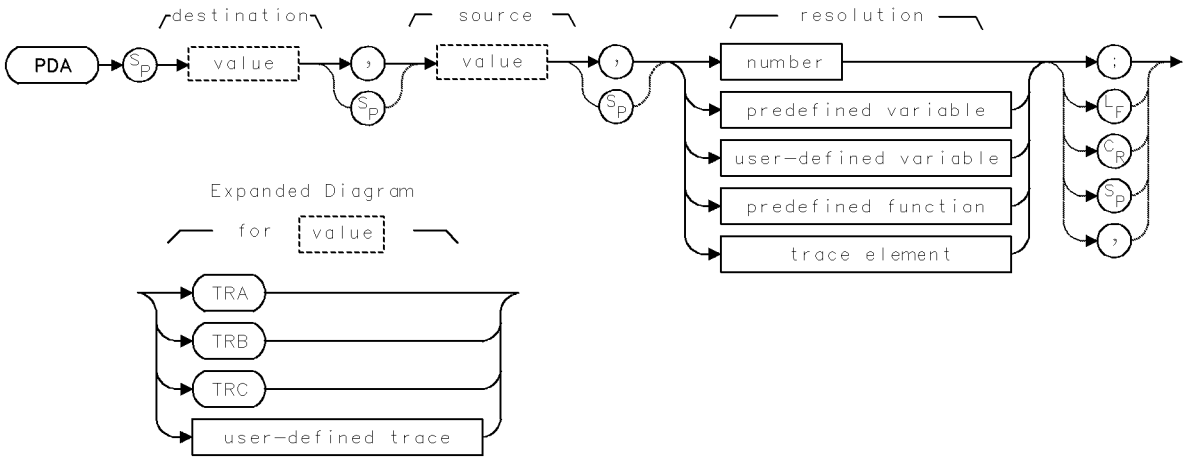


| Item | Description |
|---|---|
| Source or Destination Amplitude Range | 0 – 10,000 measurement units for linear trace data in *TRA*, *TRB*, *TRC*, or *user-defined trace*. –32,768 – +32,767 measurement units for logarithmic trace data in *TRA*, *TRB*, *TRC*, or *user-defined trace*. |
| Resolution Range | Limited by source amplitude. |
| Source-Length Range | 3 – 1024 position units. Default is 800 position units when using *TRA*, *TRB*, *TRC*. Truncated if longer than destination length. If shorter than destination length, last element is extended for operation. |
| Destination-Length Range | 3 – 1024 position units. |
| Requirements | Be sure data reflects one complete sweep when using *TRA*, *TRB*, *TRC*, or *trace range* for source. SNGLS and TS suggested. Requires internal memory. See Appendix D for commands that consume memory. TRDEF required when using *user-defined trace*. VARDEF required when using *user-defined variable*. |

## Example

Perform amplitude distribution function on trace A.

```
90 OUTPUT 718;"SNGLS;TS;"          Activate single-sweep mode. Clear-write trace A.
100 OPTION BASE 1                  Specify lower boundary of arrays to be 1.
110 OUTPUT 718;"TRDEF NN,20;"      Define user-defined trace of 20 elements, NN.
120 OUTPUT 718;"MOV NN,0;"         Store 0 in all elements of trace array.
130 OUTPUT 718;"PDA NN,TRA,5;"     Perform amplitude distribution function on trace
                                   A.
140 DIM A(20)                      Dimension 20-element computer array.
150 OUTPUT 718;"NN?;"              Return values stored in NN.
160 ENTER 718;A(*)                 Store values in computer array.
170 FOR I=1 TO 20                  Print values on computer display.
```

```
180 PRINT A(I)
190 NEXT I
```

This command replaces the destination trace with the amplitude distribution function of the source trace. The data in the source trace is processed point by point. The value of the bottom of the display is subtracted from each point, then the difference is divided by the resolution value which has been rounded to the nearest integer. If the result falls within the range of the elements of the destination trace, the content of the corresponding destination trace element is increased by one.

For example, assume that the source trace is displayed on a logarithmic scale of 10 dB per division, which produces an amplitude range of 100 dB. Choosing a resolution parameter of 5 divides the displayed amplitude range of trace A (100 dB) into twenty 5 dB increments numbered 1 through 20, with increment 1 beginning at the bottom graticule line and increment 20 ending at the reference level.

A resolution parameter of 5 yields a function that evaluates the amplitude of each point of trace A as follows. A trace-A point that is within 5 dB of the reference level adds 1 to the 20th point of the destination trace. A trace-A point that is between 5 to 10 dB below the reference level adds 1 to the 19th point in the destination trace, and so forth. Thus, if the amplitude of the first point is 12 dB below the reference level, the amplitude of the eighteenth point of the destination trace increases by 1. Likewise, if the amplitude of the second point of the source trace is 17 dB below the reference level, the seventeenth point of the destination trace increases by 1. Note that the destination trace must be long enough, in this case, 20 points long.

If the source trace is displayed on a linear scale, a resolution parameter of 5 divides the amplitude range into 20 increments of 500 measurement units each (5% of 10,000 is 500).

The PDA function assumes the amplitude range of the source trace represents displayed trace data. If the source trace is displayed on a logarithmic scale, the amplitude range is 100 dB. If the source trace is displayed on a linear scale, the amplitude range is 10,000 measurement units.

When executing the probability function on source traces other than trace A, B, or C, assume the amplitude range of the source trace is in measurement units when selecting the resolution parameter. For example, if the amplitude range is 0 to 200 and you require twenty increments (1-10, 11-20, 21-30.... ), divide 200 by 20, then express the result (10, in this case) as a percentage of 10,000:

resolution parameter = [100 × (amplitude range /number of increments)] ÷ 10,000

.1 = (100 × 200/20) ÷ 10,000

The above equation yields a resolution parameter of 0.1.

PDA requires sufficient internal memory for operation. An error results if there is not enough memory to execute PDA.

# PDF

PROBABILITY DENSITY OF FREQUENCY

Analyze distribution of detected signals according to frequency.

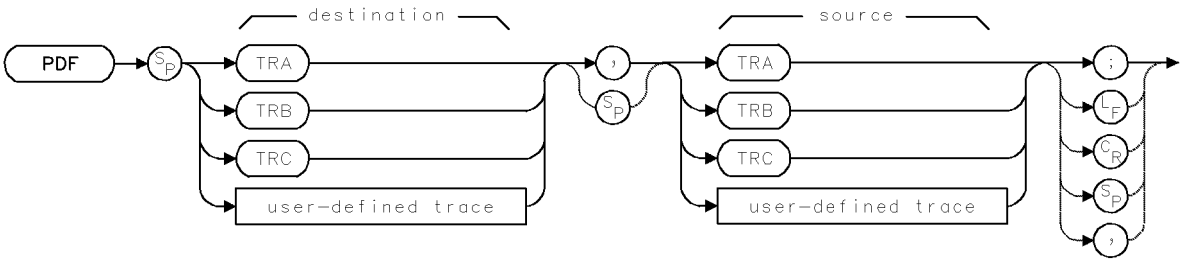


| Item | Description |
|---|---|
| Source or Destination Amplitude Range | 0 – 10,000 measurement units for linear trace data in *TRA*, *TRB*, *TRC*, *trace range*, or *user-defined trace*. –32,768 – +32,767 measurement units for logarithmic trace data in *TRA*, *TRB*, *TRC*, *trace range*, or *user-defined trace*. |
| Source-Frequency Range | Hardware dependent |
| Source-Length Range | 3 – 1024 position units. Default is 800 position units when using *TRA*, *TRB*, *TRC*. Truncated if longer than destination length. If shorter than destination length, last element is extended for operation. |
| Destination-Length Range | 3 – 1024 position units. |
| Requirements | Be sure trace data reflects one complete sweep. SNGLS and TS suggested. Requires internal memory. See Appendix D for commands that consume memory. TRDEF required when using *user-defined trace*. |
| Interdependent Commands | TH |

## Example

Determine the frequency distribution of a trace.

```
100 CLEAR 718                                  Initialize analyzer.
110 OUTPUT 718;"IP;"
120 OPTION BASE 1                              Specify lower boundary of com-
                                               puter arrays to be 1.
130 DIM A(20)                                  Dimension 20-element computer
                                               array.
140 ASSIGN @Sa TO 718                          Assign address 718 to @Sa.
150 OUTPUT @Sa;"TRDEF B_IN,20;MOV B_IN,0;"     Define 20-element user-defined trace,
                                               B_IN.
160 OUTPUT @Sa;"TRDEF P_DF,20;MOV P_DF,0;"     Define 20-element user-defined trace,
                                               P_DF. Store zero in all points of
                                               P_DF.
170 OUTPUT @Sa;"CF 300MHZ;SP 1GHZ;RB 100KHZ;"  Set measurement range.
```

```
180 OUTPUT @Sa;"SNGLS;TH -60DBM;TS;"        Activate single-sweep mode. Set
                                            threshold to −60 dBm. Sweep
                                            trace A once.
190 OUTPUT @Sa;"COMPRESS B_IN,TRA,POS;"     Compress contents of trace A and
                                            store results in B_IN.
200 OUTPUT @Sa;"PDF,P_DF,B_IN;"             If the amplitude of a point in
                                            B_IN exceeds the threshold, store
                                            a "1" in the corresponding point
                                            in P_DF.
210 OUTPUT @Sa;"TDF M;"                     Format trace-output data in mea-
                                            surement units.
220 OUTPUT @Sa;"P_DF?;"                     Return values stored in P_DF to
                                            computer.
230 ENTER @Sa;A(*)                          Store values in computer array.
240 FOR I=1 TO 20                           Print values (0 or 1).
250 PRINT A(I)
260 NEXT I
```

The PDF command augments the destination trace with the frequency-distribution function of the source trace. Elements in the source trace that are above the threshold value cause corresponding elements in the destination trace to be increased in amplitude by one measurement unit. Use the threshold command, TH, to change the threshold value. Otherwise, its default value is nine major divisions below the reference level.

# PEAKS

PEAKS

Sort detected signals from lowest frequency to highest frequency, or from lowest amplitude to highest amplitude.

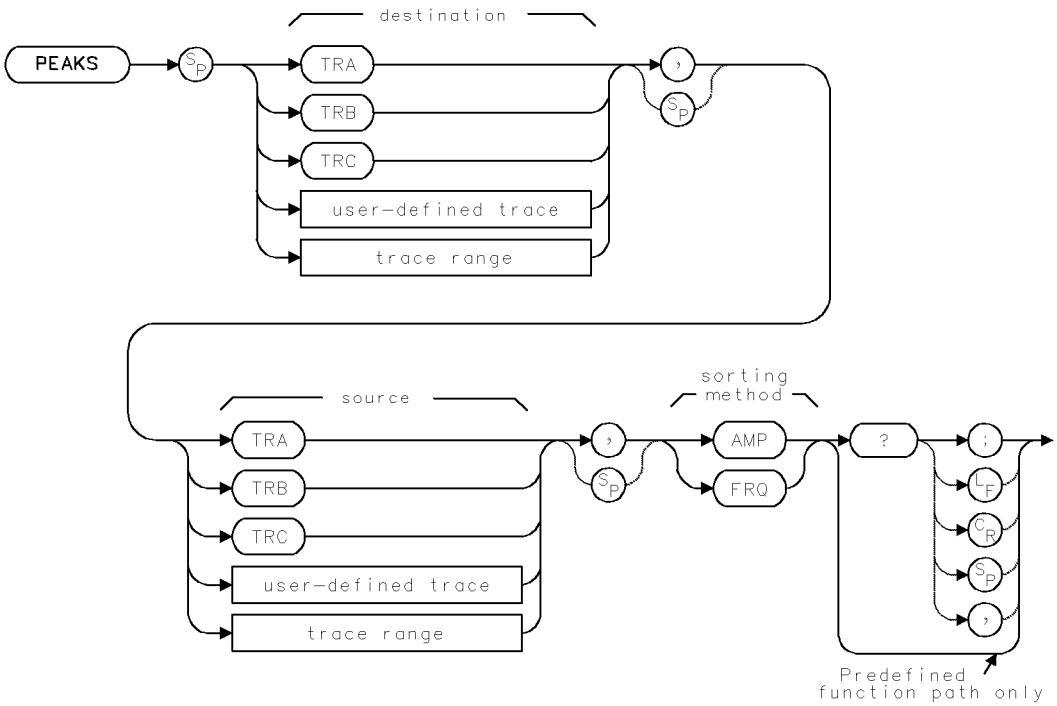

| Item | Description |
|---|---|
| Source or Destination Amplitude Range | 0 – 10,000 measurement units for linear trace data in *TRA*, *TRB*, *TRC*, *trace range*, or *user-defined trace*. –32,768 – +32,767 measurement units for logarithmic trace data in *TRA*, *TRB*, *TRC*, *trace range*, or *user-defined trace*. |
| Source-Length Range | 3 – 1024 position units. Default is 800 position units when using *TRA*, *TRB*, *TRC*. Truncated if longer than destination length. If shorter than destination length, last element is extended for operation. |
| Destination-Length Range | 3 – 1024 position units. |
| Requirements | Be sure data reflects one complete sweep when using *TRA*, *TRB*, *TRC*, or *trace range* for source. SNGLS and TS suggested. TRDEF required when using *user-defined trace*. |
| Interdependent Commands | MKPX |

## Example

Sort measured signal responses according to frequency.

```
60 OUTPUT 718;"VARDEF F_REQ,0;"                    Define user-defined variable,
                                                   F_REQ, equal to 0.
70 OUTPUT 718;"CF 900MHZ;SP 1500MHZ;RB 30KHZ;TS;"  Set the measurement range.
                                                   Sweep trace A.
80 OUTPUT 718;"TH -65DBM;MKPX 10DB;TS;"            Set the threshold to –65 dBm.
                                                   Set marker-peak excursion
                                                   to 10 dB. Sweep trace A.
90 OUTPUT 718;"PEAKS TRB,TRA,FRQ?;"                Sort signals by frequency
                                                   and place results in trace
                                                   B. Trace B now contains
                                                   position information. Re-
                                                   turn number of peaks to
                                                   computer.
100 ENTER 718;A                                    Assign number of peaks to
                                                   computer variable, A.
110 PRINT "SIGNALS ABOVE -65 DBM:";A               Print number of peaks.
120 OUTPUT 718;"MOV F_REQ,FREQU TRB[2],TRA;"       Move frequency of second
                                                   element in trace B to F_REQ.
130 OUTPUT 718;"F_REQ?;"                           Return value of F_REQ.
140 ENTER 718;F                                    Assign value to computer
                                                   variable.
150 PRINT "THE FREQUENCY OF POINT 2 IS ";F
```

The PEAKS command sorts signal peaks by frequency or amplitude, stores in the destination trace the horizontal position of each peak in position units, then computes the number of peaks found.

When sorting by frequency, PEAKS first computes the horizontal position of all peaks. These positions are consecutively loaded into the destination trace, the lowest value occupying the first element. Thus, the destination trace from left to right corresponds to signal frequencies from low to high.

When sorting by amplitude, PEAKS first computes the amplitudes of all peaks in the source trace in measurement units, and sorts these values from high to low. The horizontal positions

of the peaks are then loaded into the destination trace, with the horizontal position of the highest value occupying the first element. Thus, the destination trace amplitude, from left to right, is proportional to signal amplitudes from high to low.

The destination trace values range from 1 to the length of the source trace. If necessary, the last sorted value is repeated to fill the remaining elements of the destination trace.

PEAKS uses the current value set by the marker-peak-excursion command, MKPX, as the criterion for determining peaks.

PEAKS must be used as either a query or as a source in another analyzer-command function. Form a query by ending the PEAKS statement with a question mark (?). When used as a query, PEAKS returns the number of peaks found.

Use PEAKS as a source by incorporating the PEAKS statement into any spectrum analyzer command having *predefined function* in its syntax diagram. When PEAKS is used as a source, the number of peaks found is used for operation by the command that contains PEAKS.

## Predefined-Function Syntax

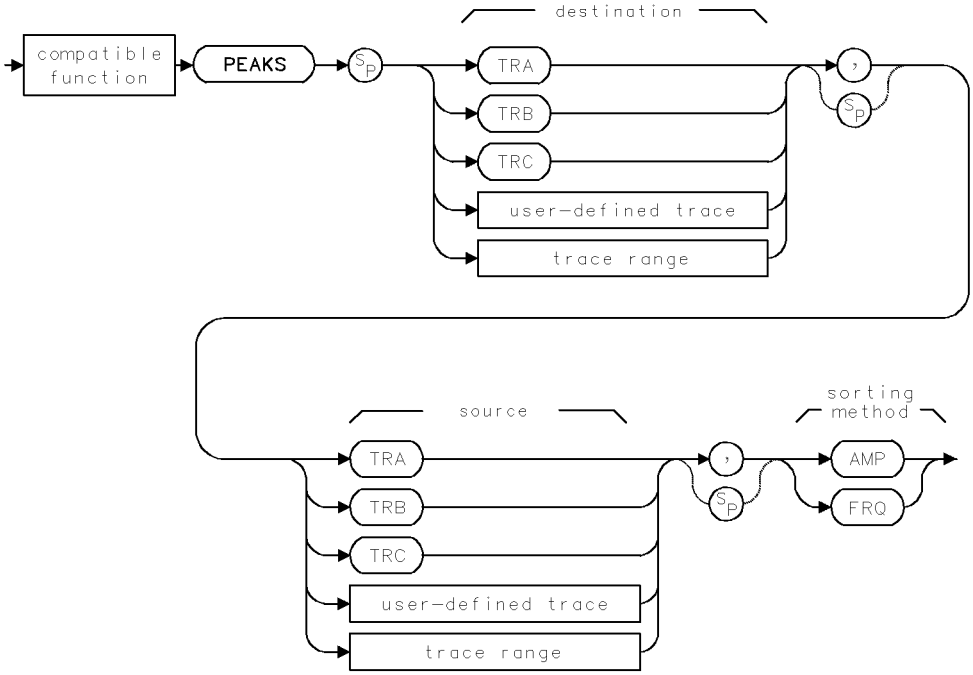


## Query Syntax

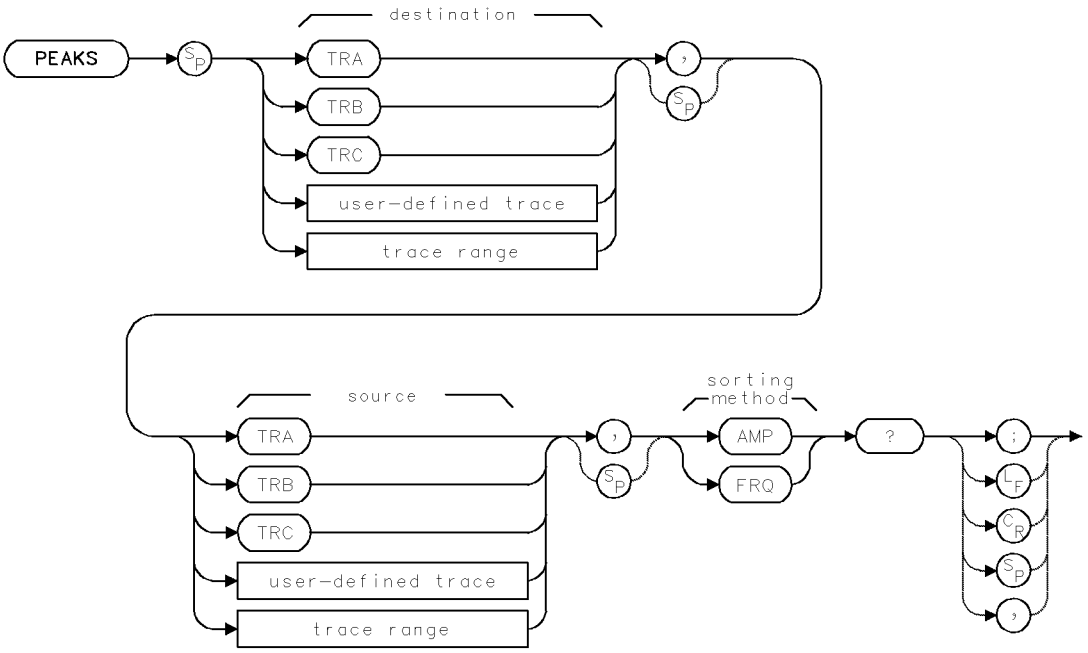


## Query Response

# PEN

SELECT PEN

Select pen for plotting on plotter.

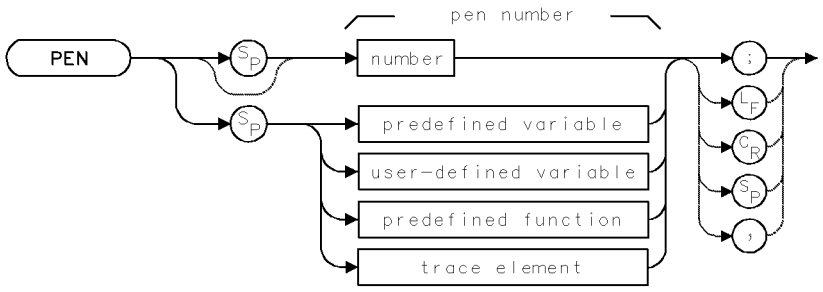


| Item | Description |
|---|---|
| Pen-Number Range | 0 – 255, depending on display model |
| Preset State | PEN 0 |
| Interdependent Commands | CLRDSP |

## Example

Assign a pen color to a graphics item.

```
150 OUTPUT 718;"CLRDSP;"            Clear user graphics.
160 OUTPUT 718;"TRDSP TRA,OFF;"     Remove trace A from display.
170 OUTPUT 718;"GRAT OFF;"          Turn off graticule.
180 OUTPUT 718;"ANNOT OFF;"         Turn off annotation.
190 OUTPUT 718;"IT 1;VW OFF;"       Define item 1 while it is off (blanked).
200 OUTPUT 718;"TEXT$Item 1$;"      Assign text to item 1.
210 OUTPUT 718;"IT 1;OR 300,700;"   Move item 1 to (300,700).
220 OUTPUT 718;"PEN 1;"             Assign pen color to item 1.
230 OUTPUT 718;"VW ON;"             Display item 1.
```

The PEN command specifies the color of objects plotted or displayed on devices having color capability. See LINET.

### Default Color Assignments for HP 70004A color display

| Pen Number | Default Color[1] | Display Assignment |
|---|---|---|
| 1 | gray | GRATICULE |
| 2 | yellow | TRACE A |
| 3 | light blue | TRACE B |
| 4 | light red | TRACE C |
| 5 | green | LINES |
| 6 | bright white | TITLES |
| 7 | gray | ANNOTATION |
| 8 | orange | ADVISE text |
| 9 | red | ERRORS |
| 10 | bright white | MARKERS |
| 11 | white | softKEY LABELS |
| 12 | white | |
| 13 | red | |
| 14 | green | |
| 15 | blue | |
| 16 | black | BACKGROUND |

1 Color can be adjusted using (DISPLAY) menus.

# PERASE

PARTIAL ERASE

Erase all **internal memory** and analyzer settings.

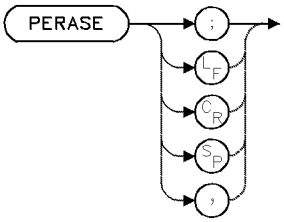


| Item | Description |
|---|---|
| Requirements | Execute `CAL ALL` after PERASE to prepare the instrument for measurements. |

The PERASE command erases all unprotected memory that resides in the spectrum analyzer. PERASE erases **internal memory**, which contains user-defined variables, traces, functions, on-end-of-sweep algorithms, amplitude-correction factors (AMPCOR), and files. (See following table for complete listing.) PERASE also sets all instrument settings and their associated predefined variables to their preset values, which are all stored in **reserved memory**.

PERASE does not erase information stored in **external memory** located on HP-IB or HP-MSIB devices, such as a disk drive or a memory card. PERASE does not erase the serial number, the correction-factor values, (USER) keys, or limit-line table parameters from **reserved memory**.

Various portions of different memories can be erased or protected against erasure with the commands summarized in the following two tables.

**Table 2-18. Commands that Erase Reserved Memory**

| Memory Components | Commands that Erase or Reset Memory | | |
|---|---|---|---|
| | PERASE | ERASE | IP |
| **correction factors (CAL)** | | X | |
| (USER) **keys (KEYDEF)** | | X | |
| **limit-line table (LIMILINE)** | | X | |
| **serial numbers** | | X | |
| **active trace data (trace A, B, or C)** | X | X | X |
| **instrument settings not stored in state registers** | X | X | X |

**Table 2-19. Commands that Erase or Protect User Memory**

| Memory Components | Commands that Erase or Reset Memory | | | Commands that Protect Memory | |
|---|---|---|---|---|---|
| | PURGE | DISPOSE* PERASE* ERASE* | NSTATE | PROTECT† | PSTATE |
| | FORMAT | | | | |
| **user-defined variable** | X | X | | X | |
| **user-defined trace** | X | X | | X | |
| **user-defined function** | X | X | | X | |
| **active user-defined function** | X | X | | X | |
| **on-end-of-sweep-algorithm** | X | X | | X | |
| **trace-amplitude correction factors** | X | X | | X | |
| **state register file (instrument settings and title line)** | X | X | X | X | X |
| **program file** | X | X | | X | |
| **trace file** | X | X | | X | |
| **(USER) keys file** | X | X | | X | |
| **Limit line file** | X | X | | X | |

* Indicates command erases internal memory only.

† Indicates command that protects internal memory only.

# PERSIST

PERSISTENCE DISPLAY

Keep the specified number of sweeps on screen.

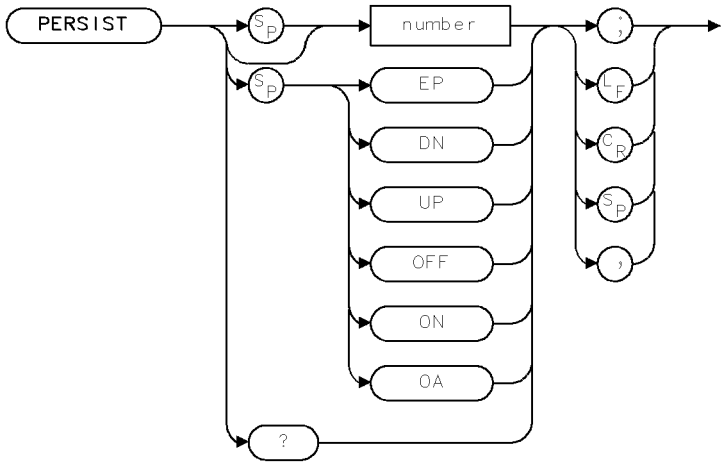


XPERS

| Item | Description |
|---|---|
| Preset State | OFF, 7 |
| Range | 1 - 7 |

The PERSIST command sets the number of previous traces to be simultaneously displayed onscreen. Overlapping points are brightened. The color map of the display is changed to a monochrome green scale.

## Query Response

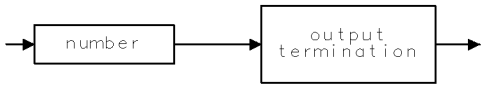


QNUM

# PINPUT

PRESET INPUT

Determine which input is active when the analyzer is in its preset state.

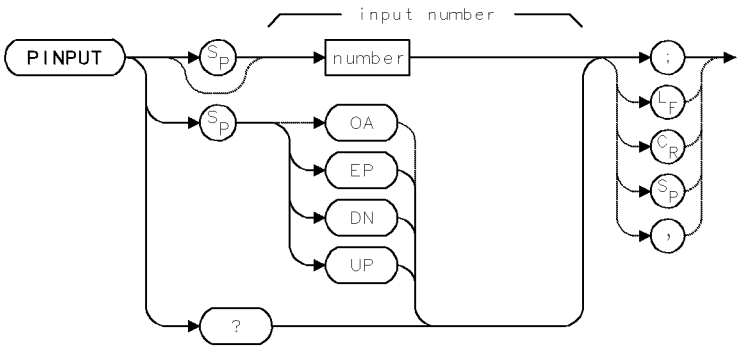


| Item | Description |
|---|---|
| Range | 1 – 100 |
| Interdependent Commands | INPUT, CAL, CNVLOSS, MODADD, MODID, CALFREQ, CALPWR, CALSRC, SRCAM, SRCAMF, SRCBLNK, SRCMOD, SRCPOFS, SRCPSTP, SRCPSWP, SRCPWR, SRCTK, SRCTKPK |

## Example

Make the RF-section input active when power is applied to a spectrum analyzer having two input ports, a preselector and an RF section. (Use caution if the RF section does not have an input attenuator. Excessive power can cause damage.)

```
10 OUTPUT 718;"PINPUT 2;"
```

The PINPUT command determines which input port is active when the analyzer is in its preset state. Input ports are numbered consecutively from 1, starting with the external-mixing-interface module. Press `select input` to learn the input numbers. Input numbers are on the key labels.

The DISPOSE and IP commands do not affect the PINPUT setting. The PINPUT setting is not included in the state information processed by the SAVES command.

## Query Response

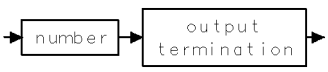

# PLOT

PLOT

Plot spectrum analyzer display on plotter.

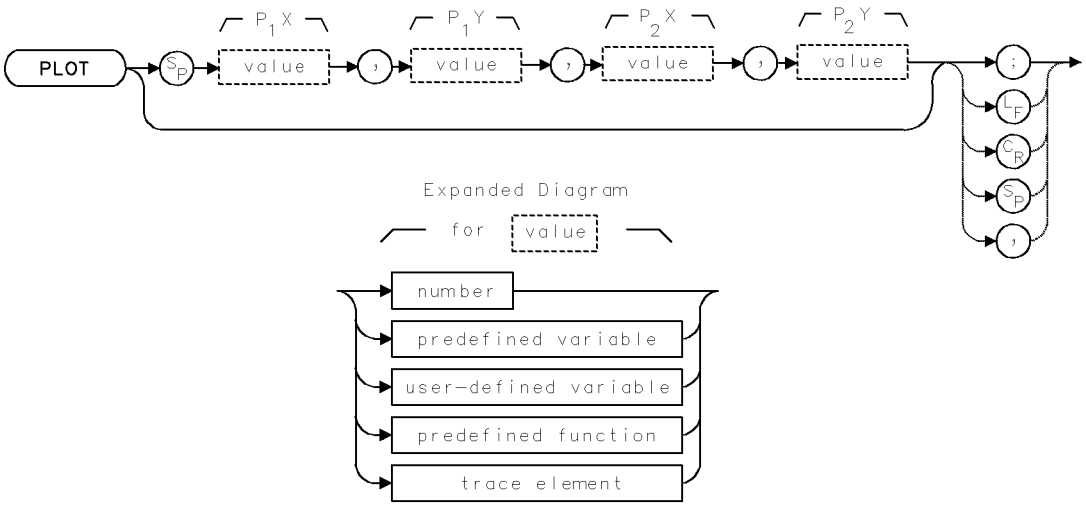


| Item | Description |
|---|---|
| $P_1X$, $P_1Y$, $P_2X$, and $P_2Y$ Range | Depends on plotting device. |

Plot the contents of the display on a plotter.

```
10 Hpib=7                                      Dump DEVICE = HP-IB PLOTTER.
20 Dsplay=4
30 Dsp=Hpib*100+Dsplay
40 Sa=Hpib*100+18
50 Plt=5
60 !
70 OUTPUT Dsp;"PI 1,0,"&VAL$(Plt)&",0;"
80 !                                           HP-IB address is 5.
90 Dummy=SPOLL(Dsp)                            Clear status register.
100 !                                          Allow all errors, SRQ when done.
110 OUTPUT Dsp;"IM 255,16,0;"
120 ON INTR Hpib GOTO Done                     When finished, GO TO ...
130 ENABLE INTR Hpib;2                         Interrupt when finished.
140 !                                          Dump plot.
150 OUTPUT Dsp;"CY 1;";
160 !                                          No CR/LF.
170 SEND Hpib;UNL LISTEN Plt TALK Dsplay DATA  Get controller off HP-IB.
180 !                                          Do not use "LOCAL 7".
190 Loop:GOTO Loop                             Wait for completion.
200 !
210 Done: !
220 OFF INTR
230 Status_byte=SPOLL(Dsp)                     Read display status.
```

```
240 IF BIT(Status_byte,4) THEN                    Bit 4 is command done.
250 DISP "DONE!"
260 ELSE
270 DISP "UNEXPECTED INTERRUPT"
280 END IF
290 !
300 END
```

The PLOT command duplicates the spectrum analyzer display on a plotter or printer.

The plotter or printer must be properly configured prior to issuing PLOT. Refer to "Creating Graphics" in Chapter 1.

$P_1X$ and $P_1Y$ , and $P_2X$ and $P_2Y$ specify the lower-left and upper-right corners of the plot, respectively. If the $P_1X$, $P_1Y$, $P_2X$ , and $P_2Y$ parameters are omitted, the parameters stored in the display module are used.

The instrument addressed with the PLOT command also must be assigned to the display keyboard. The PLOT command instructs the display to do a graphics plot dump.

Refer to the operation and programming manual for HP 70205A graphics display, HP 70206A system graphics display, or HP 70004A color display or refer to the *Display Interface Design Guide* for HP 70000 Series modular measurement systems.

Execution of the plot command is not complete until the plotter has finished plotting.

# POSU

CONVERT TO POSITION UNITS

Convert frequency or time units to **position units**.

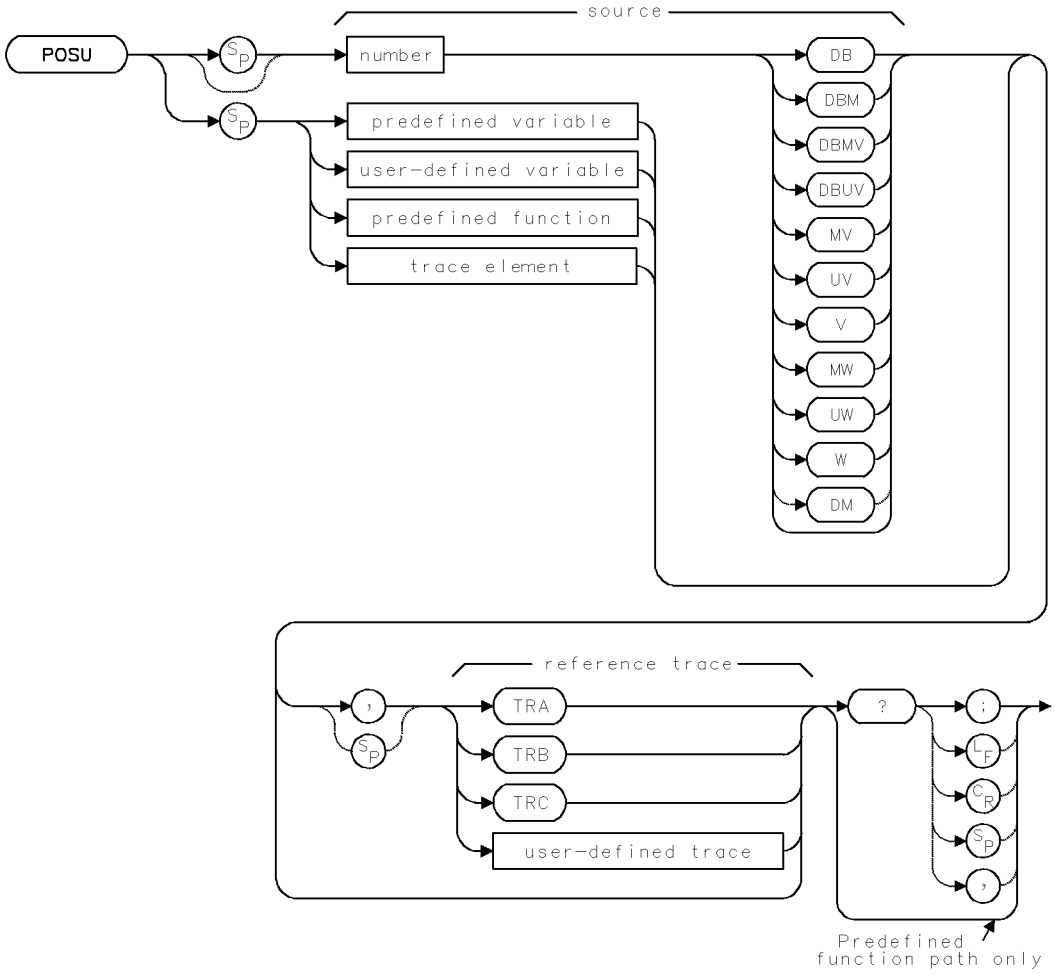

| Item | Description |
|---|---|
| Source Amplitude Range | 0 – 10,000 measurement units for linear trace data in *TRA*, *TRB*, *TRC*, *trace range*, or *user-defined trace*. −32,768 – +32,767 measurement units for logarithmic trace data in *TRA*, *TRB*, *TRC*, *trace range*, or *user-defined trace*. ± 1.8 × $10^{308}$ when using *number*, *predefined variable*, or *user-defined variable*. |
| Source Length Range | 3 – 1024 position units. Default is 800 position units when using *TRA*, *TRB*, *TRC*. Truncated if longer than destination length. If shorter than destination length, last element is extended for operation. |
| Reference-Trace-Amplitude Range | 0 – 10,000 measurement units for linear trace data in *TRA*, *TRB*, *TRC*, or *user-defined trace*. −32,768 – +32,767 measurement units for logarithmic trace data in *TRA*, *TRB*, *TRC*, or *user-defined trace*. |
| Reference-Trace-Length Range | 3 – 1024 position units. Default is 800 position units when using *TRA*, *TRB*, *TRC*. |
| Requirements | Be sure trace data reflects one complete sweep. SNGLS and TS suggested. TRDEF required when using *user-defined trace*. VARDEF required when using *user-defined variable*. |

## Example

Use POSU and MEASU in conjunction with the PA command.

```
160 OUTPUT 718;"CLRDSP;"                                    Clear user graphics from memory.
170 OUTPUT 718;"SCALE 0,800,-11003,502;"                    Define the units for scale. Set the minimum and maximum values for the X axis to 0 and 800, and the Y axis to −11003 and 502.
180 OUTPUT 718;"TRDSP TRA,OFF;"                             Turn off trace A.
190 OUTPUT 718;"PU;PA 0,MEASU -37DBM,TRA;"                  Lift up pen. Move pen to edge of the graticule at −37 dBm.
200 OUTPUT 718;"PD;PA POSU 1GHZ,TRA,MEASU -62DBM,TRA;"      Place pen down. Draw to the point at 1 GHz and −62 dBm.
210 OUTPUT 718;"PU;PA 0,MEASU -25DBM,TRA;"                  Place pen up. Move it to the left edge of the graticule.
220 OUTPUT 718;"PD;PA 800,MEASU -30DBM,TRA;"                Draw a line to the right edge of the graticule, ending at −30 dBm.
```

**POSU**

The POSU command converts frequency or time values to position-unit values. **Position units** describe the position of a point along the horizontal axis of a trace. The point at the left end of the trace has a position-unit value of 1. The point at the right end of an 800-point trace has a position-unit value of 800.

POSU converts the frequency of the reference-trace element to position units when the trace is displayed in frequency spans greater than zero. For spans equal to zero, POSU converts the sweep-time position of the trace element to position units.

If the reference trace is not specified, the last active trace is assumed to be the reference trace.

POSU must be used as either a query or as a source in another analyzer-command function. Form a query by ending the POSU statement with a question mark (?). When used as a query, POSU returns the position-unit value of the source.

Use POSU as a source by incorporating the POSU statement into any spectrum analyzer command containing *predefined function* in its syntax diagram. When POSU is used as a source, the position-unit value of the source is used for operation by the command that contains POSU.

## Predefined-Function Syntax

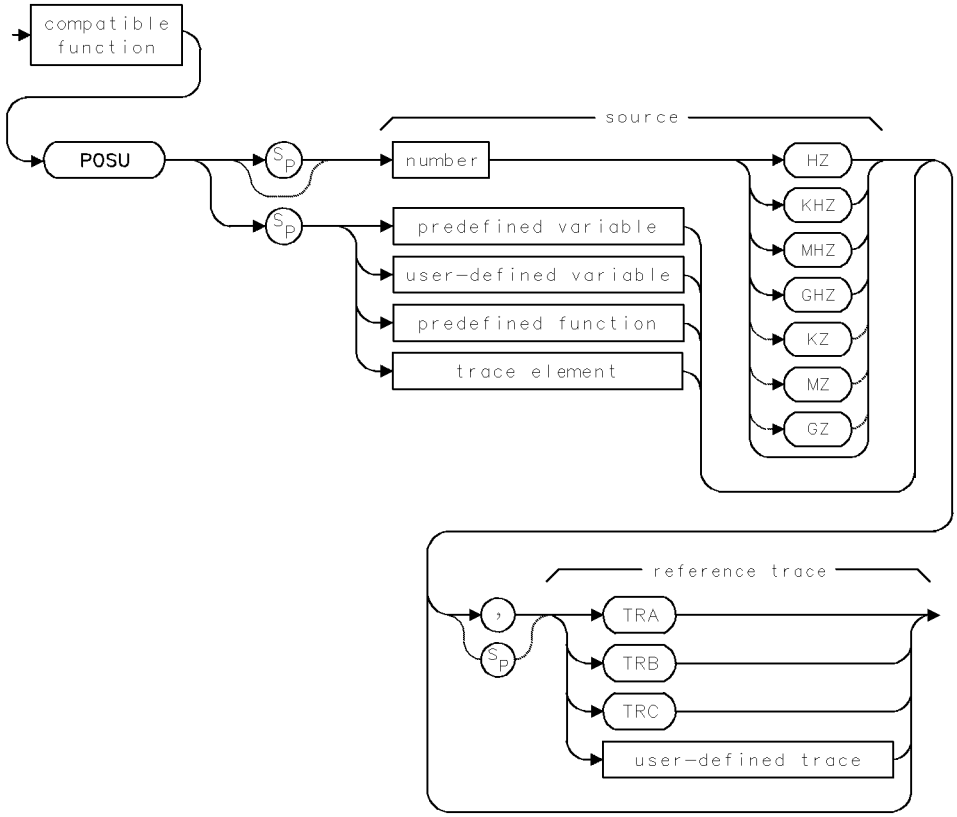

## Query Syntax

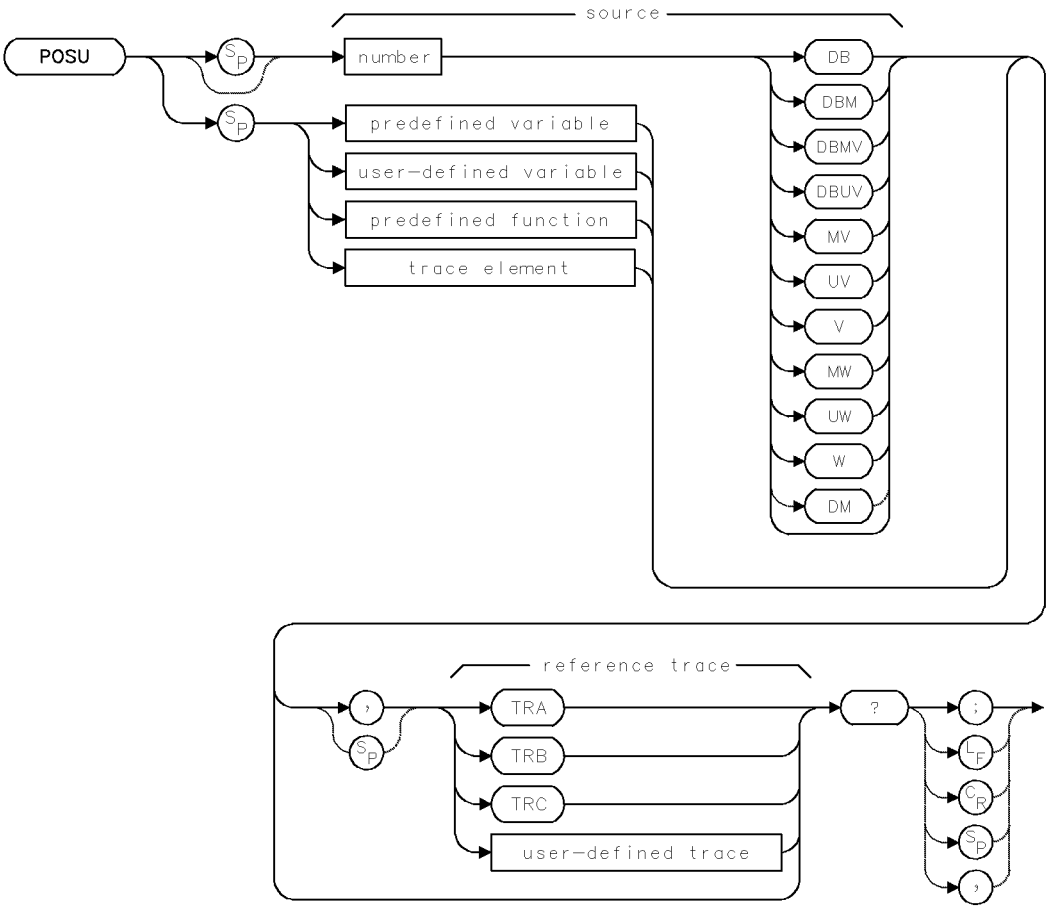


## Query Response

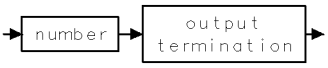

# POWERON

POWER ON STATE

Specify the analyzer's state at power-on.

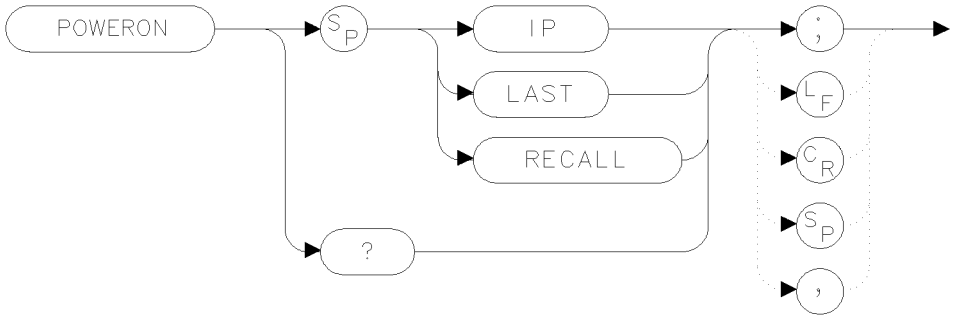


xpower

## Example

```
120 OUTPUT 723;"POWERON LAST;"
```

*Recall at power-on the state the analyzer was in when power was removed.*

The POWERON command specifies the state the analyzer will be in when power is applied.

| Argument | Definition |
|---|---|
| IP | Places the analyzer in its preset state when power is applied. |
| LAST | Recalls at power-on the state the analyzer was in when power was removed (the exception is that the mass-storage device is set to internal memory). |
| RECALL | Recalls state 0 at power-on. If state 0 has not been saved, and so does not exist, warning message 16006 is displayed when `POWERON RECALL` is executed. |

## Query Response

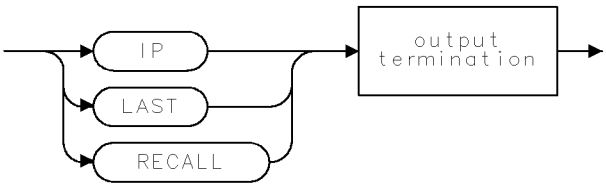


qpower

# PP

PRESELECTOR PEAK

Adjust tracking of preselector to improve amplitude accuracy.

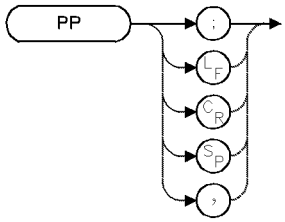


| Item | Description |
|---|---|
| Requirements | Sweep measurement range once when measuring spans greater than 0 Hz before executing PP. SNGLS and TS suggested. Sweep measurement range after executing PP. |
| Interdependent Commands | MKA, PRSDAC, PRSHYST, PRSENABL, MKPX, and frequency functions, such as FA, FB, CF, SP, LOSTART, LOSTOP, FS, FOFFSET, HNLOCK |

## Example

Peak the preselector tracking.

```
10 OUTPUT 718;"PP;"
```

The PP command adjusts the tracking of the preselector to yield maximum amplitude accuracy at the active marker position. If a marker is not present, PP places one at the highest signal on display.

Each time the preselector is peaked, a value is stored in the preselector digital-to-analog converter (DAC). Up to four values can be stored, one for each of four frequency ranges:

- 2.7 GHz to 6.2 GHz
- 6.0 GHz to 12.7 GHz
- 12.5 GHz to 19.9 GHz
- 19.7 GHz to 22.0 GHz

Whenever a measurement is made, the current preselector-DAC value corresponding to the measurement range determines the preselector tracking. Execute PP to re-peak the preselector and store a new value in the preselector DAC.

When measuring frequency spans greater than zero, the analyzer must be swept at least once to peak the preselector when measuring with slow sweep times. To execute the peaking function quickly, change the span to zero (`SP 0`) before executing `PP`.

See PRSDAC, PRSENABL, and PRSHYST.

# PR

PLOT RELATIVE

Move pen to coordinate relative to current pen position.

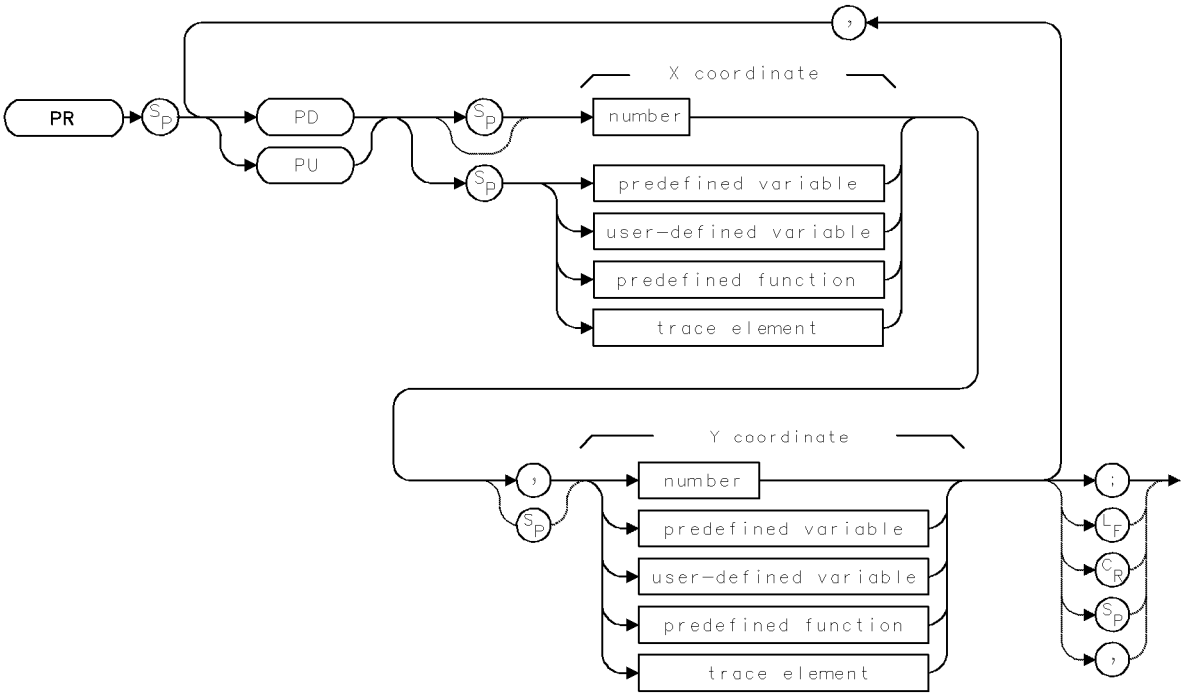


| Item | Description |
|---|---|
| X-Coordinate Range | Determined by SCALE or DWINDOW |
| Y-Coordinate Range | Determined by SCALE or DWINDOW |
| Requirements | VARDEF when using *user-defined variable*. |
| Interdependent Commands | LINET, OR, PEN, SCALE, DWINDOW, IT, PU, PD, GRID, MK, GRAPH |

## Example

Draw a line on the analyzer display.

```
110 OUTPUT 718;"CLRDSP;"
120 OUTPUT 718;"PD;PR 800,600,-500,100;"
```

*Clear graphics from memory.*
*Place pen down. Move pen 800 units to the right and 600 units up from its current position, then move pen 500 units to the left, and 100 units up.*

The PR command moves the graphics pen relative to its current position. A line is drawn on the analyzer display if the pen is down. Positions are specified as coordinates in scale units, which are set by the SCALE command or by the DWINDOW command if a graphics window is on.

# PREAMP

PREAMPLIFIER

Select system preamplifier.

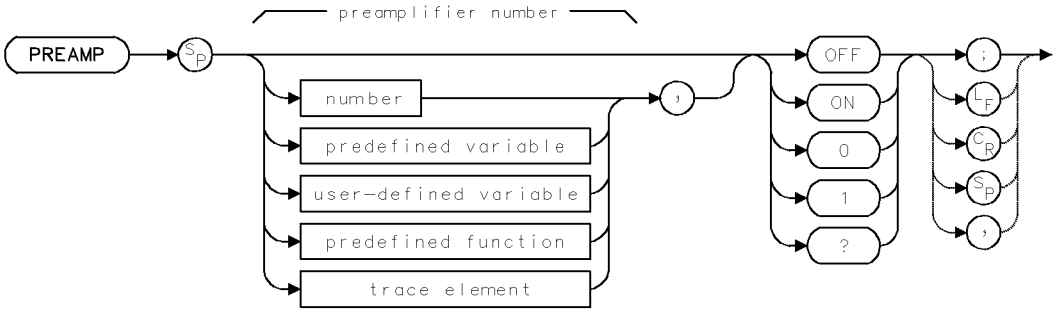


| Item | Description |
|---|---|
| Preamplifier-Number Range | 1 to number of preamplifiers in system |
| Preset State | PREAMP OFF;PREAMP 1 |

## Example

Bypass preamplifier.

```
200 OUTPUT 718;"PREAMP OFF;"
```

The preamplifier-enable command turns on and off the preamplifier modules. If more than one preamplifier module is present, specify the desired preamplifier by its number. If a number is not specified, preamplifier number 1 is selected.

Follow this procedure to determine the preamplifier number:

1. Press MENU
2. Press State, MORE 1 of 3
3. Press preamp control
4. Observe the preamplifier number on its corresponding key. The active status indicator, ACT, located on the front panel of the preamplifier, lights when its input port is active.

## Query Response

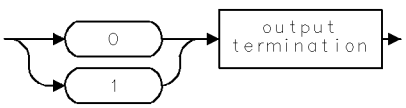

# PREFX

PREFIX

Change the file prefix that identifies user-memory entries.

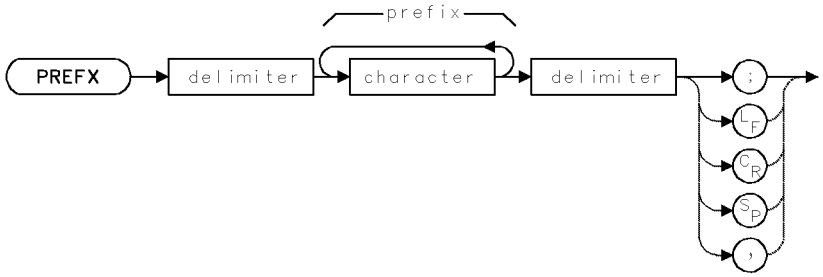


| Item | Description |
|---|---|
| Prefix Range | 0 – 8 characters |
| Requirements | If executed, must precede store and save commands: LIMISAV, SAVED, SAVES, SAVET, SAVEU, STOR |
| Interdependent Commands | RCLD, RCLS, RCLT, RCLU, LOAD, DISPOSE, FORMAT, ERASE, PERASE |

The PREFX command changes the lettering of the prefix that is appended to file numbers when the SAVED, SAVES, SAVET, and SAVEU commands (or corresponding keys) store articles in user memory. The following table shows the default prefixes.

**Table 2-20. User Memory Contents**

| Article Stored | Storing Command | File Prefix for Entry in User-Memory Catalog |
|---|---|---|
| file containing user-key menu | SAVEU | u_ |
| file containing trace | SAVET | t_ |
| file containing user-defined variable* | SAVED | d_ |
| file containing user-defined function* | SAVED | d_ |
| file containing on-end-of-sweep algorithm* | SAVED | d_ |
| file containing limit line | LIMISAV | l_ |
| file containing state register (instrument settings and title-line) | SAVES | s_ |
| * Cannot be stored in internal memory. | | |

For example, executing `SAVEU 10` stores a file in user memory that is listed in the user-memory catalog as

u_10

The "u_" is the prefix. The "10" is the file number. However, executing `PREFX $MARCH$;SAVEU 10;` changes the prefix to

uMARCH_10

Notice that the prefix is inserted between the "u" and the "_".

The recall and load commands (RCLD, RCLT, RCLS, LIMIRCL, RCLU, and LOAD) require the complete file name, which includes both the prefix and the file number. To verify file names, press `State`, recall, `catalog & MSI` to view the catalog of user memory, which is the currently selected storage device. (See MSI.)

# PROTECT

PROTECT

Protect contents of **internal memory**.

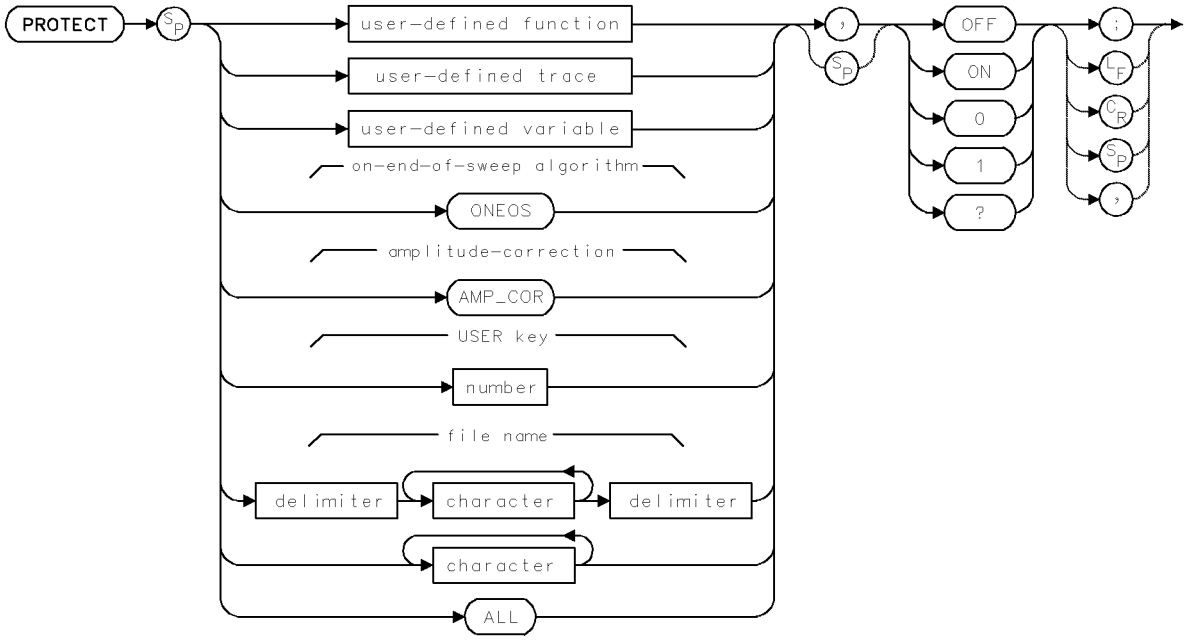


| Item | Description |
|---|---|
| Range | For *user-defined trace*, *user-defined function*, or *user-defined variable*, range is 1 – 12 characters: A – Z, 0 – 9, and underscore (_). First character must be a letter. Numbers must be preceded by underscore. For *number*, range is integers, 1 – 14. |
| Requirements | Delimiters required before and after *file name* when it contains a number or lower-case letters. When *file name* is upper-case alpha characters only, delimiters are optional. |
| | VARDEF required when using *user-defined variable*. TRDEF required when using *user-defined trace*. FUNCDEF required when using *user-defined function*. |
| Interdependent Commands | ACTDEF, AMPCOR, DISPOSE, FUNCDEF, LIMISAV, LOAD, ONEOS, PERASE, SAVES, SAVET, SAVEU, STOR, VARDEF |

## Example

Protect a user-defined function against accidental erasure.

```
10 OUTPUT 718;"PROTECT DLP,ON;"    Protect a stored user-defined function called DLP.
```

The PROTECT command prevents the disposal or redefinition of allocated **internal memory**. `PROTECT ALL` protects the entire contents of internal memory against erasure or overwriting by the following commands.

- ACTDEF (active user-defined function)
- AMPCOR (amplitude correction factors)
- DISPOSE (Erases articles in this list.)
- FORMAT
- FUNCDEF (user-defined functions)
- KEYDEF (user-defined key)
- LIMILINE (user-defined traces, LIMIT_HI and LIMIT_LO)
- LIMISAV (limit-line files)
- LOAD (Load files and articles into internal memory.)
- ONEOS (on-end-of-sweep algorithm)
- PERASE (partial erase)
- SAVES (state-register file)
- SAVEU (USER keys file)
- SAVET (trace file)
- STOR (Store any file.)
- TRDEF (user-defined trace)

---

**Note** PROTECT does not prevent erasure by the ERASE or PURGE command

---

To selectively protect an article, specify the article name or number, as indicated in the syntax diagram. To discontinue protection, execute `PROTECT OFF`. The following table summarizes commands that protect or alter the different memories available, including internal memory.

**Table 2-21.**
**Commands that Erase or Protect User Memory**

| Memory Components | Commands that Erase or Reset Memory | | | Commands that Protect Memory | |
|---|---|---|---|---|---|
| | PURGE<br>FORMAT | DISPOSE*<br>PERASE*<br>ERASE* | NSTATE | PROTECT† | PSTATE |
| **user-defined variable (VARDEF, LOAD)** | X | X | | X | |
| **user-defined trace (TRDEF, LIMILINE)** | X | X | | X | |
| **user-defined function (FUNCDEF, LOAD)** | X | X | | X | |
| **active user-defined function (ACTDEF, LOAD)** | X | X | | X | |
| **on-end-of-sweep-algorithm (ONEOS, LOAD)** | X | X | | X | |
| **trace-amplitude correction factors (AMPCOR)** | X | X | | X | |
| **state register file (instrument settings and title line, SAVES, STOR** | X | X | X | X | X |
| **program file (SAVED, STOR)** | X | X | | X | |
| **trace file (SAVET, STOR)** | X | X | | X | |
| **(USER) keys file** (SAVEU, STOR) | X | X | | X | |
| **Limit line file** (LIMISAV, STOR) | X | X | | X | |

* indicates command erases internal memory only.
†indicates command that protects internal memory only.

## Query Response

`PROTECT ALL?` returns a 1 if any part of internal memory is protected.

If all of internal memory is unprotected, `PROTECT ALL?` returns a 0.

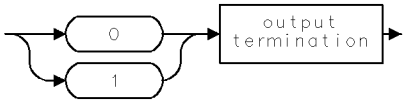

# PRSDAC

PRESELECTOR DAC

Choose preselector bias for the preselector module.

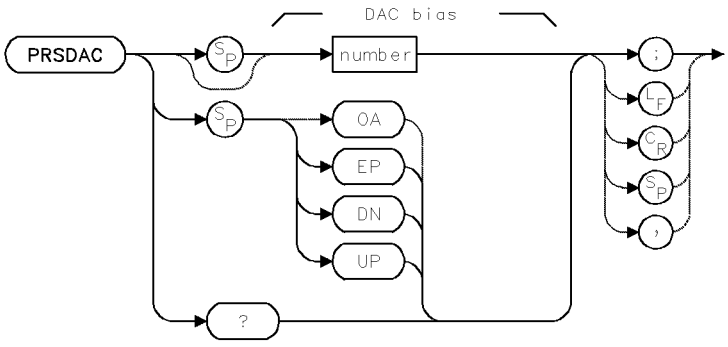


| Item | Description |
|---|---|
| DAC Range | 0 to hardware limit |
| Step Increment | 15 |
| Requirements | Sweep measurement range after executing PRSDAC. |
| Restrictions | Does not operate on the preselector in the HP 70908 RF Section. |
| Interdependent Commands | PP |
| Preset State | Midrange value of DAC output. |

## Example

Directly control the tracking of the HP 70600A preselector by specifying the preselector-DAC value.

```
10 OUTPUT 718;"PRSDAC 5;"
```

The PRSDAC command enters a value into the preselector digital-to-analog converter (DAC). The value entered determines preselector tracking for one of four frequency ranges specified by the position of the active marker:

- 2.7 GHz to 6.2 GHz
- 6.0 GHz to 12.7 GHz
- 12.5 GHz to 19.9 GHz
- 19.7 GHz to 22.0 GHz

The preselector DAC values override the adjustments made by the PP command. If a marker is not present, PRSDAC places the active marker at the highest signal level. Use PRSDAC to peak signal responses at particular frequencies. See PRSENABL, PRSHYST, and PP.

## Query Response

# PRSENABL

PRESELECTOR ENABLE

Bypass preselection.

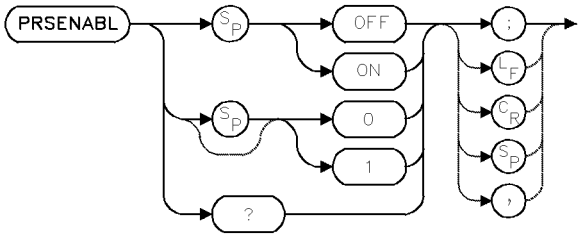


| Item | Description |
|---|---|
| Restrictions | Does not operate on the preselector in the HP 70908 RF Section. |
| Interdependent Commands | PP |
| Preset State | PRSENABL ON |

## Example

Bypass the preselection in the HP 70600A preselector or in the HP 70910A RF section.

```
10 OUTPUT 718;"PRSENABL OFF;"
```

The PRSENABL command bypasses the preselector and low-pass filter and improves sensitivity by 8 to 15 dB, depending on the frequency band. During normal operation, these filters are not bypassed in order to minimize the presence of distortion products and image signals.

The PRSENABL command does not affect error-correction achieved by the CAL command. The PRSENABL command does not operate on some preselectors, such as the preselector in the HP 70908 RF Section. PRSENABL does operate on the HP 70600A preselector or HP 70601A preselector.

## Query Response

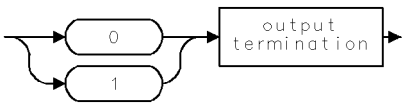

# PRSHYST

PRESELECTOR HYSTERESIS

Erase hysteresis that affects preselector tracking.

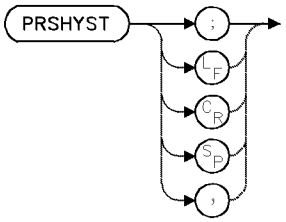


| Item | Description |
|---|---|
| Restrictions | Does not operate on the preselector in the HP 70908 RF Section. |
| Interdependent Commands | PP |

## Example

Erase preselector hysteresis.

```
10 CLEAR 718                              Initialize analyzer.
20 OUTPUT 718;"IP;"
30 OUTPUT 718;"SP 10MHZ;CF 20MHZ;TS;"     Set measurement range.
40 OUTPUT 718;"CF 40MHZ;"                 Change center frequency.
50 OUTPUT 718;"PRSHYST;TS;"               Erase hysteresis.
```

The PRSHYST command returns preselector tuning to a neutral state by compensating for hysteresis. Use PRSHYST when changing the center frequency by values greater than the span when the span is less than 100 MHz. Follow this procedure:

1. Change center frequency.
2. Execute PRSHYST.
3. Sweep the measurement range once.

Not all modular spectrum analyzers require the erasure of preselector hysteresis. Measurements made with the HP 70600A preselector do require the use of PRSHYST. Measurements made with the HP 70908A RF section do not.

# PSTATE

PROTECT STATE

Protect state-register files stored in **user memory** against erasure or over-writing by NSTATE, LOAD, STOR, or SAVES command.

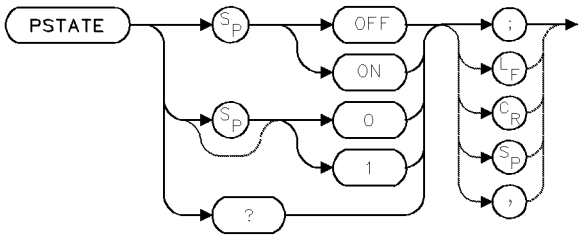


| Item | Description |
|---|---|
| Interdependent Commands | NSTATE, STOR, LOAD, SAVES |

## Example

Control state-register protection.

```
10 CLEAR 718                    Initialize analyzer.
20 OUTPUT 718;"IP;"
30 OUTPUT 718;"PSTATE OFF;"     Turn off state-register protection.
40 OUTPUT 718;"NSTATE 3;"       Make 3 state registers available for storing instrument
                                states.
50 OUTPUT 718;"PSTATE ON;"      Turn on state-register protection.
60 OUTPUT 718;"SAVES 2;"        Attempt to save instrument state in register 2.
```

The PSTATE command protects the contents of the state-register files from accidental erasure or over-writing by the STOR, NSTATE, or SAVES commands. See PROTECT.

**Note** PSTATE does not prevent erasure of register contents with the ERASE, FORMAT, PERASE, or PURGE command.

## Query Response

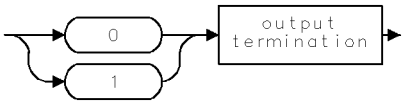

# PU

PEN UP

Place pen up.

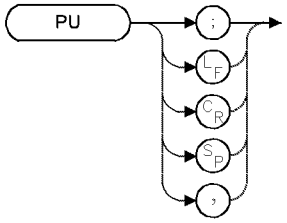


| Item | Description |
|---|---|
| Interdependent Commands | PA, PR, GRID, MK, GRAPH, DSPLY, LINET |
| Preset State | Active. Pen is up. |

## Example

Relocate graphics pen without drawing.

```
130 OUTPUT 718;"CLRDSP;"              Clear graphics from memory.
140 OUTPUT 718;"PU;PA 500,500;"       Lift pen. Move pen to (500,500).
150 OUTPUT 718;"PD;PA 1000,1000;"     Place pen down. Draw line to upper-right
                                      corner.
160 OUTPUT 718;"PA PU 0,1000;"        Move pen to upper-left corner with pen in the up
                                      position. (See syntax diagram for PA.)
170 OUTPUT 718;"PD;PA 1000,0;"        Place pen down and draw line to lower-right
                                      corner.
```

The PU command “lifts up” the graphics pen from the analyzer display. Use PU to move the pen position with the PA and PR commands without drawing on the analyzer display. See “Creating Graphics” in the Programming Fundamentals chapter.

# PURGE

PURGE FILE

Erase file from user memory.

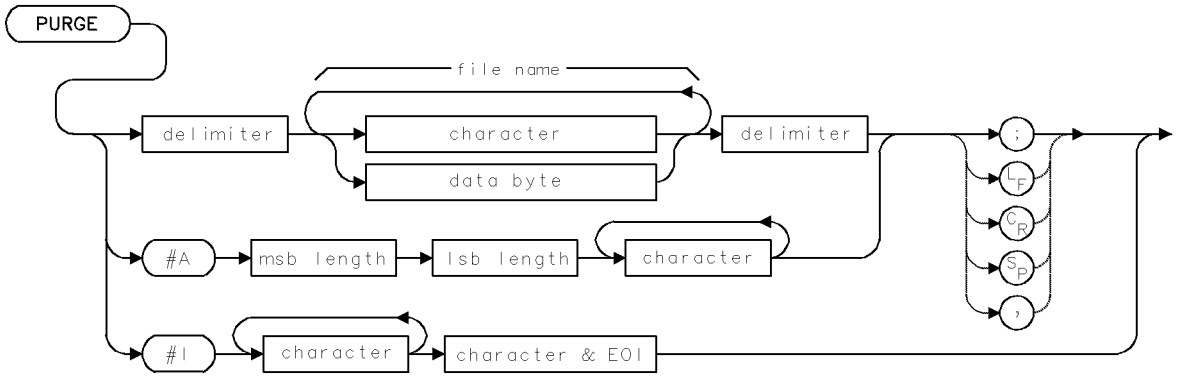


| Item | Description |
|---|---|
| Number of characters | 0 – 36 |

The PURGE command erases files from internal or external memory, regardless of protection asserted by the PSTATE or PROTECT command. To purge a file, enter its complete name as it is listed in the catalog of user memory. To verify file names, press `State`, recall, `catalog & MSI` to view the catalog of user memory, which is the currently selected storage device. (See MSI.)

# PWRAVG

POWER AVERAGE

Control video averaging of the power meter value.

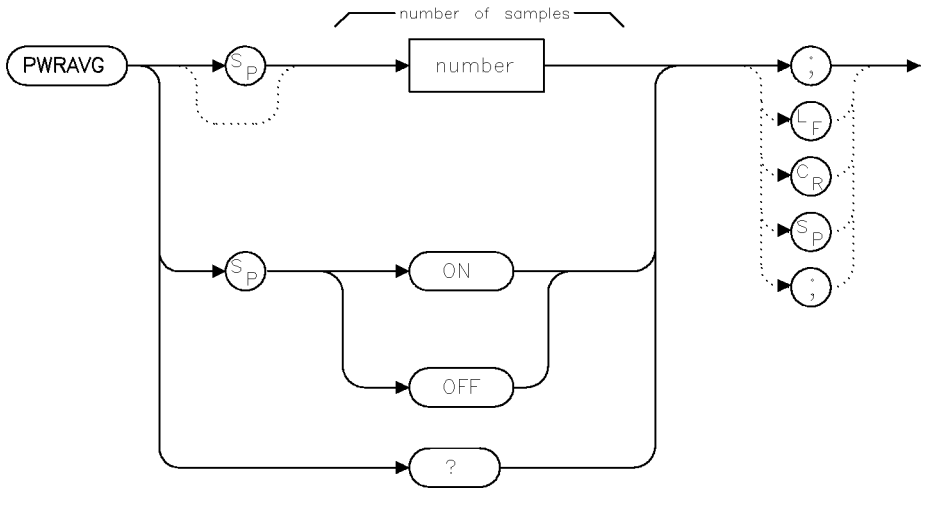


| Item | Description |
|---|---|
| Range | 1..1E4 |
| Inter-Dependent Commands | CLRPAVG, CPLAVG, VAVG |
| Preset State | 100 |

## Example

```
PWRAVG ON;   Turn power meter averaging on.
PWRAVG OFF;  Turn power meter averaging off.
PWRAVG 25;   Moving average over 25 samples.
PWRAVG?      Report the current desired average count.
```

PWRAVG does for power meter readings what VAVG does for traces. The main difference is the operation during single sweep mode. A TS during single sweep mode will not cause the power meter average counter to be reset, nor will the power meter average count affect the number of sweeps taken.

The VAVG and PWRAVG counts are displayed in the middle left of the graticule area. The VAVG count is preceeded by the label “VIDAVG” and the PWRAVG count is preceeded by the label “PWRAVG”.

The rate at which the average count increments for PWRAVG and VAVG may differ since multiple power meter readings may be taken per sweep.

If an attempt is made to turn PWRAVG for a signal path which does not have a power meter, a “Hardware not present” error will be reported.

## Query Response

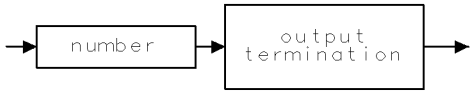


qgennum

# PWRBAR

POWER BAR

Return a measured value of optical power.

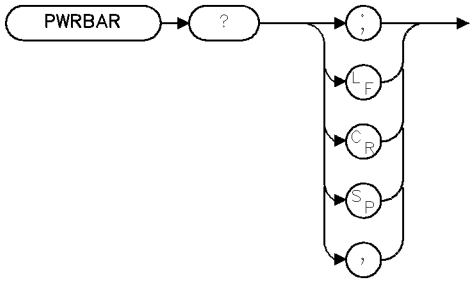


XPWRBA

| Item | Description |
|---|---|
| Requirements | Requires a lightwave module. |
| Interdependent Commands | OPTPWR, INPUT |

## Example

```
10 OUTPUT 718;"PWRBAR?;"     Ask for average power reading.
20 ENTER 718;Pwrbar          Read reply.
```

The PWRBAR query returns a measured value of average power. The measurement is started when the query is received. The power bar does not have to be displayed in order to be queried.

Power is returned in the current AUNITS. If the signal-to-noise ratio is insufficient to make an accurate measurement, a power level of −300 dBm is returned. This can often be remedied by decreasing the attenuation (AT), which will result in more signal at the input. Lowering the reference level will also reduce the attenuation if the attenuator is auto-coupled.

If the power meter is overranged (too much input), an inaccurate reading will result. The overrange bit in the status-byte (STB?, or serial poll on HP-IB) will indicate this condition. The request service mask (RQS) can also be set to cause an RQS on HP-IB whenever the power meter goes overrange. This situation can be remedied by increasing the attenuation, or reference level (if AT AUTO is in effect).

## Query Response

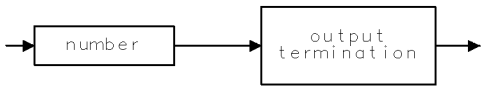


QNUM

# PWRBARON

POWER BAR ON/OFF

Turn the power bar display on or off.

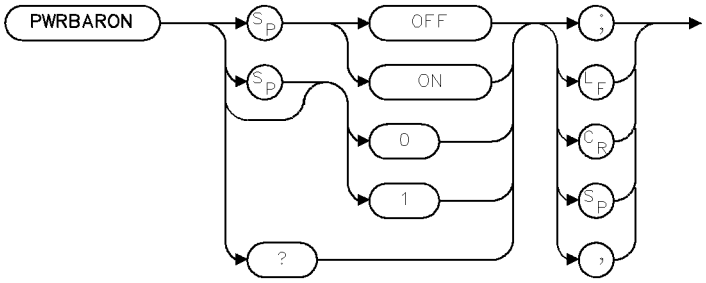


XPBRON

| Item | Description |
|---|---|
| Requirements | Requires a power meter in the signal path. |
| Preset State | ON (if power meter is available) |
| Interdependent Commands | OPTPWR, PWRBAR |

## Example

```
10 OUTPUT 718;"PWRBARON 1;"
20 OUTPUT 718;"PWRBARON?;"
```

The PWRBARON command turns the display of the power bar on or off. The screen is rescaled and redrawn if necessary.

## Query Response

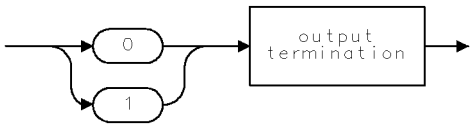


QGO1

# PWRBW

POWER BANDWIDTH

Compute the bandwidth that contains a percentage of the total measured power.

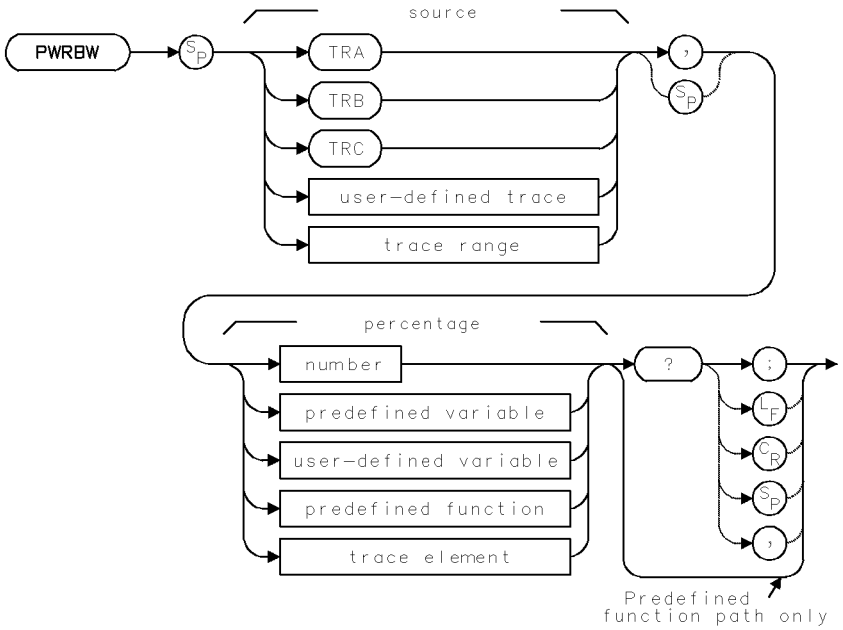


| Item | Description |
|---|---|
| Source-Amplitude Range | 0 – 10,000 measurement units for linear trace data in *TRA*, *TRB*, *TRC*, *trace range*, or *user-defined trace*. –32,768 – +32,767 measurement units for logarithmic trace data in *TRA*, *TRB*, *TRC*, *trace range*, or *user-defined trace*. $\pm 1.8 \times 10^{308}$ when using *predefined variable* or *user-defined variable*. |
| Percentage Range | 0 – 100 |
| Source Length Range | 3 – 1024 position units. Default is 800 position units when using *TRA*, *TRB*, *TRC*. Truncated if longer than destination length. If shorter than destination length, last element is extended for operation. |
| Requirements | Be sure data reflects one complete sweep when using *TRA*, *TRB*, *TRC*, or *trace range* for source. SNGLS and TS suggested. TRDEF required when using *user-defined trace*. VARDEF required when using *user-defined variable*. |
| Interdependent Commands | Any commands which affect measured power level, such as RB, SP, or TS |

## Example

Use the PWRBW command to compute the bandwidth containing 99% of the total power.

```
130 OUTPUT 718;"SNGLS;"                          Activate single-sweep mode.
140 OUTPUT 718;"CF 300MHZ;SP 1MHZ;RB 300KHZ;"    Set measurement range.
150 OUTPUT 718;"MXMH TRA;TS;TS;TS;TS;"           Activate maximum-hold mode.
                                                 Sweep trace A four times.
160 OUTPUT 718;"PWRBW TRA,99.0?;"                Return bandwidth containing 99%
                                                 of the power contained in full
                                                 span.
170 ENTER 718;P                                  Assign value to computer vari-
                                                 able.
```

The PWRBW command first computes the combined power of all signal responses contained in a trace array, then calculates the bandwidth which contains a percentage of the total power. For example, if 100% is specified, the power bandwidth equals the frequency range of the trace data, which equals the span setting. If 50% is specified, trace elements are eliminated from either end of the array, until the combined power of the remaining signal responses equals half of the total power. The frequency span of these remaining trace elements is the power bandwidth returned, centered around the center frequency. The PWRBW command does not alter the contents of the source trace.

PWRBW must be used as either a query or as a source in another spectrum analyzer command. Form a query by ending the PWRBW statement with a question mark (?). When used as a query, PWRBW returns the bandwidth equal to a percentage of the total power. Use PWRBW as a source by incorporating the PWRBW statement into any spectrum analyzer command containing *predefined function* in its syntax diagram. When PWRBW is used as a source, the bandwidth value is used for operation by the command that contains PWRBW. See "Using Predefined Functions as Sources" under "Math Functions, Variables, and Trace Arrays" in the Programming Fundamentals chapter.

## Predefined Function Syntax

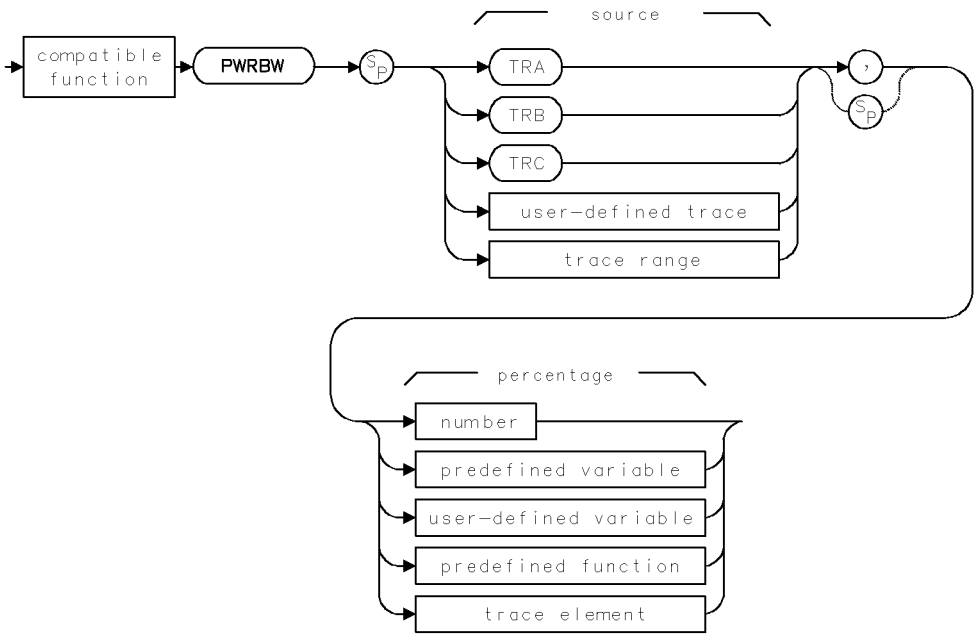

## Query Syntax

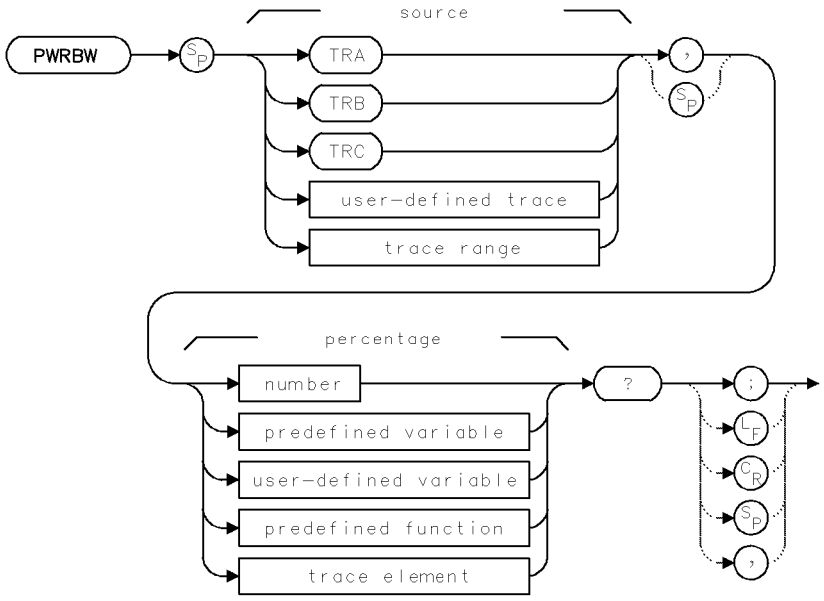


## Query Response

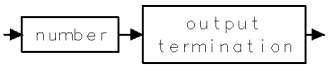

# PWRMODE

POWER BAR MODE

Control the scale for the power bar.

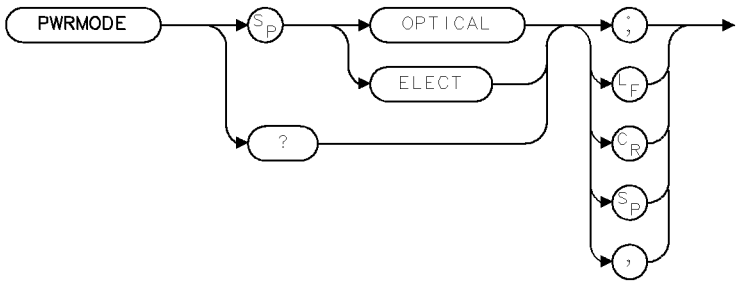


XPWRMD

| Item | Description |
|---|---|
| Requirements | Requires a lightwave module. |
| Preset State | OPTICAL |
| Interdependent Commands | INPUT, OPTPWR, PWRBAR, PWRBARON |

## Example

```
10 OUTPUT 718;"PWRMODE OPTICAL;"
20 OUTPUT 718;"PWRMODE?;"
```

The PWRMODE command controls the scale for the power bar annunciator and the OPTPWR and PWRBAR queries. Since the displayed power bar remains in the scale of the trace (see OPTMODE), mixed displays are allowed. For example, the power bar may be displayed in electrical units and the annunciator displayed in optical units.

## Query Response

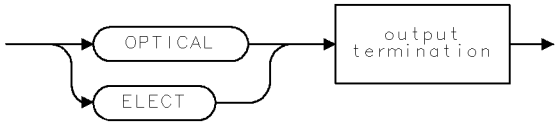


QPWRMD

# RB

RESOLUTION BANDWIDTH

Select bandwidth of resolution bandwidth filter.

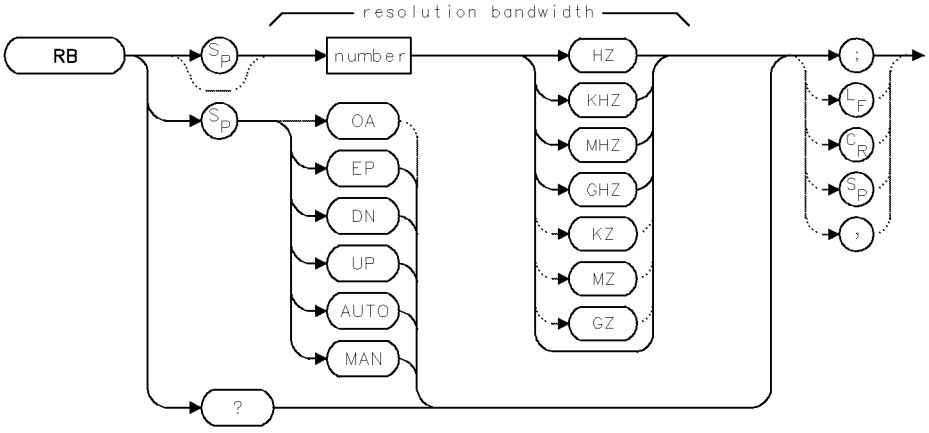


| Item | Description |
|---|---|
| Resolution-Bandwidth Range | Actual range is hardware limit. Firmware range is 1 Hz – 1000 GHz. |
| Step Increment | 1, 3, 10 sequence |
| Coupling | Sweep time (ST) and video bandwidth (VB) are coupled to RB, which is coupled to span (SP). |
| Interdependent Commands | VB, ST, RBR, SP and frequency functions when they change span significantly, such as CF, FA, FB, LOSTART, LOSTOP, HNLOCK, FS, SP |
| Preset State | `RB AUTO` |

## Example

Set the resolution bandwidth.

```
30 OUTPUT 718;"RB 100KHZ;"
40 OUTPUT 718;"RB EP;"
```

*Set resolution bandwidth filter to 100 kHz.*

*Suspend program operation to set the resolution bandwidth using the front panel controls. Select a value, then press* `ACCEPT VALUE`.

The RB command sets the resolution bandwidth. During normal operation, the resolution bandwidth, video-bandwidth, sweep-time, and span settings are coupled to yield specified amplitude and frequency accuracy with maximum measurement speed. Whenever any of these settings are changed, this optimum coupling is overridden, but the spectrum analyzer continues to maintain specified accuracy whenever possible. The uncalibrated warning, “UNCAL” is displayed whenever the new selection affects amplitude or frequency accuracy.

Operation is as follows:

- The resolution bandwidth changes as the span changes according to the ratio set by RBR, if resolution bandwidth is set to automatic. If `RB MAN` is executed, or if the resolution bandwidth is selected with RB, the resolution bandwidth does not change with span.

- The video bandwidth changes as the resolution bandwidth changes, if the video bandwidth is set to automatic.
- The sweep time changes as the resolution bandwidth changes, if sweep time is set to automatic.

## Query Response

# RBR

RESOLUTION-BANDWIDTH/SPAN RATIO

Set ratio of resolution bandwidth to span.

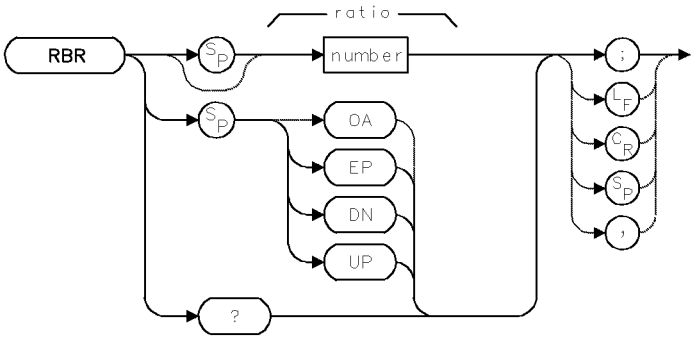


| Item | Description |
|---|---|
| Ratio Range | Actual range is hardware dependent. Firmware range is $10^{-100}$ – $10^{100}$ |
| Step Increment | 1, 3, 10 sequence |
| Interdependent Commands | RB, SP |
| Preset State | `RBR .01` |

## Example

Change the ratio between the bandwidth of the resolution bandwidth filter and the span.

```
160 OUTPUT 718;"RBR 0.03;"      Set resolution bandwidth/span ratio to 0.03.
```

The RBR command determines the ratio between the resolution bandwidth and span settings when they are set to automatic.

resolution bandwidth ÷ span = RBR

## Query Response

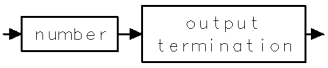

# RCLD

RECALL "DOWN-LOADABLE" PROGRAMS (DLP)

Recall stored limit lines and user-defined functions, variables, keys, and traces.

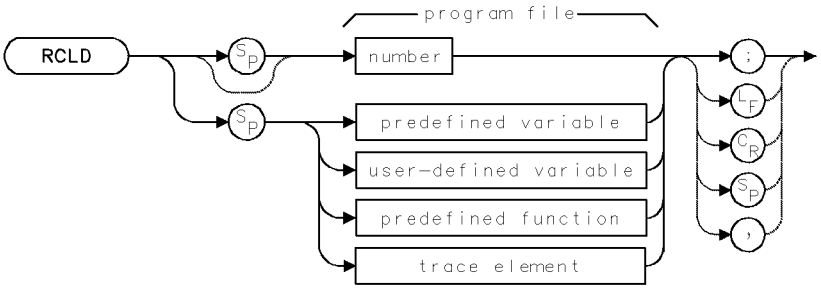


| Item | Description |
|---|---|
| Range | 0 – 9999, depending on memory |
| Requirements | Requires internal memory. See Appendix D for commands that consume memory. To select storage location (HP-IB device, HP-MSIB device, or internal memory), execute MSI before executing RCLD. Internal memory is the storage device when power is applied to the spectrum analyzer. |

The RCLD command recalls the contents of a program file from the currently selected mass storage device. Unless specified otherwise by the MSI command, internal memory is the storage device. Since program files cannot reside in internal memory, use MSI to select external memory.

RCLD specifies the number of the file for recall. In the catalog of user memory, the number is shown after the underscore. See SAVED command for more information. Also see the LOAD command.

The contents of the recalled file consist of spectrum analyzer programming commands. When the file is recalled, the contents are executed, storing articles in spectrum analyzer memory. The operation of the RCLD command varies with the contents of the file recalled.

- Files containing trace data are loaded into the specified trace, or trace A if the destination is not specified. All instrument settings are changed to reproduce the state the spectrum analyzer was in when the trace was stored. In addition, the trace is placed in view mode.
- Files containing user-defined variables, functions, traces, or keys are loaded into internal memory. Any duplicate user-defined articles over-write the existing versions.
- Files containing an on-end-of-sweep algorithm are loaded into internal memory. The existing on-end-of-sweep algorithm, if present, is erased and replaced with the loaded algorithm.
- Files containing a limit line are loaded into the limit-line table.
- Loading state-register files reactivates the stored instrument state.
- Loading user-key files reactivates the stored (USER)-key menu.

# RCLS

RECALL STATE

Recall instrument settings and title line from a state-register file.

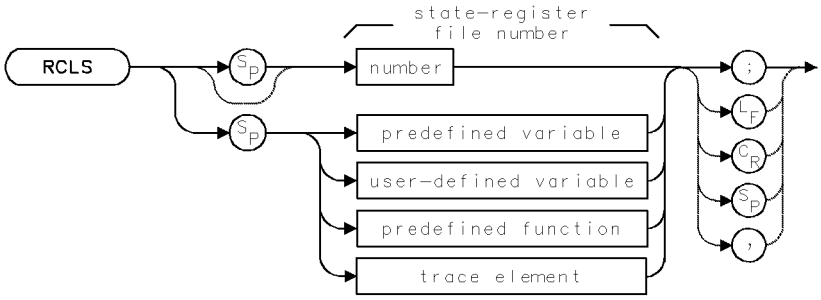


| Item | Description |
|---|---|
| Range | 0 – 9999, depending on memory |
| Requirements | To select storage location (HP-IB device, HP-MSIB device, or internal memory), execute MSI before executing RCLS. Internal memory is the storage device when power is applied to the spectrum analyzer. |

The RCLS command recalls the contents of a state-register file from the currently selected mass storage device. Unless specified otherwise by the MSI command, internal memory is the storage device.

RCLS specifies the number of the file for recall. In the catalog of user memory, the number is shown after the underscore. See SAVES command for more information. Also see the LOAD command.

The contents of the file are loaded into reserved memory, changing the instrument settings to those of the recalled state.

# RCLT

RECALL TRACE

Recall contents of a trace file.

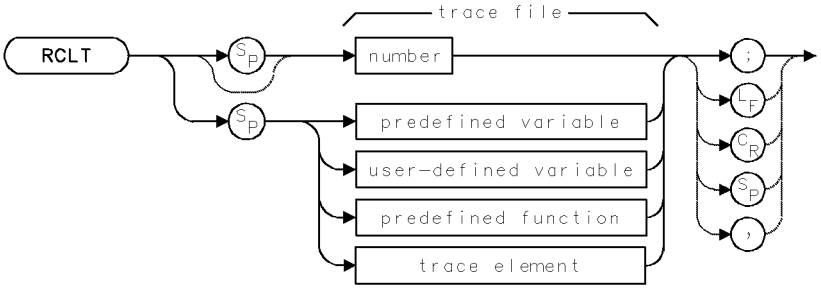


| Item | Description |
|---|---|
| Range | 0 – 9999, depending on memory |
| Requirements | To select storage location (HP-IB device, HP-MSIB device, or internal memory), execute MSI before executing RCLT. Internal memory is the storage device when power is applied to the spectrum analyzer. |

The RCLT command replaces trace A with the contents of a trace file from the currently selected mass storage device. Unless specified otherwise by the MSI command, internal memory is the storage device.

All instrument settings are changed to reproduce the state the spectrum analyzer was in when the trace was stored. View mode is activated.

RCLT specifies the number of the file for recall. In the catalog of user memory, the number is shown after the underscore. See SAVET command for more information. Also see the LOAD command.

# RCLU

RECALL USER KEYS

Recall stored menu of (USER) keys.

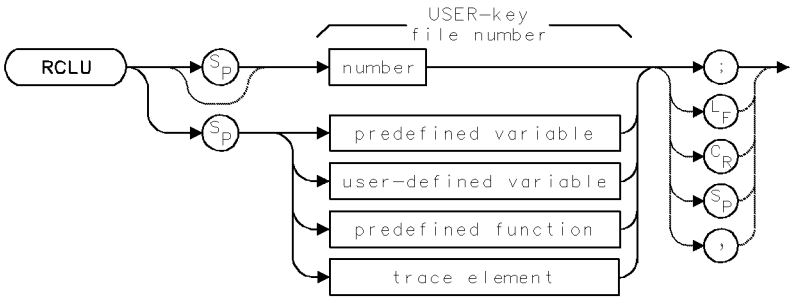


| Item | Description |
|---|---|
| Range | 0 – 9999, depending on memory |
| Requirements | To select storage location (HP-IB device, HP-MSIB device, or internal memory), execute MSI before executing RCLU. Internal memory is the storage device when power is applied to the spectrum analyzer. |

The RCLU command recalls the contents of a (USER) key file from the currently selected mass storage device. Unless specified otherwise by the MSI command, internal memory is the storage device. RCLU specifies the number of the file for recall. In the catalog of user memory, the number is shown after the underscore.

The contents of the file are loaded into the menu for the (USER) key, erasing the previous menu. Any user-defined custom keypad keys are also loaded. Refer to the KEYDEF command for information on defining custom keypad keys.

# RCVRMODE

RECEIVER MODE

Control the value of the receiver mode flag. This command controls whether the instrument behaves more like a receiver or a spectrum analyzer. This affects video bandwidth coupling, the ratio between the video bandwidth and the resolution bandwidth, and the ability to control the IF step gain.

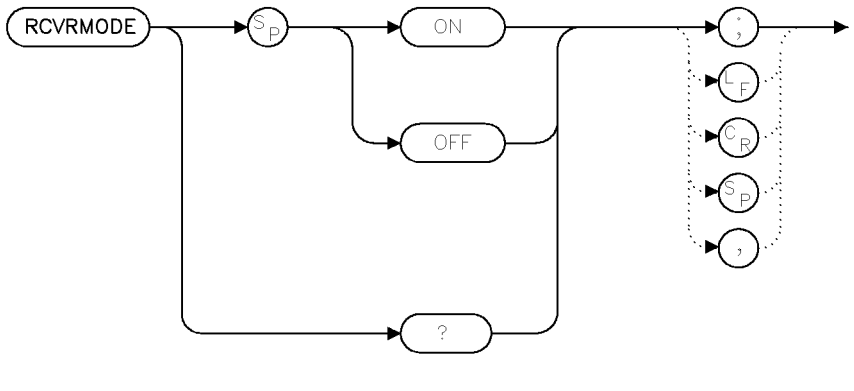


rcvrmode

| Item | Description |
|---|---|
| Restrictions | The SG (step gain) command appears in a menu only if RCVRMODE is true. |
| Inter-Dependent Commands | SG |
| Preset State | Is the value that would be selected by RCVRMODE AUTO. |

## Example

```
RCVRMODE ON;      Turn on receiver mode.
RCVRMODE OFF;     Turn off receiver mode.
RCVRMODE AUTO;    Same as RCVRMODE ON if any IF module in the system has
                  an RB of ≥10 MHz. Otherwise, same as RCVRMODE OFF.
RCVRMODE?         Report the current receiver mode value (ON of OFF).
```

RCVRMODE is a toggle to change the operation of the instrument to be more in line with the operation of a receiver (as opposed to a spectrum analyzer). Currently, the set of differences is small. This is expected to change.

The first difference is in VB coupling. The normal VBR is 1.0. In receiver mode, the ratio is 0.5. Note that, due to the VB and RB ranges and the ceiling rounding used for VB coupling, the VBR difference is not often noticeable.

The second difference is in zero span operation. Normally the VB coupling will limit according to the bandwidth of the selected ADC. In receiver mode, this limiting does not occur.

## Query Response

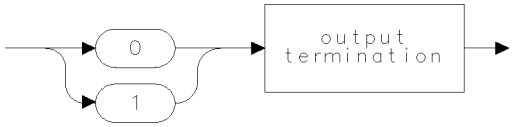


qgen0

# READMENU

READMENU

Build an interactive set of key functions.

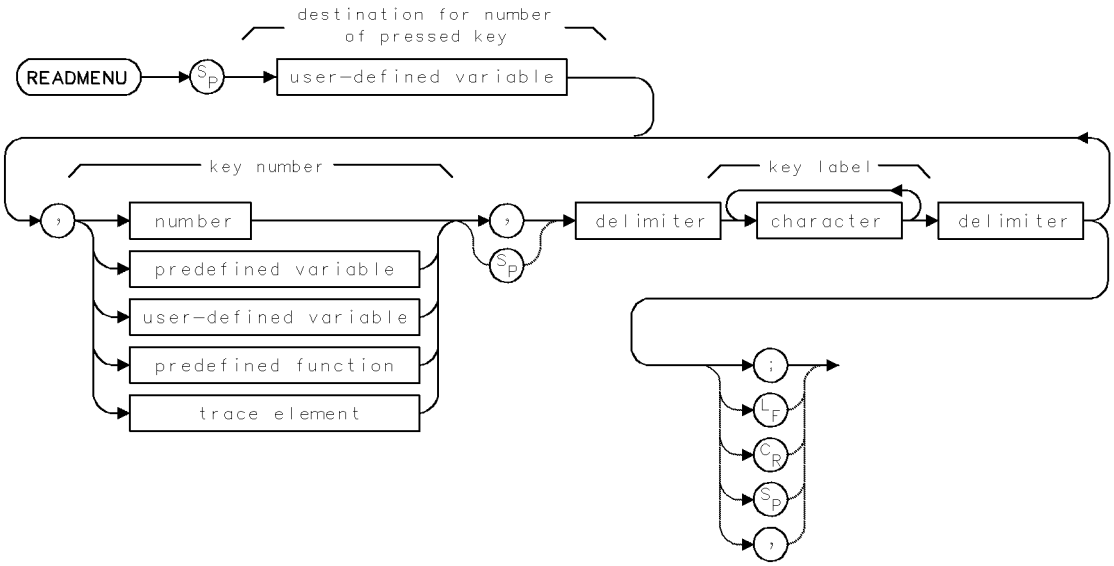


| Item | Description |
|---|---|
| Key-Number Range | Integers, 1 – 14 |
| Requirements | Execute in conjunction with IF/THEN, MOV, and VARDEF. Requires internal memory. See Appendix D for commands that consume memory. |

## Example

Use the READMENU command to form a menu of user-defined keys.

```
120 CLEAR 718                                          Initialize analyzer.
130 OUTPUT 718;"IP;"
140 OUTPUT 718;"VARDEF KEY,0;"                         Define a variable for storing the number of the key that was last pressed.
150 OUTPUT 718;"REPEAT;";                              Begin repeat loop.
155 OUTPUT 718;"PA 400,700;";                          position pen.
156 OUTPUT 718;"TEXT @EXIT KEY ENDS REPEAT LOOP.@;";
160 OUTPUT 718;"READMENU KEY,";                        Select a user-defined variable, KEY, where the number of the key can be stored when it is pressed. The keys are defined in the next program lines.
170 OUTPUT 718;"1,%VIEW CAL %,";                       VIEW CAL is key number 1.
```

```
180 OUTPUT 718;"2,%EXPAND RANGE%,";
190 OUTPUT 718;"14,%EXIT %;";
200 OUTPUT 718;"IF KEY,EQ,1;";
210 OUTPUT 718;"THEN;CF 300MHZ;SP 1MHZ;";
220 OUTPUT 718;"ELSIF KEY,EQ,2;";
230 OUTPUT 718;"THEN;CF 550MHZ;SP 900MHZ;";
240 OUTPUT 718;"ELSIF KEY,EQ,14;";
250 OUTPUT 718;"THEN;ABORT;";
260 OUTPUT 718;"ENDIF;";
270 OUTPUT 718;"UNTIL KEY,EQ,14;"
```

EXPAND RANGE *is key number 2.*

EXIT *is key number 14.*

*If KEY equals 1, set measurement range to measure the calibrator signal.*

*If KEY equals 2, increase the measurement range.*

*If KEY equals 14, then stop repeating lines 150 – 270.*

*End repeat-loop definition.*

The READMENU command assigns a series of key labels to form a menu of keys that can be accessed with the (USER) key. READMENU can be used in conjunction with the IF/THEN/ELSE commands. No further commands are processed until the user presses one of the menu keys given by the READMENU command. After the execution is completed, the menus return to their previous state, and the *destination* (see syntax diagram) contains the number of the key that was pressed. Keys are numbered 1 through 14. Keys 1 through 7 and 8 through 14 line the right and left sides of the display, respectively.

See "Storing New Functions in the Spectrum Analyzer" in the Programming Fundamentals chapter.

# RELADC

RELEASE ADC

Release an ADC from the slave space of the HP 70900A/B local oscillator source.

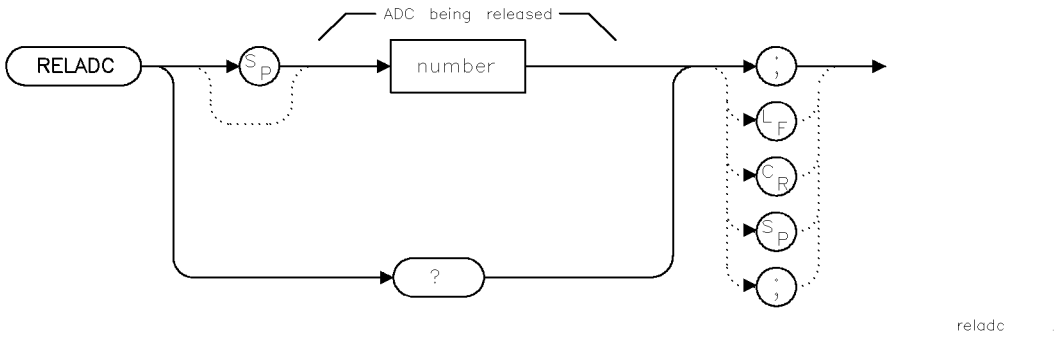


| Item | Description |
|---|---|
| Restrictions | The “release adc” menu will be seen only if there is an ADC besides the internal ADC. |

## Example

```
RELADC 2;  Free ADC #2 (typically the HP 70700A digitizer, if present).
RELADC 0;  Reacquire any previously released ADC.
RELADC?    Indicate whether there is a currently released ADC.
           Responses: 0 or 1.
```

If an ADC is released, the HP 70900B local oscillator source will release its links to all of its slaves and break its links (if any) to a display. If the released ADC is a HP 70700A digitizer, it will be switched into master mode and configured to properly monitor the HP 70900B local oscillator source based system’s video signal.

If the HP 70900B local oscillator source had a graphics link to a display, the HP 70900B local oscillator source will establish a control link with this display and build a window (#1) for the HP 70700A digitizer. This window will be of the same size as the HP 70900B local oscillator source’s window was. Graphics and keyboard links will subsequently be offered to the HP 70700A digitizer from the display.

After the release or reacquire operation is selected and all link manipulations and communications are complete, the HP 70900B local oscillator source will do a warm start reconfiguration. In the case of a newly released ADC, the selected ADC will be ignored by the configuration process. The first reconfiguration that immediately follows the release of an ADC will do an effective power-up last state even if this option is not currently selected. This is done to provide the released ADC with the same measurement set up as was available just prior to the ADC release.

The user is responsible for insuring that the system configuration (both logical and physical connections) still makes sense after a module is released. This should be automatic for the standard slaved HP 70700A digitizer configuration.

**Errors:**

| Item | Description |
|---|---|
| Parm out of range | A non-existent ADC number was entered. |
| Illegal operation | The internal (HP 70900B local oscillator source) ADC cannot be released. |
| Test Switch On: | One can't release an ADC if the test switch is on since the last state power on would fail. |
| NMAA | The specified ADC could not be contacted. |

This command is currently supported only for the HP 70700A digitizer ADC.

## Query Response

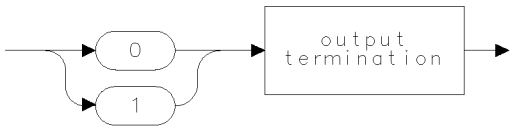


qgen0

# RELHPIB

RELEASE HP-IB.

Release control of HP-IB.

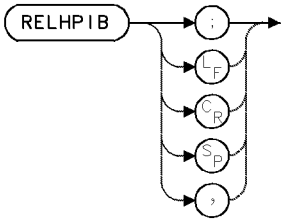


## Example

Discontinue spectrum analyzer control of HP-IB.

```
  140 OUTPUT 718;"OUTPUT 19,K,'FA';OUTPUT 19,K,'F_A';OUTPUT 19,K,'HZ';"
```

*The analyzer controls a device on HP-IB. The analyzer sends and receives data via HP-IB.*

```
  150 OUTPUT 718;"RELHPIB;"
```

*The analyzer releases control of HP-IB so that another device can control the bus.*

The RELHPIB command discontinues analyzer control of HP-IB. See ENTER and OUTPUT. See also “Spectrum Analyzer Control of HP-IB” in the Programming Fundamentals chapter.

# RELMOD

RELEASE MODULES

Release modules from the slave space of the instrument.

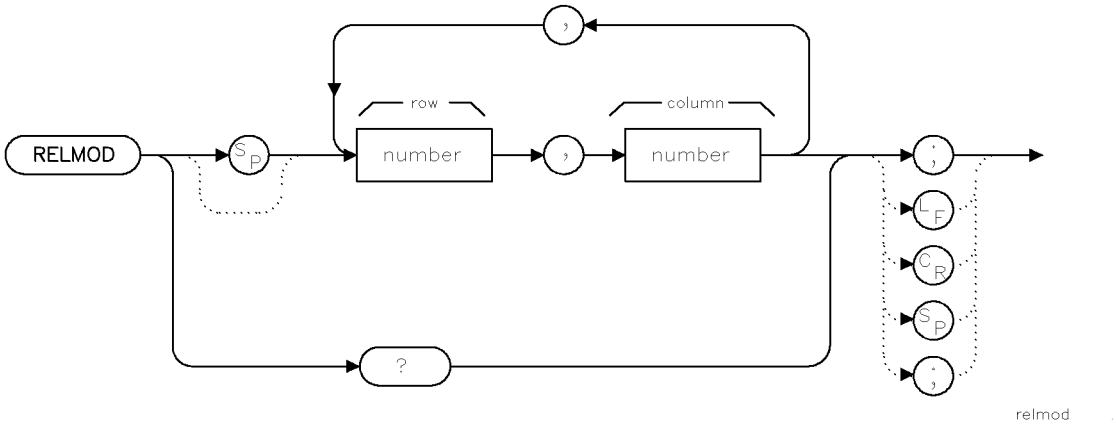


| Item | Description |
|---|---|
| Restrictions | Currently supported only for an HP 70900B local oscillator source master<br>for the HP 70911A WB IF section and HP 70700A digitizer slave modules. |

## Example

| | |
|---|---|
| RELMOD 3,18; | Release the module at HP-MSIB 3,18 (row 3, column 18). |
| RELMOD 3,18,5,18; | Release the modules at HP-MSIB 3,18 and 5,18. |
| RELMOD 0,0,5,18; | Release the module at HP-MSIB 5,18 and reacquire any previously released modules, but do NOT pass the display to 5,18. |
| RELMOD 0,0; | Reacquire any previously released modules. |
| RELMOD? | Return the HP-MSIB addresses of all currently released modules. Each address is returned as row,column.<br>Each pair of addresses is separated by ",<LF>". |

If modules are released, the instrument will release its links to all of its slaves and break its links (if any) to a display. If the instrument had a graphics link to a display and no released address is "0,0", the instrument will establish a control link with this display and build a window (#1) for the first released module. This window will be of the same size as the instrument's window was. Graphics and keyboard links will subsequently be offered to the released module from the display.

After the release or reacquire operation is selected and all link manipulations and communications are complete, the instrument will do a warm start reconfiguration with a power-up last state.

The release is valid only until a power cycle or reboot.

**RELMOD**

An HP 70700A digitizer would not appear in the “release module” submenu. Use RELADC instead.

The user is responsible for insuring that the system configuration (both logical and physical connections) still makes sense after modules are released.

The operation of RELMOD differs slightly if the released module is an HP 70700A digitizer. Refer to “RELADC” for the details.

| Item | Description |
|---|---|
| Parameter Out of Range | Illegal HP-MSIB address specified. |
| Illegal operation | The master module cannot be released. |
| Test switch on | One can’t release a module if the test switch is on. |
| NMAA | The specified module could not be contacted. |
| Memory overflow | Too many HP-MSIB addresses were specified (the limit is 32 pairs). |

## Query Response

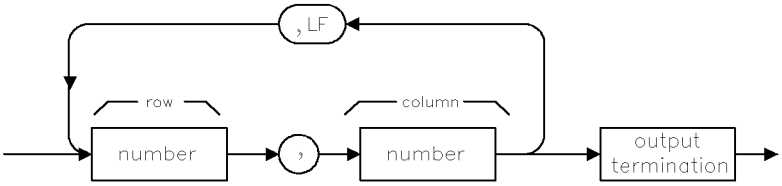


qures3

# REPEAT/UNTIL

REPEAT/UNTIL

Repeat a list of spectrum analyzer commands until a condition is met.

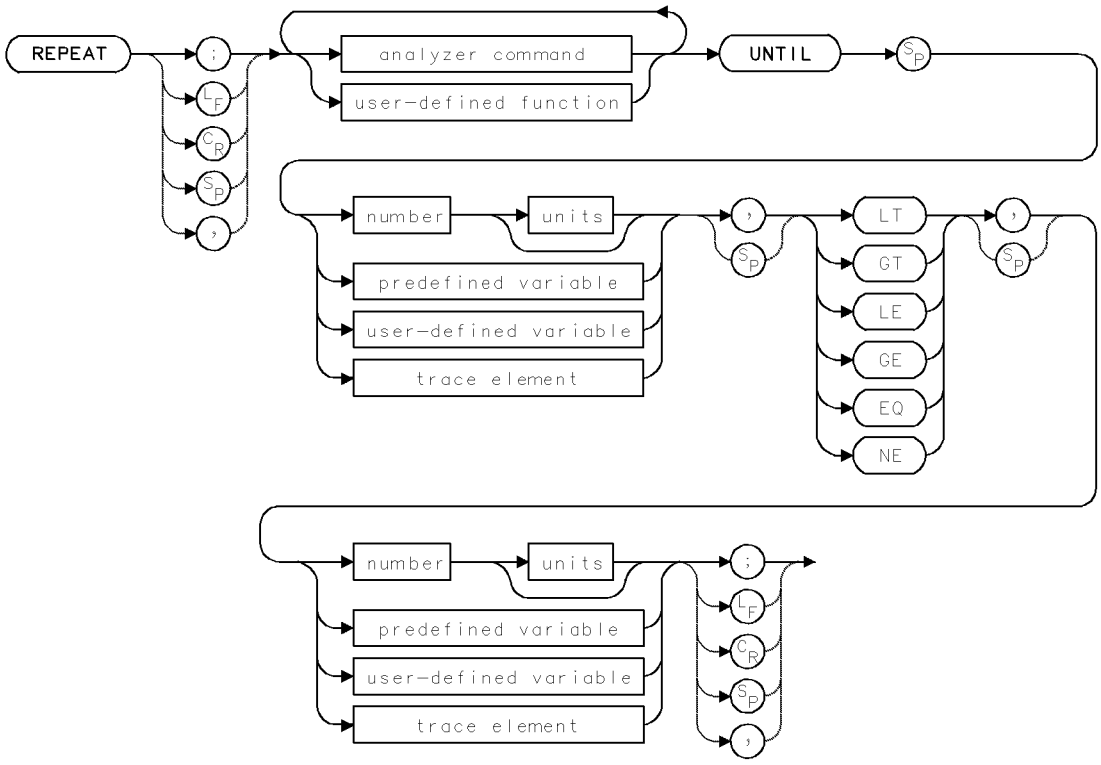


| Item | Description |
|---|---|
| Requirements | Requires internal memory. See Appendix D for commands that consume memory. VARDEF required when using *user-defined variable*. FUNCDEF required when using *user-defined function* |
| Interdependent Commands | ABORT, RETURN |

## Example

Use the REPEAT and UNTIL commands to measure different frequency ranges.

```
250 OUTPUT 718;"FA 100MHZ;FB 1 GHZ;"          Set measurement range.
260 OUTPUT 718;"REPEAT;";                     Begin repeat loop.
270 OUTPUT 718;"SP 10MHZ;";                   Change span to 10 MHz.
280 OUTPUT 718;"MOV CF,FB;TS;";               Set the center frequency equal to the
                                              stop frequency and take a sweep until
                                              the span equals 0.
290 OUTPUT 718;"UNTIL CF,EQ,1000000000;"      End loop when the center frequency
                                              equals 1 GHz.
```

**REPEAT/UNTIL**

The REPEAT and UNTIL commands work together to form a looping construct. All commands following the REPEAT command are executed repeatedly until the condition specified after the UNTIL command is satisfied. The conditions are:

- Greater than (GT)
- Less than (LT)
- Less than or equal to (LE)
- Greater than or equal to (GE)
- Equal to (EQ)
- Not equal to (NE)

If the condition is already satisfied at the time REPEAT/UNTIL is executed the first time, the commands following REPEAT are executed once.

The function of REPEAT/UNTIL is limited to the amount of internal memory available at the time they are executed. An error results if there is not enough memory.

Executing HP-IB device clear (CLEAR 718) stops the repeating process.

See IF/THEN, ABORT, and RETURN.

# RETURN

RETURN

Interrupt operation of current user-defined function, then return to the point where the function was originally encountered.

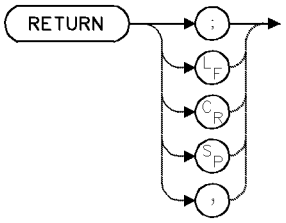


| Item | Description |
|---|---|
| Interdependent Commands | IF/THEN, ACTDEF, FUNCDEF |

## Example

Use RETURN to interrupt operation of the currently executing user-defined function and pass to the next level of commands.

The following example contains a user-defined function, called PROGRAM_1, nested inside another function, called PROGRAM_2, which itself is nested inside another function called PROGRAM_3. Thus, PROGRAM_3 executes PROGRAM_2, and PROGRAM_2 executes PROGRAM_1. PROGRAM_1 displays numbers (100, 200, 300, and 400), and also contains the RETURN command. When RETURN is encountered, operation is interrupted as illustrated in Figure 2-7.

```
5 OUTPUT 718;"IP;"                                  ! Instrument preset.
10 OUTPUT 718;"CLRDSP;"                             ! Clear graphics from memory.
20 OUTPUT 718;"TRDSP TRA,OFF;"                      ! Turn off trace A.
30 OUTPUT 718;"ANNOT OFF;GRAT OFF;"                 ! Blank annotation and graticule.
40 OUTPUT 718;"VARDEF YY,0;"                        ! Define user-defined variable
                                                    ! equal to 0.
50 !
60 OUTPUT 718;"FUNCDEF PROGRAM_1,^";                ! Define first user-defined func-
                                                    ! tion, PROGRAM_1, that prints
                                                    ! YY + 100 until YY equals
                                                    ! 300.
70 OUTPUT 718;"REPEAT;";                            ! Begin repeat loop.
80 OUTPUT 718;"ADD YY,YY,100;";                     ! Add 100 to YY.
90 OUTPUT 718;"PU;PA 100,YY;PD;";                   ! Position pen at (100,YY).
100 OUTPUT 718;"DSPLY YY,4,0;";                     ! Write value for YY.
110 OUTPUT 718;"IF YY,EQ,300;THEN;RETURN;ENDIF;";   ! If YY equals 300, execute RE-
                                                    ! TURN, then skip to line 170
                                                    ! and execute the next ana-
                                                    ! lyzer command following PRO-
                                                    ! GRAM_1.
120 OUTPUT 718;"UNTIL YY,EQ,400;";                  ! End loop when YY equals 400.
```

```
130 OUTPUT 718;"^;"
140 !
150 !
160 OUTPUT 718;"FUNCDEF PROGRAM_2,";
```

*Define second user-defined function, PROGRAM_2.*

```
  170 OUTPUT 718;"^PROGRAM_1; TEXT@INSIDE PROGRAM_2..@;^ ;";
```

*execute PROGRAM_1 and write "INSIDE PROGRAM_2.."*

```
  180 !

  190 OUTPUT 718;"FUNCDEF PROGRAM_3,";
```

*Define third user-defined function, PROGRAM_3.*

```
  200 OUTPUT 718;"^PROGRAM_2;TEXT@INSIDE PROGRAM_3@;^;";
```

*Execute PROGRAM_2 and write "inside PROGRAM_3."*

```
  210 !

  220 OUTPUT 718;"PROGRAM_3;";
```

*Execute PROGRAM_3.*

```
  230 OUTPUT 718;"PU;PA 300,200;"
```

*Position pen.*

```
  240 OUTPUT 718;"TEXT@OUTSIDE USER-DEFINED FUNCTIONS@;"
```

*Write text.*

The RETURN command interrupts operation of the currently operating user-defined function, as illustrated.

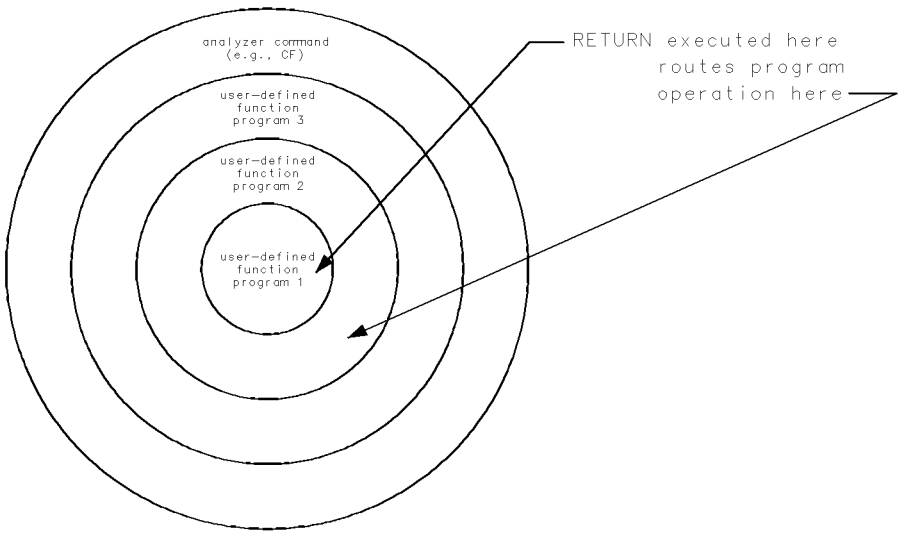


**Figure 2-7.**
**RETURN returns operation to first analyzer command or user-defined function that follows the user-defined function containing RETURN.**

The ABORT command also interrupts user-defined function operation, but interrupts operation of all user-defined functions instead. See "Branching and Looping" under "Storing New Functions in the Spectrum Analyzer" in the Programming Fundamentals chapter.

# REV

REVISION

Return firmware date code.

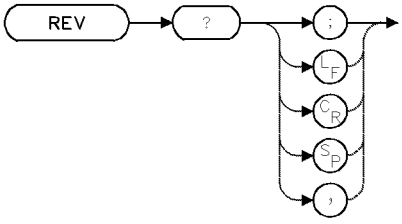


## Example

Use the REV command to find out the firmware version of the local oscillator module.

```
10 OUTPUT 718;"REV?;"      Return local oscillator firmware version to computer.
20 ENTER 718;N             Assign value to computer variable.
```

The REV command returns the revision number of the local oscillator firmware (ROM). The revision number is coded by date:

year – month – day

## Query Response

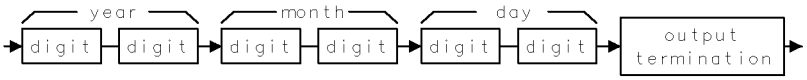

# RL

REFERENCE LEVEL

Set reference level.

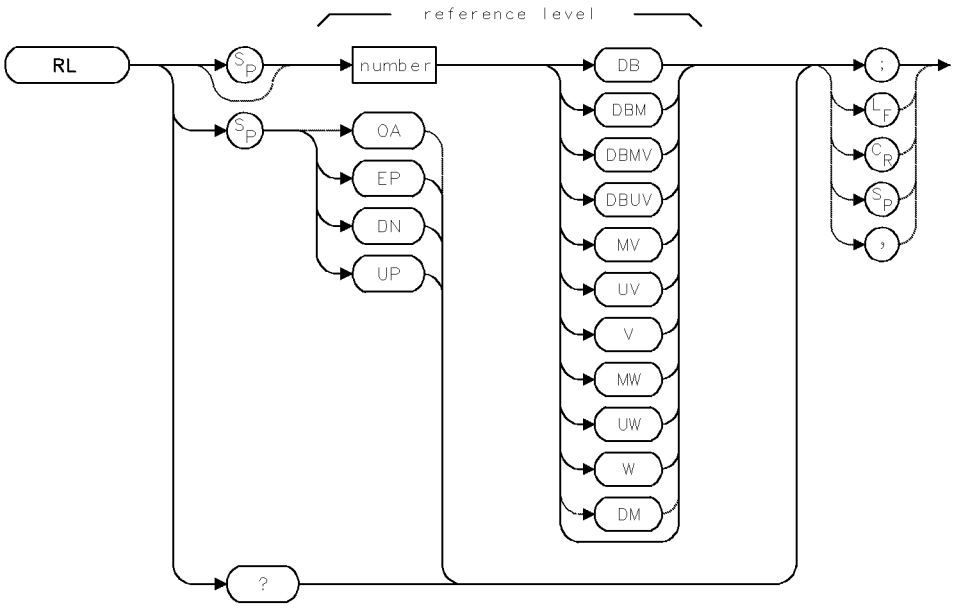


| Item | Description |
|---|---|
| Reference-Level Range | Actual range is hardware dependent. Firmware range is ± 300 dBm. |
| Step Increment | One vertical scale division. |
| Requirements | Update trace data after executing RL. |
| Coupling | Attenuation (AT) is coupled to reference level. Reference level is coupled to maximum input level (MIL) and mixer level (ML). |
| Interdependent Commands | Commands affecting amplitude, such as MIL, ML, AT, AUNITS, MEASURE, CNVLOSS, ROFFSET, RLPOS |
| Preset State | `RL 0 dBm` |

## Example

Change the reference level to −20 dBm.

```
10 OUTPUT 718;"IP;RL -20DBM;"
```

The RL command sets the absolute amplitude value of the **reference level**. The default units for the reference level are volts for linear mode and dBm for log mode. Use the AUNITS command to specify different reference level units. (The RLPOS command can be used to change the position of the reference level.)

During normal operation, the reference level and attenuator settings are coupled. The reference-level setting is coupled to the maximum-mixer-level setting (ML) and to the maximum-input-level setting (MIL) as well. This ensures that any displayed signals whose peaks are below the top graticule line, or below a dashed line if it is present, have levels that

do not exceed the selected maximum input level and are not affected significantly by gain compression.

When a tracking generator is installed in the analyzer and the stimulus-response mode (relative-amplitude mode) has been activated by `MEASURE SR`, the RL command sets the value of the reference level *relative* to trace A, if AMC, AMB or AMBPL is executed.

---

**Caution** The reference level can be set to signal levels that damage the analyzer. Be sure to observe the maximum input power limits.

---

See RLPOS, MIL, ML, AT, and MEASURE. Also see *HP 70000 Modular Spectrum Analyzer Operation Manual*, "Maximum Input Levels and Gain Compression" under "Amplitude Functions" in the Softkey Reference chapter.

## Query Response

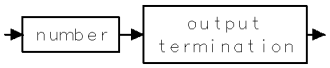

# RLPOS

REFERENCE LEVEL POSITION

Select position of reference level.

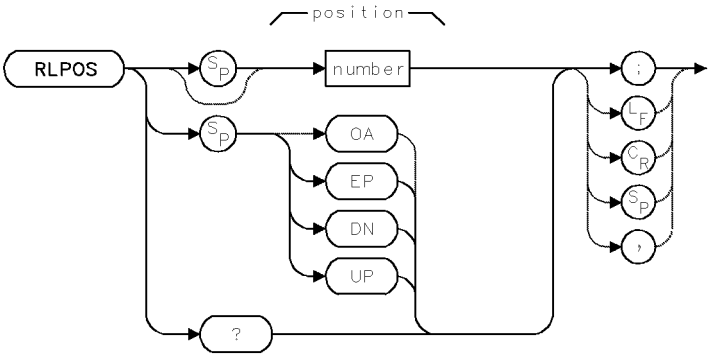


| Item | Description |
|---|---|
| Range | 0 – 10 |
| Step Increment | 1 |
| Interdependent Commands | RL, MIL, ML |
| Preset State | RLPOS 10 |

## Example

Change the position of the reference level.

```
130 OUTPUT 718;"IP;"          Initialize analyzer.
140 OUTPUT 718;"RLPOS 7;"     Position the reference level at the seventh major graticule
                              division.
```

The RLPOS command changes the position of the reference level during log display mode. The top and bottom graticule lines correspond to 10 and 0, respectively. Arrows indicate the reference level line when it is not at the top graticule line.

## Query Response

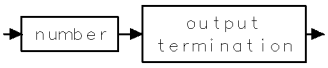

# RMS

ROOT MEAN SQUARE

Compute root mean square.

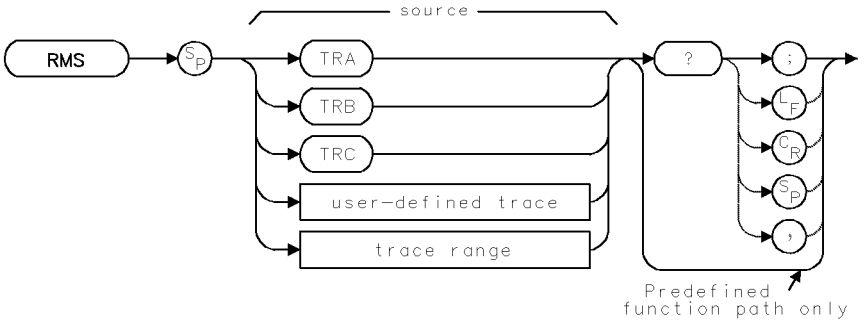


| Item | Description |
|---|---|
| Source-Amplitude Range | 0 – 10,000 measurement units for linear trace data in *TRA*, *TRB*, *TRC*, *trace range*, or *user-defined trace*. –32,768 – +32,767 measurement units for logarithmic trace data in *TRA*, *TRB*, *TRC*, *trace range*, or *user-defined trace*. |
| Source-Length Range | 3 – 1024 position units. Default is 800 position units when using *TRA*, *TRB*, *TRC*. |
| Requirements | Be sure data reflects one complete sweep when using *TRA*, *TRB*, *TRC*, or *trace range* for source. SNGLS and TS suggested. TRDEF required when using *user-defined trace*. |

## Example

Return the root mean square of all elements in trace A.

```
110 CLEAR 718                    Initialize analyzer.
120 OUTPUT 718;"IP;"
130 OUTPUT 718;"SNGLS;"          Activate single-sweep mode.
140 OUTPUT 718;"TS;RMS TRA?;"    Sweep. Return root-mean square.
150 ENTER 718;N                  Assign value to computer variable.
```

The RMS command computes the root-mean-square of the trace, in measurement units.

RMS must be used as either a query or as a source in another analyzer-command function. Form a query by ending the RMS statement with a question mark (?). When used as a query, RMS returns the root-mean-square of the trace, in measurement units.

Use RMS as a source by incorporating the RMS statement into the source of any spectrum analyzer command having *predefined function* in its syntax diagram. When RMS is used as a source, the root-mean-square value is used for operation by the command that contains RMS.

## Predefined-Function Syntax

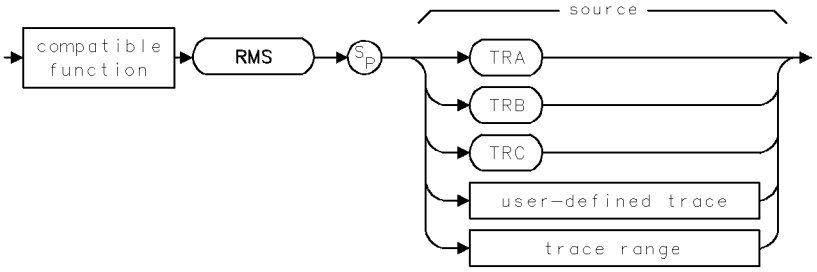


## Query Syntax

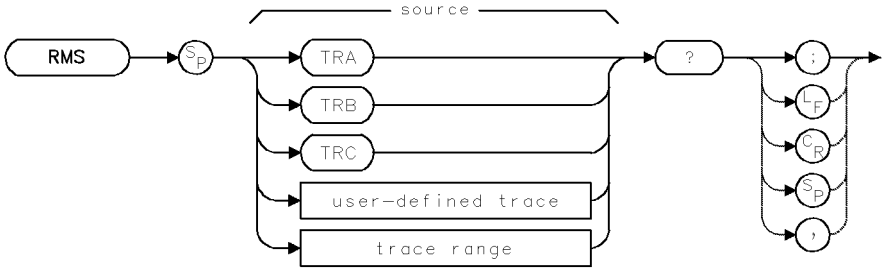


## Query Response

# ROFFSET

REFERENCE-LEVEL OFFSET

Offset absolute value of amplitude measurements.

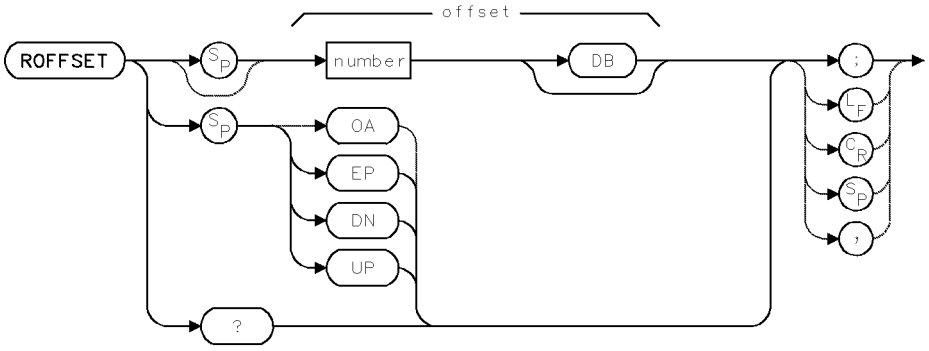


| Item | Description |
|---|---|
| Range | Actual range is hardware dependent. Firmware range is ±300 dB. |
| Step Increment | 1 major vertical scale division for log mode. 1 major vertical scale division at top of graticule (.915 dB) for linear mode. |
| Interdependent Commands | RL |
| Preset State | ROFFSET 0 dB |

## Example

Offset the reference level by 60 dB.

```
140 OUTPUT 718;"ROFFSET 60DB;"
```

The ROFFSET command offsets all amplitude readouts on the display without affecting the trace data. “ROFFSET” appears on the display when the offset is on. Values returned to the computer on HP-IB are also offset.

## Query Response

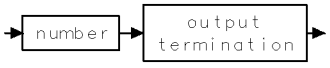

# RQS

REQUEST SERVICE CONDITIONS

Define conditions that interrupt computer operation.

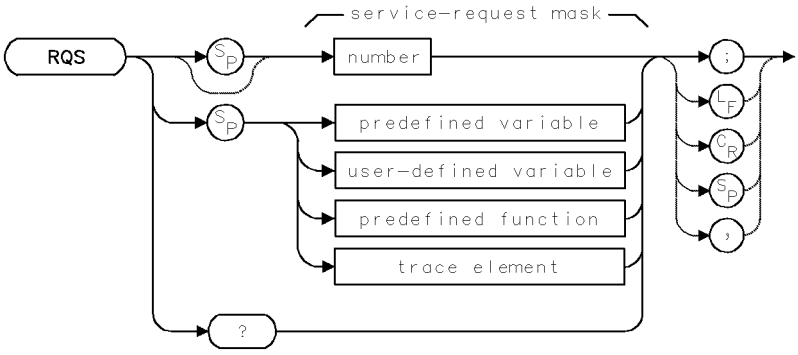


| Item | Description |
|---|---|
| Range | Integers from 0 – 255 |
| Requirements | VARDEF when using *user-defined variable*. |

## Example

Set the service-request mask so that service is requested when the sweep is completed.

```
100 ASSIGN @Sa TO 718
110 CLEAR @Sa                                  Initialize analyzer.
120 OUTPUT @Sa;"IP;"
130 OUTPUT @Sa;"RQS 4;"                        Specify bit 2, the END-OF-SWEEP
                                               bit.
140 OUTPUT @Sa;"CF 300MHZ;SP 1MHZ;SNGLS;TS;"  Set measurement range, then sweep
                                               it.
150 ON INTR 7 GOTO Srq                         Go to the subroutine Srq at the end
                                               of the sweep.
160 S=SPOLL(@Sa)                               Clear previous service requests.
170 ENABLE INTR 7;2                            prepare to receive interrupt.
180 OUTPUT @Sa;"VAVG 10;"                      Begin video averaging, which re-
                                               peatedly sweeps the analyzer.
190 Wait: GOTO Wait
200 Srq: Sbyte=SPOLL(@Sa)                      Store value of status-byte in Sbyte.
210 PRINT Sbyte                                print status-byte value.
220 OUTPUT @Sa;"RQS 0;"                        Clear service-request mask.
```

The RQS command enables the service-request mode. RQS defines the **service-request mask** that selects which bits of the **status-byte register** can generate a service request. Once RQS is executed, computer service is requested whenever any of the selected service conditions occur.

For example, executing RQS 2 means that service is requested whenever a message is present in the message area. The analyzer requests service by setting bit 2 in the status-byte register true.

Bit 6 of the status-byte register is set whenever the service-request condition is met. Bit 6 in the service-request mask does not need to be set in order for a service-request to occur.

The service-request mask is shown in the following table.

**Table 2-22. Spectrum-Analyzer Service-Request Mask**

| Bit Number | Decimal Equivalent | Spectrum-Analyzer State | Description |
|---|---|---|---|
| 7 | 128 | | Unused. |
| 6 | 64 | RQS | Does not need to be set in order for a service-request to occur. |
| 5 | 32 | ERROR PRESENT | Set to request service when error register contains an error. |
| 4 | 16 | COMMAND COMPLETE | Set to request service at completion of command execution. |
| 3 | 8 | | Unused |
| 2 | 4 | END OF SWEEP | Set to request service at completion of sweep. |
| 1 | 2 | MESSAGE | Set to request service when messages appear, such as UNCAL (uncalibrated), UNCOR (uncorrected), or power bar zeroing. |
| 0 | 1 | TRIGGER ARMED | Set to request service when analyzer is ready to receive a sweep trigger. |

RQS is set to zero when power is applied to the spectrum analyzer or when it is cleared via HP-IB. (For example, the HP BASIC command, CLEAR 718, clears the spectrum analyzer when it is at HP-IB address 18, interface 7.)

See SRQ, STB, and CLS. See also “Monitoring System Operation” in the Programming Fundamentals chapter.

## Query Response

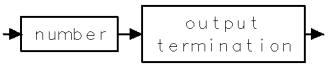

# RSPSVTY

RESPONSIVITY

Set or return responsivity of the lightwave system's PIN diode.

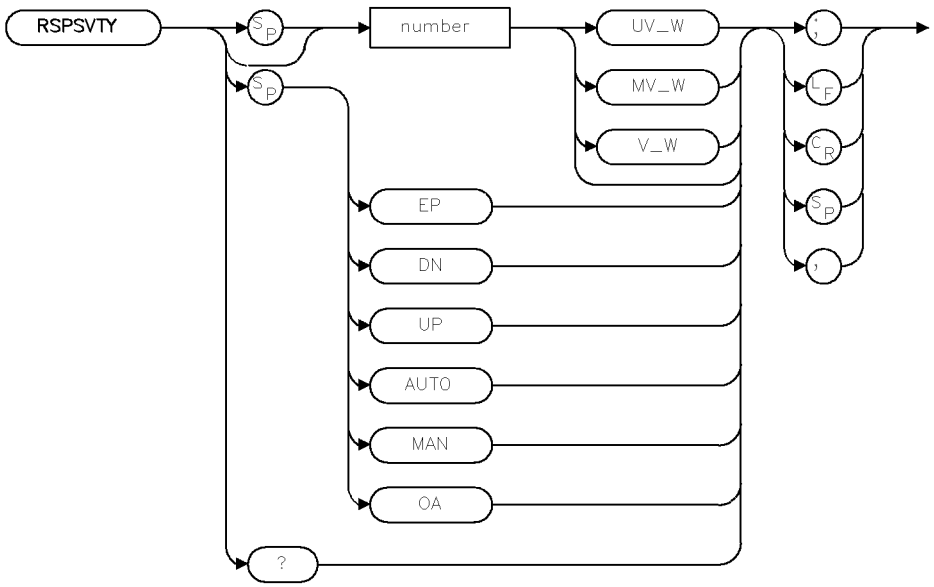


| Item | Description |
|---|---|
| Requirement | Requires lightwave module. |
| Preset State | AUTO |
| Restrictions | Available only in lightwave paths.<br>Can only be set in lightwave electrical mode (OPTMODE ELECT). |
| Interdependent Commands | OPTMODE, INPUT, LAMBDA |

## Example

```
10 OUTPUT 718;"RSPSVTY 35;"
20 OUTPUT 718;"RSPSVTY?;"
```

The RSPSVTY command is used with a lightwave signal path to query the lightwave system's PIN diode responsivity. In lightwave electrical mode, RSPSVTY can be used to simulate other responsivities.

While in AUTO mode, the RSPSVTY command will always return the factory-set value of responsivity for the current operating wavelength, in volts per watt.

When a numeric value of responsivity is entered with the OPTMODE ELECT command in effect, the display of signals on the analyzer display screen will be altered to show what signal amplitudes would be if the lightwave module's PIN diode had the given responsivity. Optical power measurements (given in electrical units) will also be adjusted accordingly.

Entering a numeric value of responsivity, or sending the RSPSVTY command, places RSPSVTY in manual mode. In this case, changes in responsivity (for example, due to changing LAMBDA) will not be automatically performed.

## Query Response

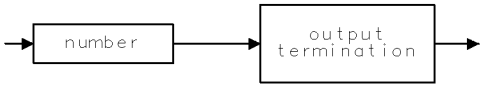


QNUM

# SAVED

SAVE “DOWN-LOADABLE” PROGRAMS (DLP)

Store limit lines and user-defined functions, variables, keys, and traces in a file.

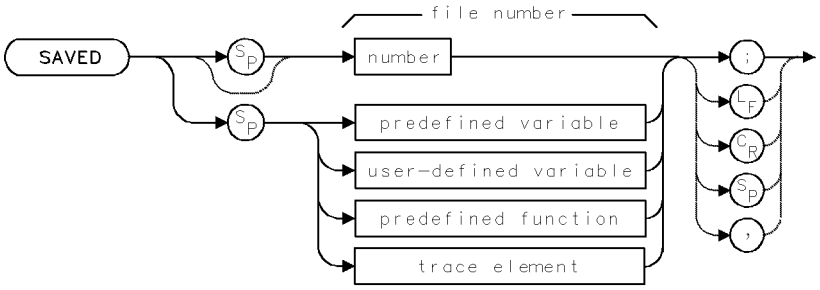


| Item | Description |
|---|---|
| Range | 0 – 9999, depending on memory |
| Restriction | Cannot store files in internal memory. |
| Requirements | To select storage location (HP-IB device or HP-MSIB device), execute MSI before executing SAVED. Requires external memory. See Appendix D for commands that consume memory. |

The SAVED command stores all of the following articles in a file if the articles are present in memory. The file type or identifier, as shown in the catalog of internal memory, is shown in parentheses.

- user-defined variables (VAR)
- user-defined functions (FUNC or AFUNC)
- on-end-of-sweep algorithms (ONEOS)
- user-defined traces (TRACE)
- currently active menu of (USER) keys (not listed in catalog)
- (USER) keys file
- limit lines

SAVED stores files in external memory only, which is specified by the MSI command. Since internal memory is the storage device when power is applied, the MSI command is needed to select the desired external memory.

SAVED specifies the number of the file where the article(s) will be stored. The file name is a combination of the file number and the file prefix. When SAVED stores files, entries appear in the catalog as “d_*N*”, where *N* is the number of the file, and “d_” indicates the file contains a user-defined article, such as a user-defined variable. For example, the entry for `SAVED 2` is listed in the catalog as “d_2”. Use the PREFX command to change the “d_” prefix from its default setting to another combination of letters.

Use SAVED to transfer user-defined articles to memory outside of the spectrum analyzer. Once transferred to an external device, erase the entries from internal memory with the DISPOSE, PURGE, or PERASE command if additional internal-memory space is desired. Recall stored files with the RCLD or LOAD command.

# SAVES

SAVE STATE

Save instrument settings and title line in a state-register file for future recall.

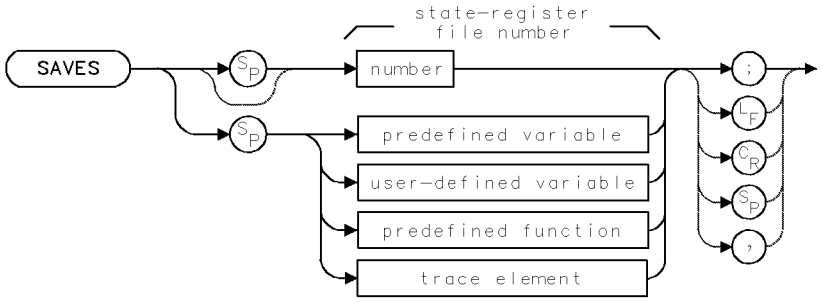


| Item | Description |
|---|---|
| Range | 1 – 9999 |
| Requirements | To select storage location (HP-IB device, HP-MSIB device, or internal memory), execute MSI before executing SAVES. Internal memory is the storage device when power is applied to the spectrum analyzer. Requires memory. See Appendix D for commands that consume memory. VARDEF required when using *user-defined variable*. |
| Interdependent Commands | PSTATE, DISPOSE |

## Example

Use the SAVE command to save analyzer settings for future recall.

```
10 CLEAR 718                          Initialize analyzer.
20 OUTPUT 718;"IP;"
30 OUTPUT 718;"PSTATE OFF;"           Turn off state-register file protection.
40 OUTPUT 718;"CF 303MHZ;SP 10MHZ;"   Set measurement range.
50 OUTPUT 718;"SAVES 3;"              Save instrument in file number 3.
60 OUTPUT 718;"IP;"                   Preset analyzer settings.
70 OUTPUT 718;"RCLS 3;"               Recall file.
```

The SAVES command saves the current spectrum analyzer state in a state-register file, specified by a number. Information saved includes all front panel settings and any text in the title line. (See TITLE command.)

SAVES stores files in user memory, which is the currently selected mass storage device. Unless specified otherwise by the MSI command, internal memory is the storage device.

Files are listed in the catalog by default as "s_*N*", where *N* is the number of the file and "s_" indicates the file contains an instrument state. For example, the entry for `SAVES 2` is listed in the catalog as "s_2". Use the PREFX command to change the "s_" prefix from its default setting to another combination of letters. (Press `State`, recall, `catalog & MSI` to view the catalog of user memory.)

**SAVES**

Use the RCLS or LOAD command to recall file contents. Use PURGE or DISPOSE to erase files. Use PROTECT or PSTATE to prevent inadvertent file erasure from internal memory only.

---

**Note** The PSTATE and PROTECT commands do not protect state-register files against erasure or overwriting with the PURGE, ERASE, or LOAD command.

---

See POWERON, PSTATE, NSTATE, and RCLS.

# SAVET

STORE TRACE

Store trace A in a file.

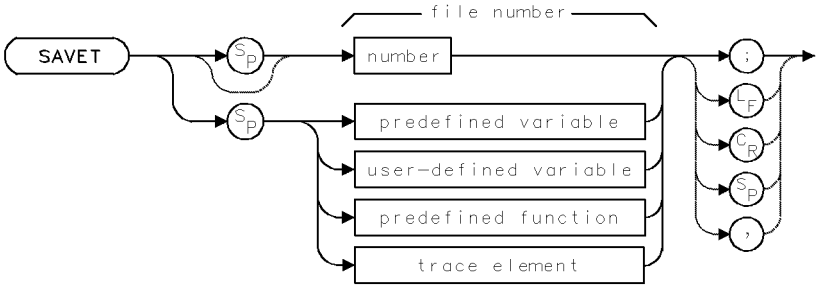


| Item | Description |
|---|---|
| Range | 0 – 9999, depending on memory |
| Requirements | To select storage location (HP-IB device, HP-MSIB device, or internal memory), execute MSI before executing SAVET. Internal memory is the storage device when power is applied to the spectrum analyzer.) Requires user memory. See Appendix D for commands that consume memory. Be sure trace data contains one complete sweep. SNGLS and TS suggested. VARDEF required when using *user-defined variable*. |
| Interdependent Commands | DISPOSE, PROTECT |

SAVET stores the contents of trace A in a file in user memory, which is the currently selected mass storage device. Unless specified otherwise by the MSI command, internal memory is the storage device. Files are listed in the catalog by default as "t_*N*", where *N* is the number of the file, and "t_" indicates the file contains a trace array. For example, the entry for `SAVET 2` is listed in the catalog as "t_2". Use the PREFX command to change the "t_" prefix from its default setting to another combination of letters. (Press `State`, `recall`, catalog to view the catalog of user memory.) Use the RCLT or LOAD command to recall file contents. Use PURGE or DISPOSE to erase files. Use PROTECT to prevent inadvertent file erasure from internal memory only.

**Note** The PROTECT command does not protect trace files against erasure or overwriting with the PURGE, ERASE, or LOAD command.

See TRA and FETCH.

# SAVEU

SAVE USER KEYS

Save (USER) keys in a file for future recall.

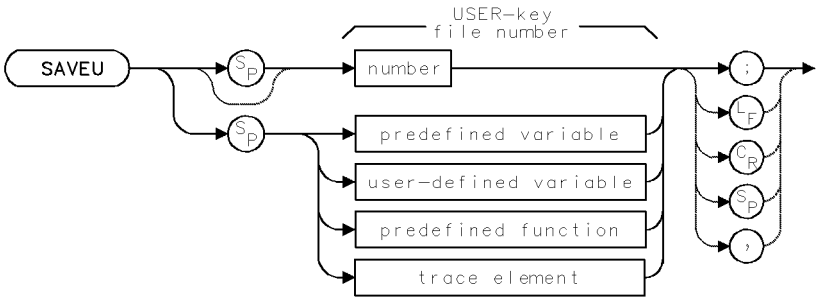


| Item | Description |
|---|---|
| Range | Integer, 0 – 9999, depending on memory. |
| Requirements | To select storage location (HP-IB device, HP-MSIB device, or internal memory), execute MSI before executing SAVEU. Internal memory is the storage device when power is applied to the spectrum analyzer.) Requires memory. See Appendix D for commands that consume memory. |
| Interdependent Commands | DISPOSE, PROTECT |

The SAVEU command stores the user-defined keys that are currently accessed with the (USER) key. It also saves any user-defined custom keypad keys. Refer to the KEYDEF command for information on defining custom keypad keys.

SAVEU stores files in user memory, which is the currently selected mass storage device. Unless specified otherwise by the MSI command, internal memory is the storage device. Files are listed in the user-memory catalog by default as "u_*N*", where *N* is the number of the file, and "u_" indicates the file contains (USER) keys. For example, the entry for `SAVEU 2` is listed in the catalog as "u_2". Use the PREFX command to change the "u_" prefix from its default setting to another combination of letters. (Press `State`, recall, `catalog & MSI` to view the catalog of user memory.) Use the RCLU or LOAD command to recall file contents. Use PURGE or DISPOSE to erase files. Use PROTECT to prevent inadvertent file erasure from internal memory only.

**Note** The PROTECT command does not protect trace files against erasure or overwriting with the PURGE, PERASE, ERASE or LOAD command.

# SCALE

SCALE GRAPHICS

Select X and Y scale for graphics.

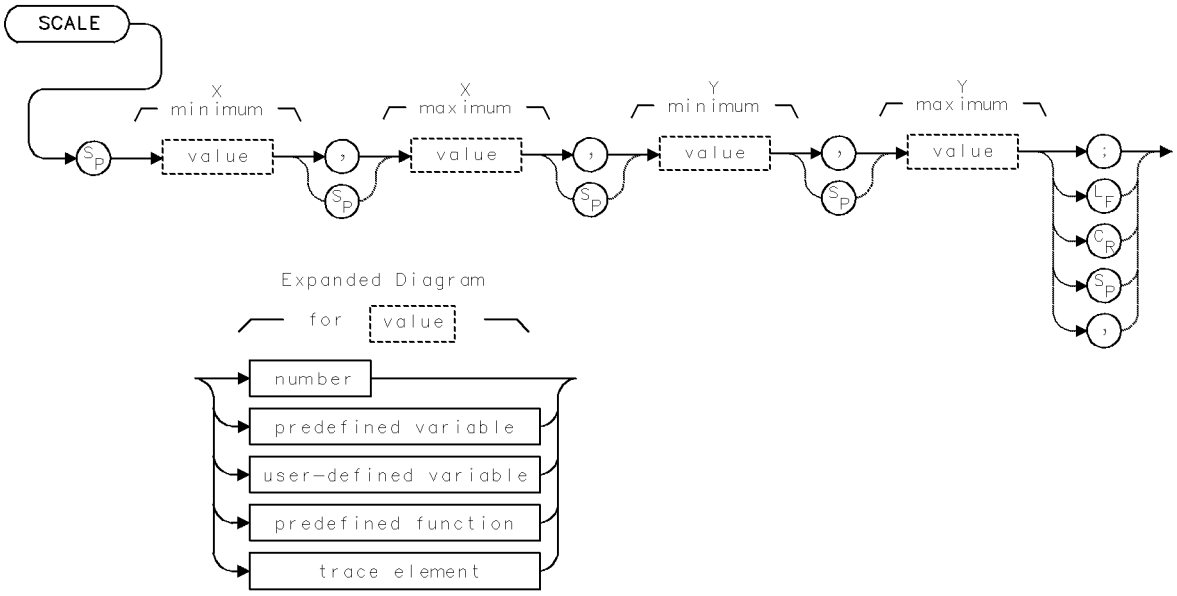


| Item | Description |
|---|---|
| Range for X-Minimum, Y-Minimum, X-Maximum, Y-Maximum | Integers, $\pm 1.8 \times 10^{308}$ |
| Requirements | VARDEF required when using *user-defined variable.* |
| Interdependent Commands | DWINDOW, OR, MK, IWINDOW, DSPLY, GRAPH, GRID, PA, PR, TEXT, CLRDSP |
| Preset State | `SCALE 0,1000,0,1000` |

## Example

Use the SCALE command to draw $Y = X_2$ on the spectrum analyzer display.

```
130 OUTPUT 718;"CLRDSP;"                  Clear graphics from memory.
140 OUTPUT 718;"TRDSP TRA,OFF;"           Turn off trace A.
150 OUTPUT 718;"ANNOT OFF;"               Turn off annotation.
160 OUTPUT 718;"GRAT OFF;"                Turn off graticule.
170 OUTPUT 718;"SCALE -10,10,0,100;"      Change minimum and maximum values for the X axis to –10 and 10 and the Y axis to 0 and 100.
180 OUTPUT 718;"PU;PA -10,0;"             Outline the perimeter of the coordinate system.
190 OUTPUT 718;"PD;PA -10,100,";          Semicolon suppresses carriage-return/line-feed.
200 OUTPUT 718;"10,100,10,0,-10,0;"
```

```
210 OUTPUT 718;"VARDEF XAXIS,-10;"          Define user-defined variable, XAXIS, equal
                                            to –10.
220 OUTPUT 718;"VARDEF YAXIS,0;"            Define user-defined variable, YAXIS, equal
                                            to 0.
230 OUTPUT 718;"PU;PA -10,100;PD;"          Move pen.
240 OUTPUT 718;"REPEAT;";                   Begin repeat loop.
250 OUTPUT 718;"ADD XAXIS,XAXIS,1;";        Increase XAXIS by 1.
260 OUTPUT 718;"MPY YAXIS,XAXIS,XAXIS;";    Square XAXIS.
270 OUTPUT 718;"PA XAXIS,YAXIS;";           Plot square function point by point un-
                                            til reaching the end of the X axis scale.
280 OUTPUT 718;"UNTIL XAXIS,EQ,10;"         End repeat loop when XAXIS=10.
290 OUTPUT 718;"PA PU -1,80;"               Write label.
300 OUTPUT 718;"TEXT$Y=X"
310 OUTPUT 718;CHR$(130);"$;"
```

The SCALE command scales the spectrum analyzer display for drawing graphics. The default scale is 0 to 1000 for both the X and Y axis, which extend across the width and height of the spectrum analyzer display.

The following commands draw on the spectrum analyzer display according to the units set by SCALE.

- Display variable (DSPLY)
- Graph trace (GRAPH)
- Display grid (GRID)
- Display marker (MK)
- Set origin (OR)
- Plot absolute value (PA)
- Plot relative value (PR)
- Display text (TEXT)

See DWINDOW. See also “Creating Graphics” in the Programming Fundamentals chapter.

# SER

SERIAL NUMBER

Return serial number of instrument.

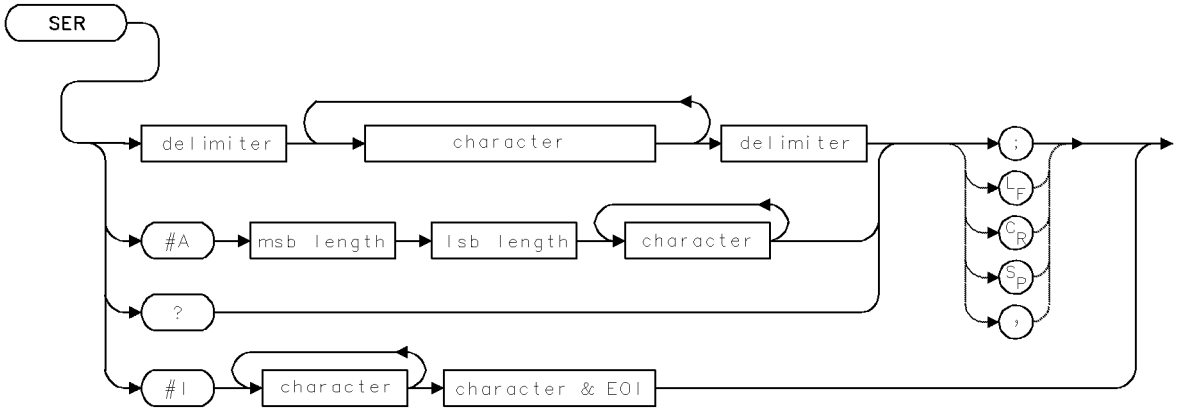


| Item | Description |
|---|---|
| Range | Maximum of 21 characters |

## Example

Return the serial number of the instrument to the computer.

```
140 ALLOCATE Serial$[24]                    Allocate computer character array for storing number.
150 OUTPUT 718;"SER?;"                      Return spectrum analyzer serial number to computer.
160 ENTER 718;Serial$                       Store number in character array.
170 OUTPUT 718;"WAIT 2S;"                   Analyzer pauses. Notice serial number appears on the spectrum analyzer display.
180 OUTPUT 718;"SER$Your #1 Analyzer$;"     Store a new serial number in memory.
190 OUTPUT 718;"WAIT 2S;"                   Analyzer pauses. Notice new number on spectrum analyzer display.
200 OUTPUT 718;"SER$"                       Replace original number.
210 OUTPUT 718;Serial$[5;LEN(Serial$)-4];"$;"
220 DEALLOCATE Serial$
```

The SER command stores the serial number of the spectrum analyzer in reserved memory. SER may be used to return the stored number to the computer.

## Query Response

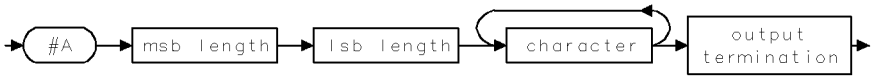

# SG

STEP GAIN

Control the first step gain in the signal path.

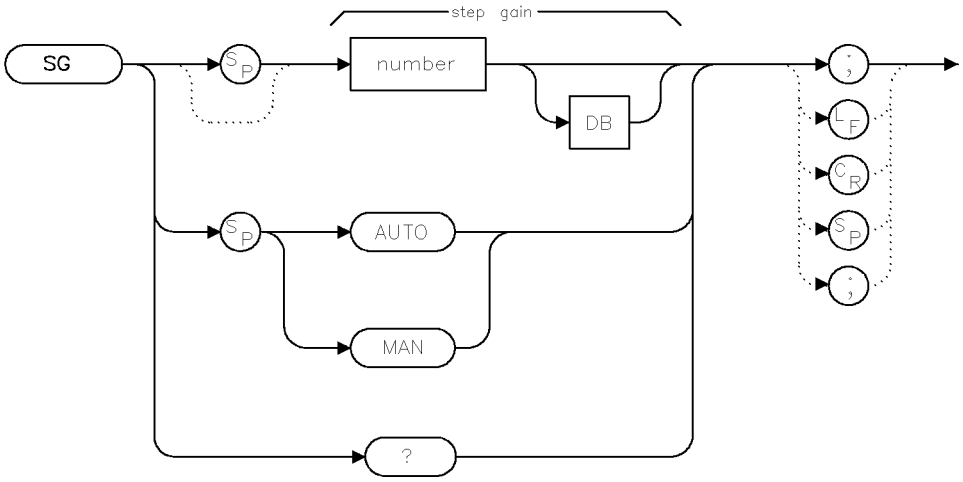


stepgain

| Item | Description |
|---|---|
| Requirements | |
| Restrictions | The range of values allowed for SG are signal path (and thus hardware) dependent. |
| Inter-Dependent Commands | |
| Preset State | AUTO |

## Example

```
SG AUTO;  Select automatic step gain control.
SG MAN;   Select manual step gain control.
SG 20;    Set the step gain total to 20 dB[1].
SG?       Return the current step gain total.
```

1 This command only works if there is hardware to support this capability.

For some applications, it is desirable to have a high degree of control over the gain through the signal path. The input attenuation is already controllable by use of the AT command. The step gains in the path typically are automatically controlled and are set as appropriate depending upon the appropriate current system parameters (such as the desired reference level). (A step gain is defined as a programmable gain functional block with a label of “SG” .)

The SG command allows direct control of the step gains in the signal path. If there is more than one step gain in the signal path, the gain will be applied as late as possible in the signal path (toward the detector in preference to toward the mixer). Multiple step gains may be used to achieve the requested total step gain.

The SG information is part of the instrument state, so SAVES/RCLS will interact properly with this command.

An '*' annunciator will appear to the right of the RL annotation if the SG is not in AUTO.

The SG command is fully supported by the Compiled Instrument-C environment.

If SG is set explicitly, a warning "Possible compression" (warning # 16007) will be issued if the step gain total is too high for the detector.

## Query Response

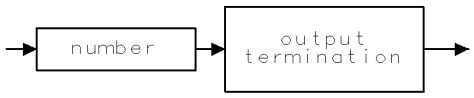


qgennum

# SIGDEL

SIGNAL AMPLITUDE DELTA

Specify maximum amplitude difference allowed between a signal and its image during signal-identification routines.

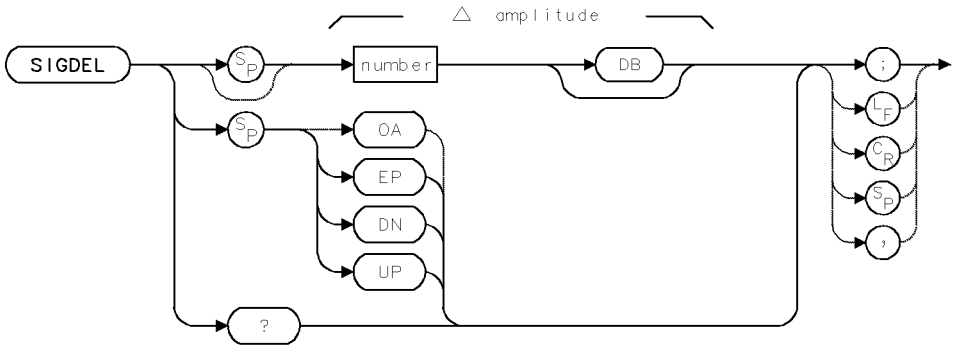


| Item | Description |
|---|---|
| Range | 0 – 300 dB |
| Step Increment | 1 major vertical division during log mode. 1 major vertical division at top graticule line (.915 dB) during linear mode. |
| Interdependent Commands | SIGID |
| Preset State | SIGDEL 10DB |

## Example

Specify the maximum amplitude difference between a response and images which are tested during the signal identification process.

```
140 OUTPUT 718;"SIGDEL 20DB;"     Set difference to 20 dB.
```

The SIGDEL command specifies the maximum amplitude difference allowed between a signal and its image during signal identification routines.

See SIGID and IDMODE. See also *HP 70000 Modular Spectrum Analyzer Operating Manual* "Signal-Identification" in the Softkey Reference chapter.

## Query Response

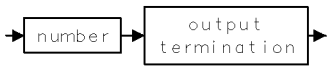

# SIGID

SIGNAL IDENTIFICATION

Determine if signal is present at the spectrum analyzer input.

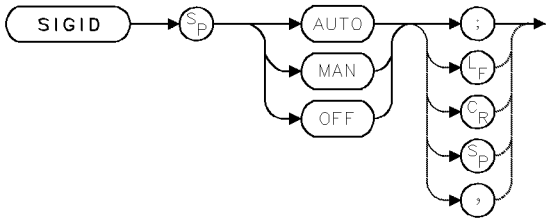


| Item | Description |
|---|---|
| Interdependent Commands | SIGDEL, NSTART, NSTOP, IDMODE, MKPX and any commands that affect the frequency of the measurement range, such as FA, FB, CF, SP, FS, LOSTART, LOSTOP, HNLOCK |

## Example

Initiate the signal-identification routine. (This example applies to the HP 71200C modular spectrum analyzer Microwave Spectrum Analyzer.)

Connect calibration signal to input.

```
10 CLEAR 718
20 OUTPUT 718;"IP;"
30 OUTPUT 718;"SP 1MHZ;CF 300MHZ;"          Set measurement range and sweep.
40 OUTPUT 718;"IDMODE SHIFT;SIGID AUTO;"    Identify signal with shift method.
```

The SIGID command initiates one of two signal identification routines that distinguish real signals from image responses. The IDMODE command determines which method is used, image or shift.

`SIGID AUTO` displays the frequency of the identified signal, if found, and returns the spectrum analyzer to the state it was in when the identification process was initiated. `SIGID AUTO` works best for stable signals that are easily marked with the marker.

`SIGID MAN` displays a signal for evaluation every other sweep. The position of the signal on alternate sweeps indicates whether the tested signal is a real or image response as follows:

- The shift method shifts the position of the tested signal by varying amounts, depending on whether the signal is real or false. If real, the signal position shifts less than 1/2 division every other sweep. If false, the signal position shifts more than 1 division every other sweep.
- The image method displays on alternate sweeps a signal that satisfies N × LO − IF and N × LO + IF. If the tested signal is real, its position remains unchanged. If the tested signal is false, its position is offset more than 1 division every other sweep.

See IDMODE for more information about the shift and image methods.

# SMOOTH

SMOOTH TRACE

Reduce amplitude variations on a trace.

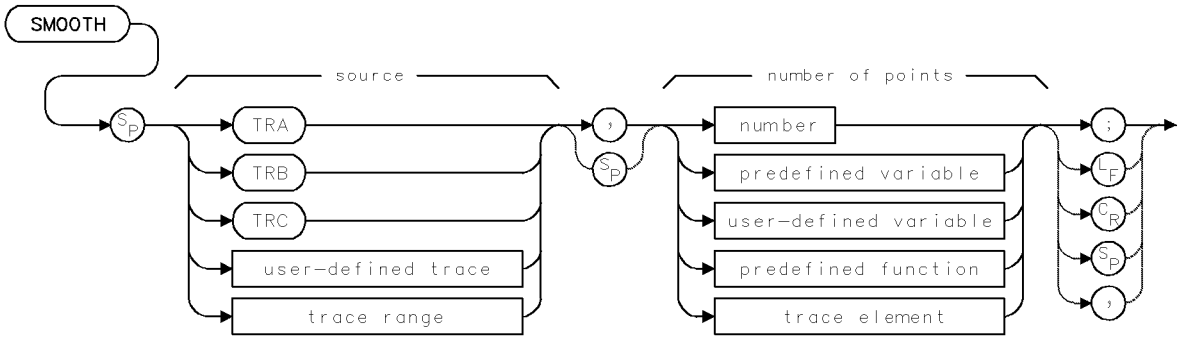


| Item | Description |
|---|---|
| Number-of-Points Range | 3 to length of source |
| Source-Amplitude Range | 0 – 10,000 measurement units for linear trace data. –32,768 – +32,767 measurement units for logarithmic trace data. |
| Source-Length Range | 3 – 1024 position units. Default is 800 position units when using *TRA*, *TRB*, *TRC*. |
| Requirements | Be sure data reflects one complete sweep when using *TRA*, *TRB*, *TRC*, or *trace range* for source. SNGLS and TS suggested. TRDEF required when using *user-defined trace*. VARDEF required when using *user-defined variable*. Requires internal memory. See Appendix D for commands that consume memory. |

## Example

Minimize variations in trace amplitude by using the SMOOTH command.

```
5 CLEAR 718                                          Initialize spectrum analyzer.
7 OUTPUT 718;"IP;"
10 OUTPUT 718;"VARDEF NN,0"                          Define user-defined variable equal to 0.
20 OUTPUT 718;"CF 300MHZ;SP 1MHZ;"                   Set measurement range.
30 OUTPUT 718;"REPEAT;";                             Begin repeat loop.
40 OUTPUT 718;"ADD NN,NN,10;";                       Add 10 to NN.
50 OUTPUT 718;"SNGLS;CLRW TRA;TS;";                  Activate single-sweep mode. Sweep trace A.
60 OUTPUT 718;"VIEW TRA;";                           Store and view trace A.
70 OUTPUT 718;"SMOOTH TRA,NN;";                      Average each point of trace A with points NN/2 either side of it.
80 OUTPUT 718;"CLRDSP;";                             Clear graphics from memory.
90 OUTPUT 718;"PA 100,700;TEXT$Smoothing over $;";   Write text.
```

```
100 OUTPUT 718;"DSPLY NN,4,1;";
110 OUTPUT 718;"PA 740,700;TEXT$points$;";
120 OUTPUT 718;"WAIT 2S;";
130 OUTPUT 718;"UNTIL NN,EQ,100;";
140 OUTPUT 718;"WAIT 1S;"
150 OUTPUT 718;"IP;"
```

*Write the value of NN on the spectrum analyzer display.*

*Wait 2 seconds.*

*End repeat loop when each trace point has been averaged with 50 points on its left, and 50 points on its right side.*

*Wait 1 second.*

*Instrument preset.*

The SMOOTH command smooths the amplitude level of a trace.

The amplitude values of the trace are modified according to the number of points specified for the running average. Each point value is replaced with the average of the values (in measurement units) of the given number of points centered around the point.

The SMOOTH function performs a spatial, video averaging, in comparison to the temporal averaging achieved by the video-averaging command, VAVG. By replacing the value of each point in a trace with the average value of neighboring points, high-frequency noise or signals are attenuated without a corresponding effect on low frequency signals. Thus, the function of SMOOTH resembles narrowing of the video-bandwidth filter without the corresponding increase in sweep time. SMOOTH does reduce frequency resolution.

Use SMOOTH as you would use video filtering to view low level signals near the noise floor.

If the *number of points* parameter is an even number, then *number of points* is increased by one. If *number of points* is greater than the length of the source, then the size of the source is used for the smoothing operation (unless the size of the source is even, in which case the size of the source less 1 is used).

The SMOOTH command requires sufficient internal memory to operate. Once the command is completed, any memory required by the SMOOTH function is released for other operations. See VAVG.

# SNGLS

SINGLE SWEEP

Sweep on demand only.

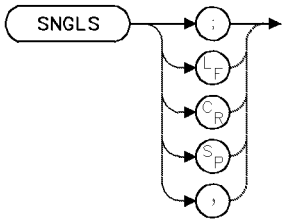


| Item | Description |
|---|---|
| Interdependent Commands | CONTS, DONE, TS, VAVG, ONEOS |

## Example

Activate single-sweep mode.

```
110 OUTPUT 718;"CF 300MHZ;SP 1MHZ;"    Set measurement range.
120 OUTPUT 718;"SNGLS;TS;"             Turn on single-sweep mode and sweep once.
130 OUTPUT 718;"WAIT 2"                Pause program operation for 2 seconds.
140 OUTPUT 718;"TS;"                   Sweep once.
```

The SNGLS command activates the single-sweep mode. During this mode, the spectrum analyzer sweeps once from the start to the stop frequency whenever the TS or SNGLS command is executed and the trigger conditions are met.

**Note** The SNGLS command cannot be substituted for the TS command. Though SNGLS can initiate a sweep, subsequent commands are executed before the sweep is completed. If a sweep is initiated with TS, subsequent commands are not executed until the sweep is completed. See “Program Timing” in the Programming Fundamentals chapter.

# SP

FREQUENCY SPAN

Set span of measurement range.

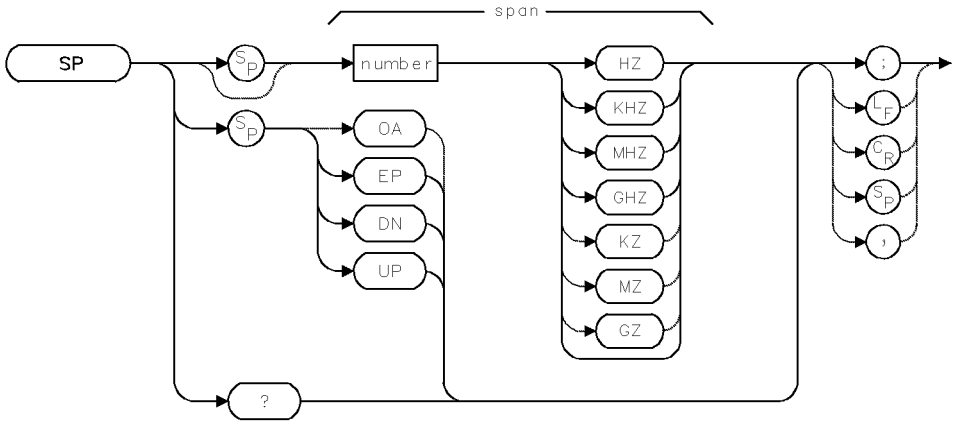


| Item | Description |
|---|---|
| Span Range | Actual range is hardware dependent. Firmware range is 0 – 1000 GHz. |
| Step Increment | 1,2,5,10 sequence |
| Coupling | $F_{span} = F_{stop} - F_{start}$ Sweep time (ST) is coupled to span. Span is coupled to resolution bandwidth (RB). |
| Requirements | Update trace data after executing SP. |
| Interdependent Commands | RB, RBR, VB, and commands affecting frequency such as FA, FB, CF, FS, LOSTART, LOSTOP, HNLOCK, MKSP |
| Preset State | The maximum value allowed by the system configuration. |

## Example

Use markers in zero-span mode to measure time.

```
140 OUTPUT 718;"SP 0;"      Activate zero-span mode.
150 OUTPUT 718;"MKN;"       Place a marker at the center of the display.
160 OUTPUT 718;"MKT?;"      Return the time it takes to sweep to the center of the display.
170 ENTER 718;N             Assign value to computer variable.
```

The SP command changes the frequency range symmetrically around the center frequency. The zero-span mode is activated whenever the span is 0 Hz. Zero-span mode configures the spectrum analyzer as a fixed-tuned receiver, where measured signals are displayed in the time domain instead of the frequency domain.

## Query Response

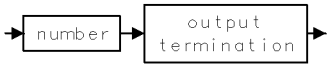

# SQR

SQUARE ROOT

Compute square root.

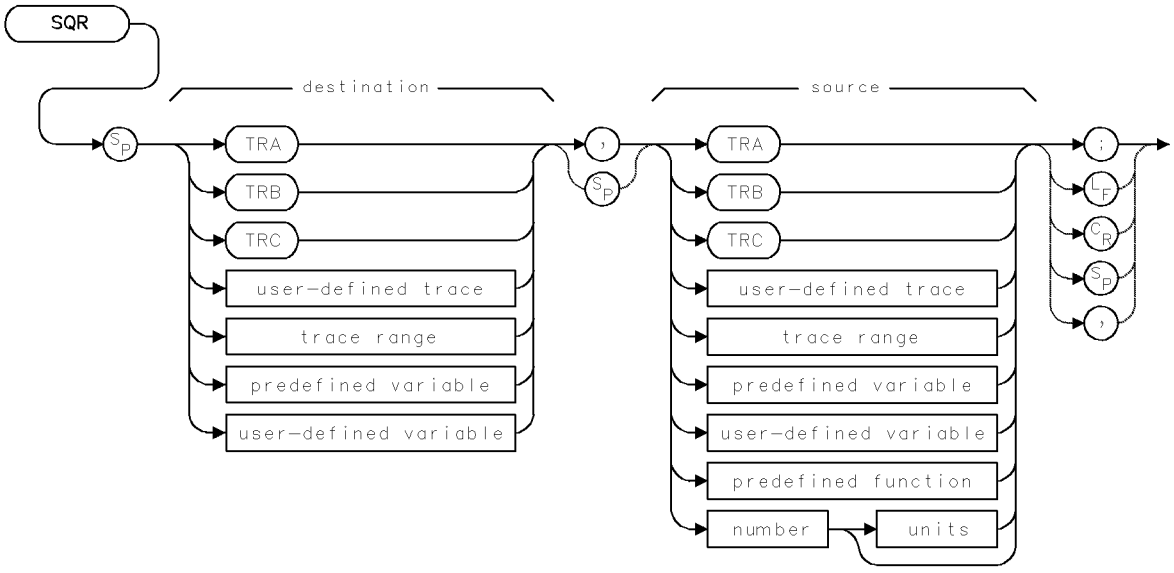


| Item | Description |
|---|---|
| Source-Amplitude Range | 0 – 10,000 measurement units for linear trace data in *TRA*, *TRB*, *TRC*, *trace range*, or *user-defined trace*. −32,768 – +32,767 measurement units for logarithmic trace data in *TRA*, *TRB*, *TRC*, *trace range*, or *user-defined trace*. $\pm 1.8 \times 10^{308}$ when using *number*, *predefined variable*, or *user-defined variable*. |
| Source-Length Range | 1 – 1024 position units. Default is 800 position units when using *TRA*, *TRB*, *TRC*. Truncated if longer than destination length. If shorter than destination length, last element is extended for operation. |
| Destination-Length Range | 1 – 1024 position units. |
| Requirements | Be sure data reflects one complete sweep when using *TRA*, *TRB*, *TRC*, or *trace range* for source. SNGLS and TS suggested. TRDEF required when using *user-defined trace*. VARDEF required when using *user-defined variable*. |

## Example

Set span to square root of another number.

```
110 OUTPUT 718;"SQR SP,1E9;"     Set span to square root of 10 to the ninth power.
120 OUTPUT 718;"TS;"             Measure with new span.
```

Compute square root of source, point-by-point, and store results in the destination.

# SRCALC

SOURCE: AUTOMATIC-LEVEL CONTROL

Selects internal or external level control.

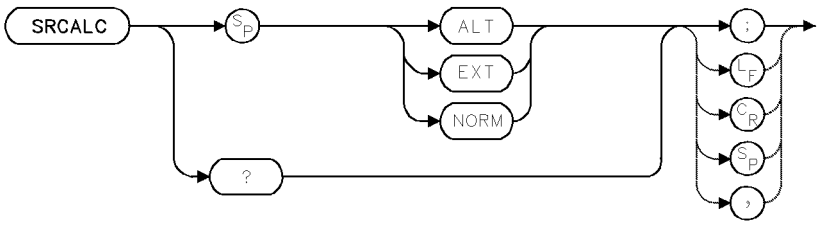


| Item | Description |
|---|---|
| Requirements | Requires tracking-generator module. |
| Interdependent Commands | Commands affecting frequency, such as CF, SP, FA, FB, LOSTART, LOSTOP, HNLOCK, FS |

## Example

Use `SRCALC NORM` to activate normal leveling.

```
140 OUTPUT 718;"SRCALC NORM;"
```

The SRCALC command selects the level detector that maintains the source output at a constant amplitude.

Use `SRCALC NORM` (normal) when measuring between 10 MHz and 2.9 GHz.

Use `SRCALC ALT` (alternate) when measuring from 20 Hz to 10 MHz. Measurements above 10 MHz must be normalized to yield accurate results and avoid flatness problems. `SRC ALT` is not operative with the HP 70301A microwave tracking generator.

Use `SRCALC EXT` (external) to connect the automatic-level-control circuitry to an external, negative level detector. Use an external detector for special measurement situations, such as leveling at the output of an amplifier or splitter. The detector range must be 0 to 100 millivolts. Connect it to the ALC EXT INPUT port on the tracking-generator module.

## Query Response

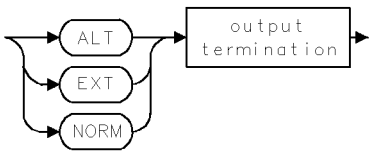

# SRCAM

SOURCE: AMPLITUDE MODULATION

Amplitude-modulate source output.

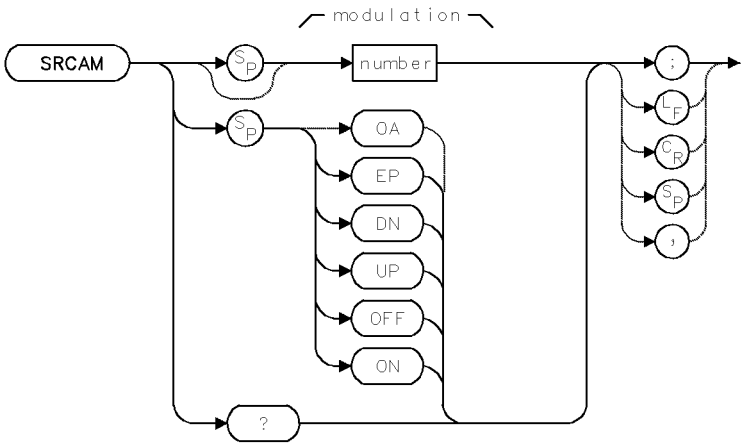


| Item | Description |
|---|---|
| Modulation Range | 0% to 100% or hardware limit. |
| Step Increment | 10% or value determined by SRCPSTP |
| Requirements | Requires HP 70300 Tracking Generator |
| Restrictions | For systems having more than one tracking generator, SRCAM is operative when tracking-generator sweep is within range of HP 70300A RF tracking generator. When HP 70300A RF tracking generator output is active, minimum sweep time is 50 ms. |
| Interdependent Commands | SRCMOD |
| Preset State | `SRCAM OFF; SRCAM 0` |

## Example

Use SRCAM and SRCAMF to control modulation of the source output.

```
150 OUTPUT 718;"SRCAM 100;"        Modulate source output with 100% AM modulation.
160 OUTPUT 718;"SRCAMF 400HZ;"     Set the modulation frequency to 400 Hz.
170 OUTPUT 718;"SRCPWR ON;"        Activate the source output.
```

The SRCAM command modulates the source output with the specified percent of amplitude modulation. Whenever a modulation value is entered or activated with the SRCAM command, the modulation is not turned on until the spectrum analyzer has swept and retuned to the start frequency. The SRCAMF command determines the modulation frequency.

## Query Response

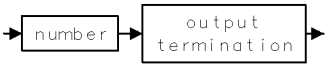

# SRCAMF

SOURCE: AMPLITUDE-MODULATION FREQUENCY

Select modulation frequency of source output.

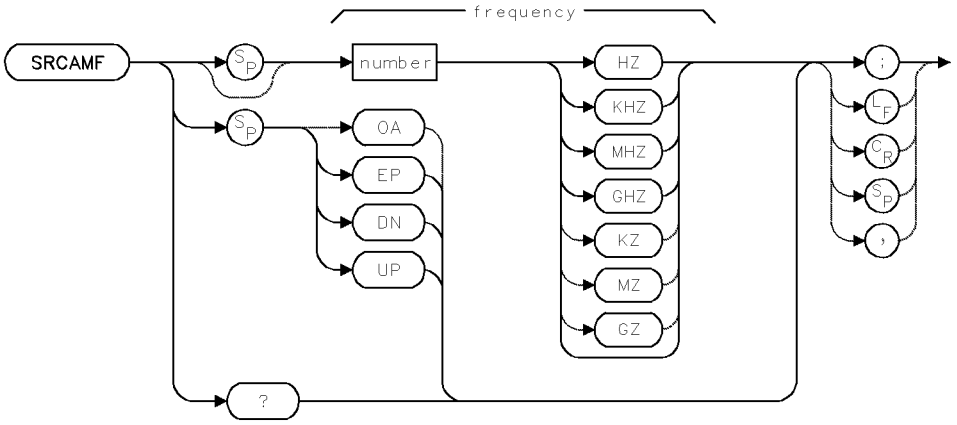


| Item | Description |
|---|---|
| Frequency Range | Hardware dependent |
| Step Increment | 1, 3, 10 sequence, depending on hardware. |
| Requirements | Requires tracking-generator module. |
| Restrictions | Inoperative when HP 70301 Tracking Generator output port is active. |
| Interdependent Commands | SRCMOD |
| Preset State | 1 kHz or hardware limit |

## Example

Use the SRCAM and SRCAMF commands to control modulation of the source output.

```
150 OUTPUT 718;"SRCAM 100;"        Modulate source output with 100% AM modulation.
160 OUTPUT 718;"SRCAMF 400HZ;"     Set the modulation frequency to 400 Hz.
170 OUTPUT 718;"SRCPWR ON;"        Activate the source output.
180 OUTPUT 718;"HD;"               Blank active function readout.
```

The SRCAMF command determines the modulation frequency activated by the SRCAM command.

## Query Response

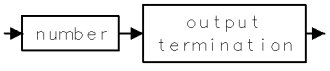

# SRCAT

SOURCE: ATTENUATOR

Attenuate source output level.

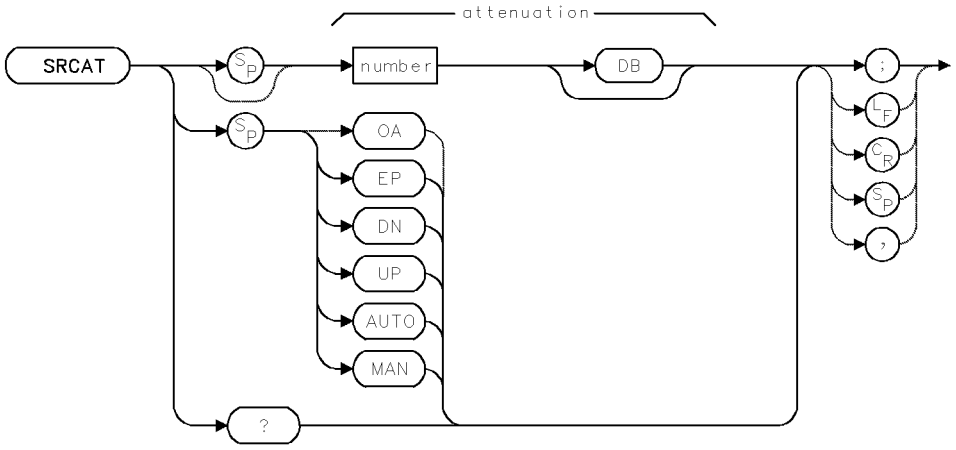


| Item | Description |
|---|---|
| Attenuation Range | Hardware limit |
| Step Increment | Hardware limit, usually 10 dB. |
| Coupling | Coupled to power level of the source output (SRCPWR) when set to auto (`SRCAT AUTO`). |
| Requirements | Requires tracking-generator module. |
| Interdependent Commands | SRCPSTP |
| Preset State | `SRCAT AUTO` |

## Example

Use the SRCAT command to attenuate the source output.

```
210 OUTPUT 718;"SRCAT AUTO;"
220 OUTPUT 718;"SRCPWR ON;"
230 OUTPUT 718;"SRCPWR EP;"
240 OUTPUT 718;"SRCAT 20DB;"
250 OUTPUT 718;"SRCPWR EP;"
```

*Activate source-attenuation coupling.*

*Activate source output.*

*Adjust the source power using the front panel controls. Notice that the power range is from –10 to –95 dBm.*

*Set attenuator to 20 dB. This decouples the attenuator from the source power-level setting.*

*Change the power level with the front panel controls once again. Notice that with the attenuator decoupled, the power range is limited.*

The SRCAT command attenuates the output level of the source. Use SRCAT to attenuate the power level of the source manually, from 10 to 70 dB in 10 dB steps.

`SRCAT AUTO` automatically adjusts the attenuator to yield the source amplitude level specified by the SRCPWR command.

`SRCAT MAN` disconnects coupling between the SRCAT and SRCPWR settings. The SRCAT setting is no longer affected by the SRCPWR setting.

## Query Response

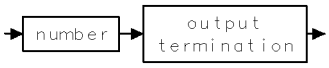

# SRCBLNK

SOURCE: BLANK

Reduce source output level during retrace.

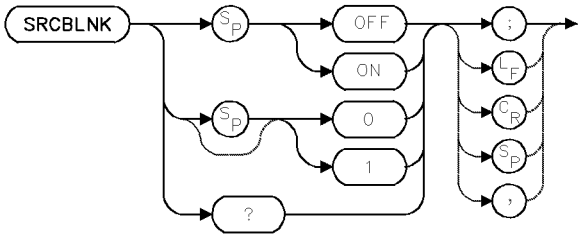


| Item | Description |
|---|---|
| Requirements | Requires tracking-generator module. |
| Preset State | `SRCBLNK OFF` |

## Example

Use SRCBLNK to turn off the source output during retrace.

```
110 OUTPUT 718;"SRCBLNK ON;"     Turn off source output.
```

The SRCBLNK command reduces the source output to a low level during retrace. Execute `SRCBLNK ON` when measuring devices sensitive to power levels of 5 dBm or greater.

## Query Response

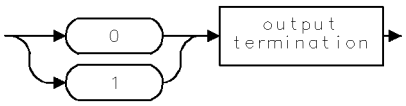

# SRCMOD

SOURCE: MODULATION INPUT

Select modulation source.

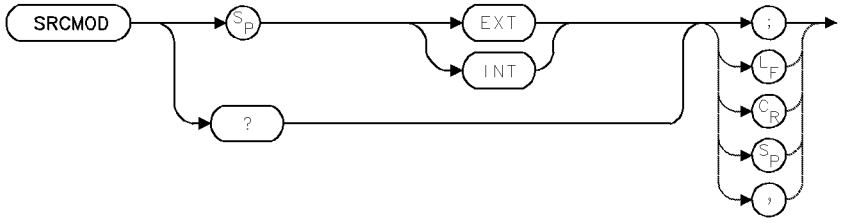


| Item | Description |
|---|---|
| Requirements | Requires tracking-generator module. |
| Restrictions | Internal modulation is not available with HP 70301 Tracking Generator. |
| Interdependent Commands | SRCAMF, SRCAM |
| Preset State | SRCMOD INT |

## Example

Use SRCMOD to configure the tracking generator to receive an external modulation source.

```
110 OUTPUT 718;"SRCMOD EXT;"
```

The SRCMOD command selects the internal or external amplitude modulation source.

## Query Response

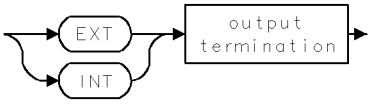

# SRCOSC

SOURCE: OSCILLATOR

Select internal or external source oscillator.

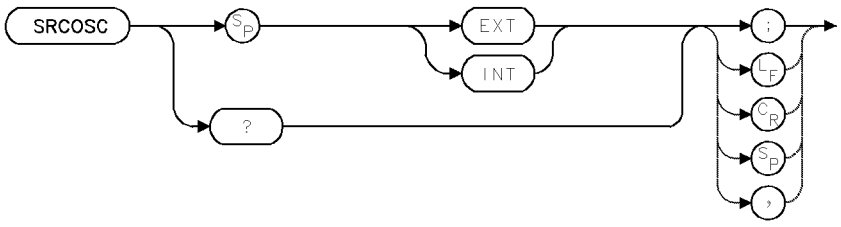


| Item | Description |
|---|---|
| Requirements | Requires tracking-generator module. |
| Restrictions | Inoperative when HP 70301 Tracking Generator output port is active. |
| Preset State | `SRCOSC INT` |

## Example

Configure the tracking generator to operate with an external oscillator.

```
110 OUTPUT 718;"SRCOSC EXT;"
```

The SRCOSC command configures the tracking generator to operate with different oscillators:

`SRCOSC INT` (internal) uses the 21.4 MHz oscillator in the local oscillator module.

`SRCOSC EXT` (external) uses an external oscillator that can be from 11.4 MHz to 31.4 MHz and is applied to the 21.4 MHz input on the tracking-generator rear panel. Use `SRCOSC EXT` to offset the source output up to 10 MHz.

## Query Response

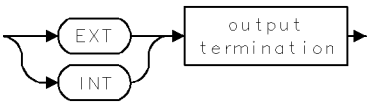

# SRCPOFS

SOURCE: POWER OFFSET

Offset source power level.

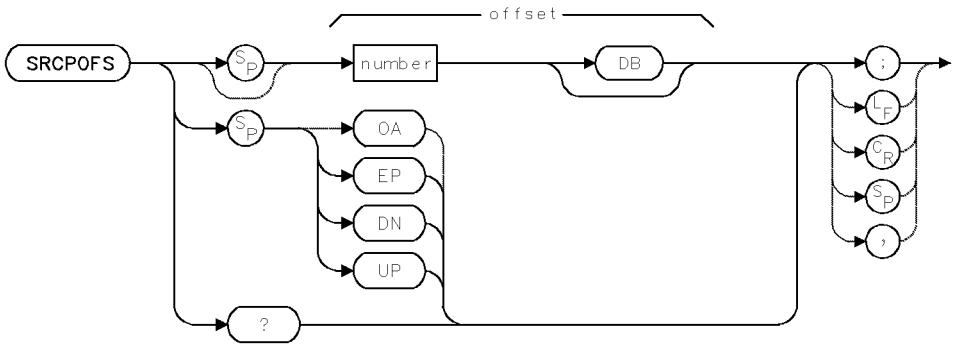


| Item | Description |
|---|---|
| Offset Range | Actual range is hardware dependent. Firmware range is ± 300 dB |
| Step Increment | Determined by SRCSTP |
| Requirements | Requires tracking-generator module. |
| Interdependent Commands | SRCPWR, SRCPSWP, SRCPSTP |
| Preset State | SRCPOFS 0 dB |

## Example

Use SRCPOFS to offset the power-level readout for the tracking-generator source.

```
140 OUTPUT 718;"MEASURE SR;"      Set spectrum analyzer to stimulus-response mode.
150 OUTPUT 718;"SRCPWR ON;"       Turn on source output.
160 OUTPUT 718;"SRCPOFS 13DB;"    Offset power-level readout for source by 13 dB.
```

The SRCPOFS command offsets the readout for the source power level by the specified amount. Execute SRCPOFS 0 dB to remove the offset. The source power level can be changed by increments specified by the SRCSTP command. See SRCPSTP.

## Query Response

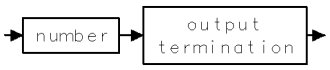

# SRCPSTP

SOURCE: POWER-LEVEL STEP SIZE

Select source-power step size.

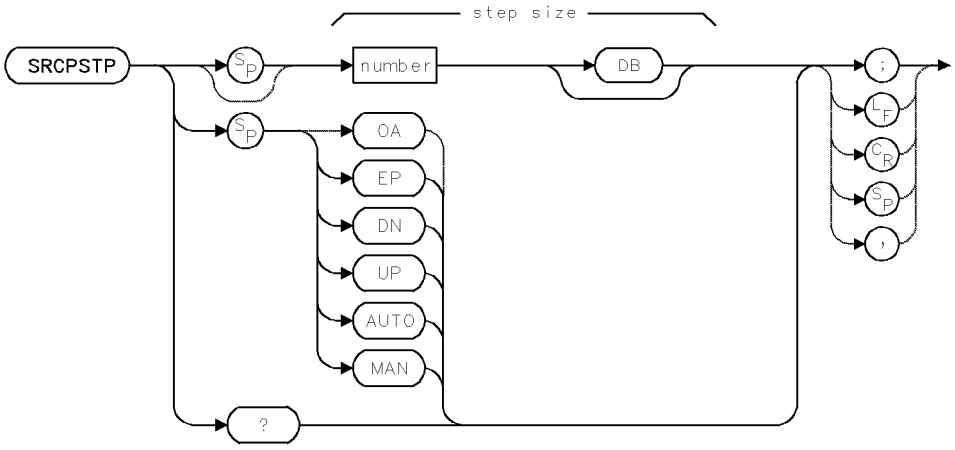


| Item | Description |
|---|---|
| Step-Size Range | ± 300 dB |
| Step Increment | 1, 2, 5, 10 sequence |
| Requirements | Requires tracking-generator module. |
| Interdependent Commands | SRCPWR, SRCPOFS, SRCPSWP |
| Preset State | `SRCPSTP AUTO` (1 major vertical scale division.) |

## Example

Select incremental changes of power effected by `SRCPWR UP`, `SRCPWR DN` commands, or the step keys.

```
150 OUTPUT 718;"MEASURE SR;"      Activate stimulus-response mode.
160 OUTPUT 718;"SRCPWR ON;"       Turn on the source output.
170 OUTPUT 718;"SRCPSTP .3DB;"    Set power-level step size to .3 dB.
180 OUTPUT 718;"SRCPWR EP;"       Change source power level using the front panel
                                  controls. Note also how slowly the power level
                                  changes as you turn the knob.
```

The SRCPSTP command selects the step size for the following source commands:

- Power offset (SRCPOFS)
- Power sweep (SRCPSWP)
- Power (SRCPWR)

Use SRCPSTP to set the step size to a specific value.

`SRCPSTP AUTO` sets the step size to one vertical scale division
`SRCPSTP MAN` resets the step size to the last selected step size.

## Query Response

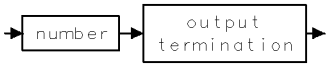

# SRCPSWP

SOURCE: POWER SWEEP

Select sweep range of source output.

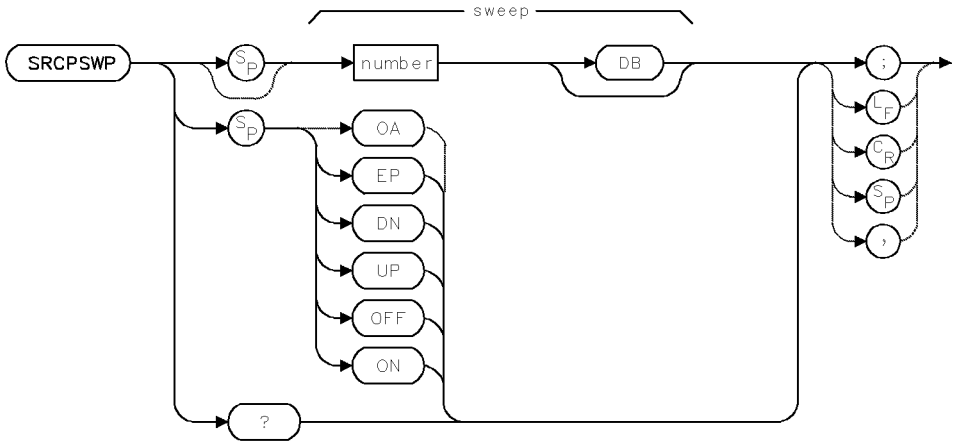


| Item | Description |
|---|---|
| Sweep Range | Actual limit is hardware dependent. Firmware limit is 300 dB. |
| Step Increment | Determined by SRCPSTP. |
| Requirements | Requires tracking-generator module. |
| Restrictions | Inoperative when HP 70301 Tracking Generator output port is active. When HP 70300A RF tracking generator output is active, minimum sweep time is 50 ms. |
| Interdependent Commands | SRCPSWP, SRCPOFS, SRCPSTP |
| Preset State | SRCPSWP OFF |

## Example

Use SRCPSWP to sweep the power level of the source output.

```
130 OUTPUT 718;"MEASURE SR;"       Activate stimulus-response mode.
140 OUTPUT 718;"SRCPWR -30DBM;"    Set power level of source output to –30 dBm.
150 OUTPUT 718;"SP 0;"             Set span to 0 Hz.
160 OUTPUT 718;"SRCPSWP 10DB;"     Sweep source output from –30 dBm to –20 dBm.
```

The SRCPSWP command works in conjunction with the SRCPWR (source power) command to sweep the amplitude level of the source output. The SRCPWR setting determines the amplitude level at the beginning of the sweep. The SRCPSWP command determines the amplitude level at the end of the sweep, relative to the beginning of the sweep. For example, if SRCPWR and SRCPSWP are set to –21 dBm and 10 dB respectively, the source sweeps from –21 dBm to –11 dBm.

## Query Response

# SRCPWR

SOURCE: POWER

Select source power level.

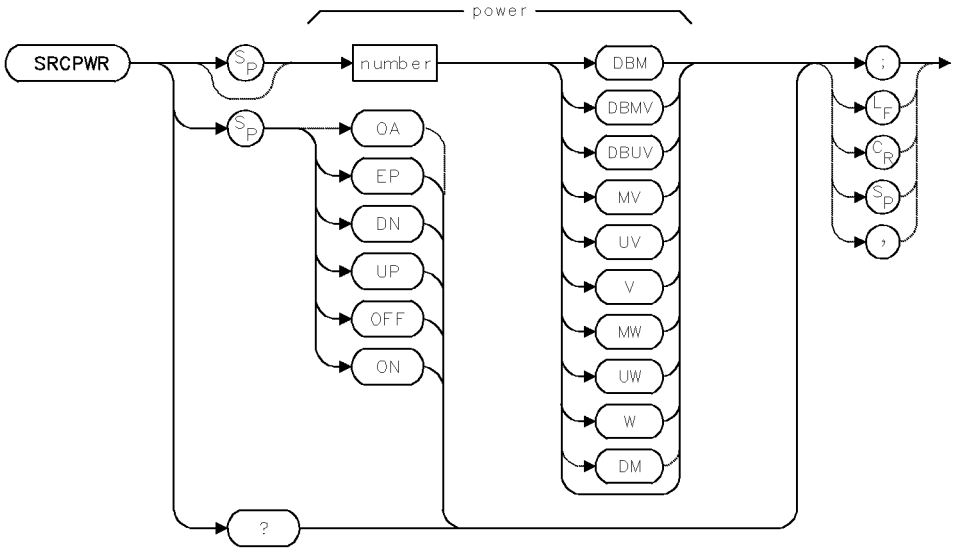


| Item | Description |
|---|---|
| Power Range | Actual range is hardware dependent. Firmware range is ± 300 dBm. |
| Step Increment | Set by SRCPSTP. |
| Requirements | Requires tracking-generator module. |
| Interdependent Commands | SRCAT, SRCPSTP, SRCPSWP |
| Preset State | SRCPWR -10DBM |

## Example

Use SRCPWR to turn on the power at the source output.

```
180 OUTPUT 718;"SRCPWR ON;"          Turn power of source output on to its current setting.
190 OUTPUT 718;"SRCPWR -20DBM;"      Change power level to –20 dBm.
```

The SRCPWR command sets the power level of the source or turns it off or on. The source is turned on automatically whenever its value is specified with SRCPWR. See SRCPSTP.

## Query Response

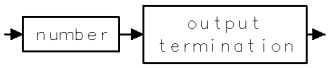

# SRCTK

SOURCE: TRACKING

Adjust tracking of source output with spectrum analyzer sweep.

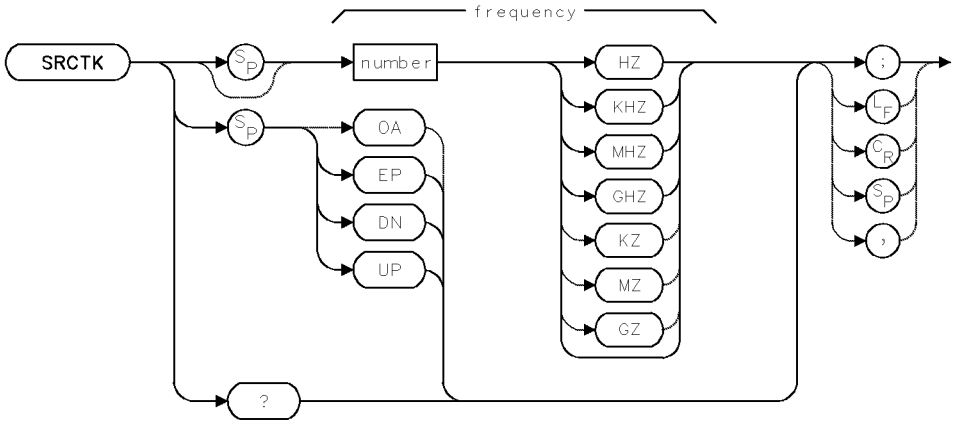


| Item | Description |
|---|---|
| Range | Actual range is hardware dependent. Firmware range is ±1000 GHz. |
| Step Increment | 10 Hz |
| Requirements | Requires tracking-generator module. |
| Restrictions | Active only when tracking generator is in system. |
| Interdependent Commands | Commands that change bandwidth, such as RB, VB, ST, and commands that change frequency, such as SP, CF, FA, FB, SP, LOSTART, LOSTOP, FS |
| Preset State | SRCTK 0HZ |

## Example

Adjust tracking of tracking-generator module for bandwidths less than 300 Hz.

```
150 OUTPUT 718;"MEASURE SR;"      Activate the stimulus-response mode.
160 OUTPUT 718;"SRCPWR ON;"       Turn on the power at the source output.
170 OUTPUT 718;"SP 1MHZ;"         Set measurement range.
180 OUTPUT 718;"RB 100HZ;"
190 OUTPUT 718;"TS;"              Sweep.
200 OUTPUT 718;"SRCTK;"           Adjust tracking.
```

The SRCTK command adjusts the tracking of the tracking-generator output with the sweeping of the spectrum analyzer local oscillator. SRCTK is used typically for bandwidths less than 300 Hz. Bandwidths greater than 2 kHz do not require tracking adjustment. Use SRCTK to improve amplitude accuracy and maximize signal response. Use SRCTKPK to adjust tracking automatically. See SRCTKPK.

## Query Response

# SRCTKPK

SOURCE: TRACKING PEAK

Automatically adjust tracking of source output with spectrum analyzer sweep.

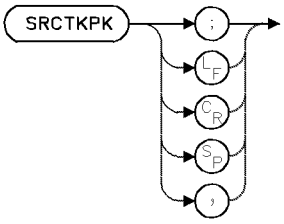


| Item | Description |
|---|---|
| Requirements | Requires tracking-generator module. |
| Interdependent Commands | Commands that change bandwidth, such as RB, VB, ST, and commands that change frequency, such as SP, CF, FA, FB, SP, LOSTART, LOSTOP, FS |

## Example

Automatically adjust the tracking of the tracking-generator module output.

```
150 OUTPUT 718;"MEASURE SR;"     Activate the stimulus-response mode.
160 OUTPUT 718;"SRCPWR ON;"      Turn on the power at the source output to its current
                                 setting.
170 OUTPUT 718;"SP 1MHZ;"        Set measurement range.
180 OUTPUT 718;"RB 1KHZ;"
190 OUTPUT 718;"TS;"             Sweep.
200 OUTPUT 718;"SRCTKPK;"        Automatically adjust the tracking.
```

The SRCTKPK command automatically adjusts the tracking of the tracking-generator source output to maximize responses for measurements made with resolution bandwidths less than 2 kHz.

SRCTKPK maximizes the amplitude at the displayed active marker. If the active marker is not displayed, SRCTKPK places it at the highest signal on trace A, B, or C (in that order), and then adjusts tracking. See SRCTK.

# SRQ

SERVICE REQUEST

Set bit(s) in status-byte register to simulate service request.

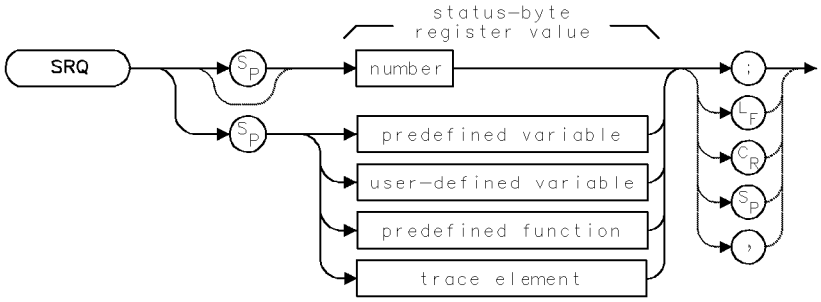


| Item | Description |
|---|---|
| Range | 0 – 255 |
| Requirements | VARDEF when using *user-defined variable*. |

The SRQ command simulates service requests by setting bits in the status-byte register. Use the SRQ command to test the operation of programs containing service requests. For example, suppose your program branched to a subroutine whenever a spectrum analyzer error was detected. Instead of testing the program by initiating spectrum analyzer errors, execute `SRQ 32` to simulate an error condition. See CLS, RQS, and STB. See also "Monitoring System Operation" in the Programming Fundamentals chapter.

**Table 2-23. Spectrum-Analyzer Status-Byte Register**

| Bit Number | Decimal Equivalent | Spectrum-Analyzer State | Description |
|---|---|---|---|
| 7 | 128 | | Unused. |
| 6 | 64 | RQS | Set when status-byte register bit and corresponding bit in service-request mask are true. Indicates service-request has occurred. |
| 5 | 32 | ERROR PRESENT | Set when error register contains an error. |
| 4 | 16 | COMMAND COMPLETE | Set at completion of command execution. |
| 3 | 8 | | Unused |
| 2 | 4 | END OF SWEEP | Set at completion of sweep. |
| 1 | 2 | MESSAGE | Set when messages appear, such as UNCAL (uncalibrated), UNCOR (uncorrected), or power bar zeroing. |
| 0 | 1 | TRIGGER ARMED | Set when analyzer is ready to receive a sweep trigger. |

# SS

CENTER-FREQUENCY STEP SIZE

Set center-frequency step size.

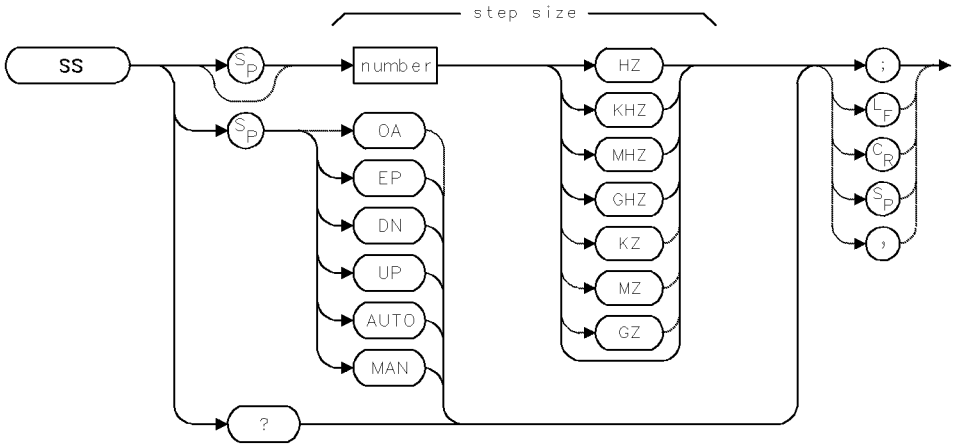


| Item | Description |
|---|---|
| Step-Size Range | Actual range is hardware dependent. Firmware range is ± 1000 GHz. |
| Step Increment | 1, 2, 5, 10 sequence |
| Interdependent Commands | CF, MKSS |
| Preset State | `SS AUTO` - See description below. |

## Example

Use the SS command to change the center frequency.

```
5 CLEAR 718                          Initialize spectrum analyzer.
7 OUTPUT 718;"IP;"
10 OUTPUT 718;"CF 300MHZ;SP 400MHZ;"  Set measurement range.
20 OUTPUT 718;"SS 10MHZ;"             Set step size to 10 MHz.
30 OUTPUT 718;"CF UP;"                Increase center frequency by one step size
                                      (10 MHz).
40 OUTPUT 718;"TS;"                   Sweep.
```

The SS command determines the amount the center frequency changes whenever `CF UP` or `CF DN` is executed. (See CF.) The increment that SS specifies is called a step.

`SS AUTO` activates the default step size. For spans greater than zero, the step size equals span/10. For spans equal to zero, the step size equals the resolution bandwidth.

`SS MAN` activates the step size previously specified by SS.

## Query Response

# ST

SWEEP TIME

Set the time it takes to sweep from the start frequency to the stop frequency.

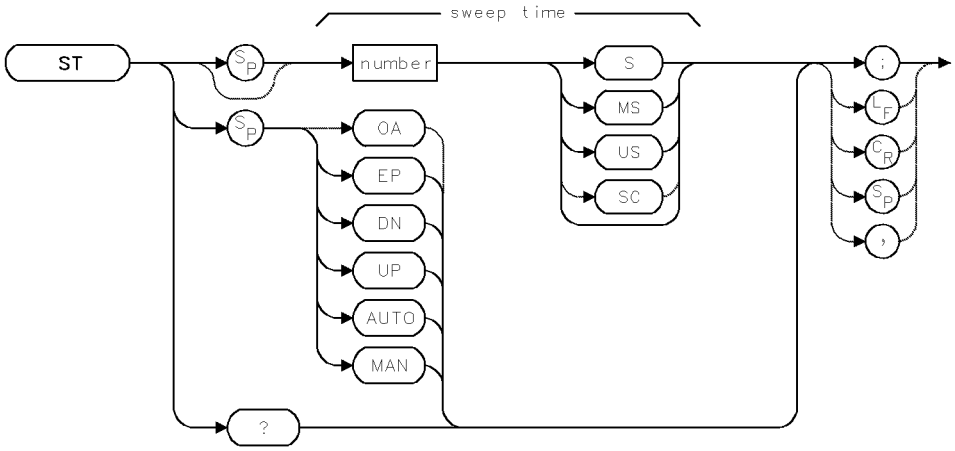


| Item | Description |
|---|---|
| Sweep-Time Range | 0 – 1000 seconds, or hardware limit. |
| Step Increment | 1, 2, 5, 10 sequence |
| Coupling | Coupled to resolution bandwidth (RB), video-bandwidth (VB), and span (SP). OVRSWP affects coupling. |
| Interdependent Commands | RB, VB, SP, ASWP, OVRSP |
| Preset State | `ST AUTO` |

## Example

Use ST to set the sweep time.

```
110 OUTPUT 718;"CF 300MHZ;SP 1MHZ;"    Set measurement range.
120 OUTPUT 718;"ST 1S;"                Set sweep time to 1 second.
```

The ST command specifies the rate the spectrum analyzer sweeps the current measurement range. The sweep time and resolution and video bandwidths are coupled to yield the maximum signal amplitude. Selecting a sweep time with ST, or executing `ST MAN` breaks the coupling. Execute `ST AUTO` to reestablish coupling.

Faster sweep times or measurements are available by changing spectrum analyzer settings as follows:

- Reduce trace length (TRDEF). The spectrum analyzer requires 10 ms to store measurement results in an 800-point trace. Reducing trace length reduces storage time proportionately.
- Reduce the measurement range (SP). The local oscillator requires 10 ms to sweep from 3 to 6 GHz. Reducing the span reduces the required sweep time proportionately.
- Use wide video and resolution bandwidths (VB and RB) or decouple the video- and resolution bandwidth settings from the sweep time setting (`ST MAN`). However, decoupling can affect amplitude accuracy.

- Executing `OVRSWP ON` allows an additional 2% of frequency error and 2 dB of amplitude error before the "UNCAL" indicator appears. Use `OVRSWP ON` to obtain faster sweep times (up to five times faster) when optimum accuracy is not required and the "UNCAL" indicator is undesirable. (See OVRSWP.)

The time between each sweep (retrace time) is reduced when the active trace and annotation are not displayed (`ANNOT OFF; TRDSP OFF`).

See TRDEF, TRDSP, ANNOT, RB, VB, and ASWP.

## Query Response

# STARTUP

START UP

Controls the start up configuration operation of the spectrum analyzer.

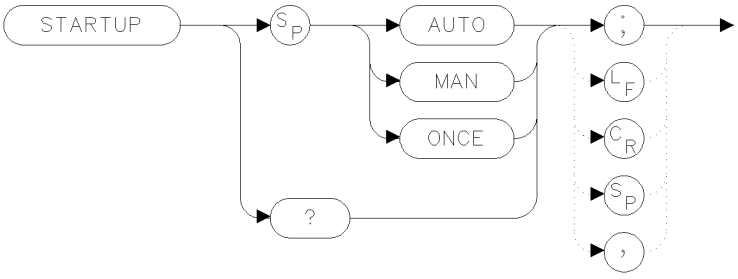


xstrup

| Item | Description |
|---|---|
| Inter-Dependent Commands | POWERON, IP |
| Preset State | ONCE (no argument) |

**CAUTION** The STARTUP MAN and STARTUP ONCE commands both result in the loss of any internal calibration data when the system restarts. This is because the data is part of the configuration. In addition, STARTUP MAN and STARTUP ONCE both force the POWERON command into IP if it was in LAST.

## Example

```
100 OUTPUT 723;"STARTUP AUTO;"
```

When the spectrum analyzer powers up, it attempts to determine if the configuration of slave modules that it is supposed to control has changed from the last time the spectrum analyzer powered up. If a change is seen, such as a new module in the slave space or a different model number slave in a previously occupied slot, a reconfiguration operation is performed.

There are times when this sequences of tests fails. The most common failure is when a slave has been updated to have new capabilities. Since the same slave is seen in the same slot, the system incorrectly assumes that a reconfiguration is not needed. The STARTUP command allows such a situation to be corrected.

| Argument | Definition |
|---|---|
| AUTO | Selects the automatic sequence which reconfigures only when a slave space change is detected (this is the default operation). |
| MAN | Forces the system to reconfigure at each power up. |
| ONCE | Forces the system to reconfigure. After the reconfiguration, the value of reverts to AUTO. |

For both STARTUP MAN and STARTUP AUTO, no effect is seen until the next power cycle. When the STARTUP ONCE command is executed, the instrument immediately releases its links to all of its slaves and break its links (if any) to a display. After the link manipulations and

communications are complete, the spectrum analyzer performs a warm start reconfiguration with a power-up IP. After the reconfiguration the value of STARTUP reverts to AUTO.

## Query Response

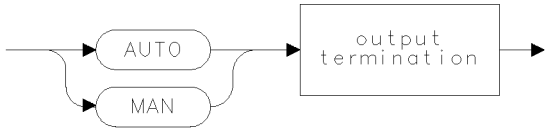


qstrup

# STATE

INSTRUMENT STATE

Return or receive all instrument state.

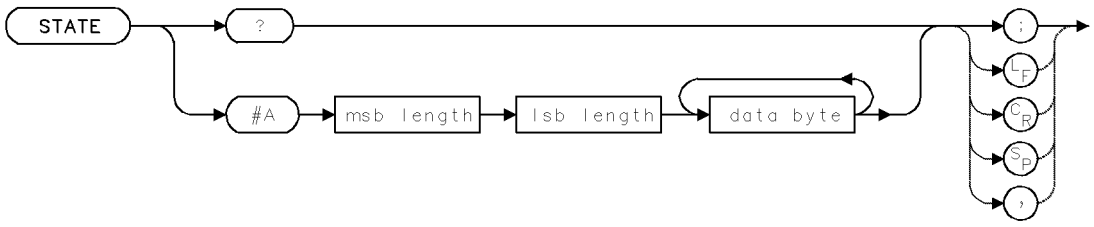


## Example

Use the STATE command to transmit the analyzer settings and measurement results to and from a computer.

```
140 ALLOCATE State$[1000]              Allocate a string variable array, State, for storing the spectrum analyzer state in the computer.
150 OUTPUT 718;"CF 303E6;SP 10E6;"     Set measurement range.
160 OUTPUT 718;"STATE?;"               Return spectrum analyzer state to computer.
170 ENTER 718 USING "-K";State$        Save response in State in the form of ASCII tokens, requiring a special image ("-K") to receive the data.
180 OUTPUT 718;"WAIT 1S;"              Wait a second.
190 OUTPUT 718;"IP;"                   Preset spectrum analyzer state.
200 OUTPUT 718;"WAIT 2S;"              Wait 2 seconds.
210 OUTPUT 718;State$[5];              Restore spectrum analyzer state by transmitting the relevant contents of State from the computer back to the spectrum analyzer, starting with 5 element in array.
```

The STATE command transmits all instrument-state information from or to a computer. This includes front panel settings.

## Query Response

Initial data in *data byte* is "SDATE #A".

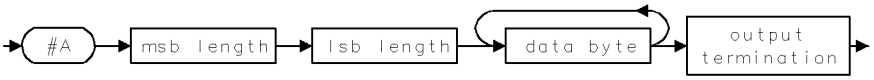

# STB

STATUS BYTE

Return value of **status-byte register**.

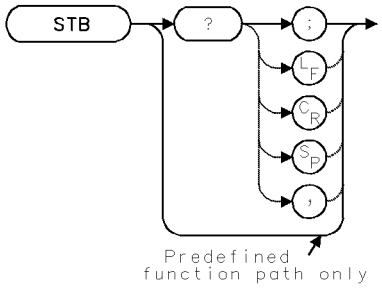


| Item | Description |
|---|---|
| Interdependent Commands | CLS, SRQ |

## Example

Monitor spectrum analyzer operation without using service-request methods.

```
10 CLEAR 718                  Preset spectrum analyzer.
20 OUTPUT 718;"IP;CLRDSP;"
30 OUTPUT 718;"SNGLS;"        Activate single-sweep mode.
40 OUTPUT 718;"CLS;"          Clear status-byte register.
50 OUTPUT 718;"TS;"           Sweep spectrum analyzer.
60 OUTPUT 718;"STB?;"         Return status of status-byte, then clear it. The value
                              returned is the sum of 16 (command complete), 4 (end
                              of sweep), and 1 (trigger armed), which equals 21.
70 ENTER 718;N                Assign value to computer.
80 OUTPUT 718;"STB?;"         Return status of status-byte. Value returned is 16
                              (command complete), since this is the only task the
                              spectrum analyzer has performed since the status-byte
                              was cleared in line 60.
90 ENTER 718;M
100 DISP N,M
```

Use the STB command to monitor spectrum analyzer operation. Certain multiple-tasked computer systems, such as UNIX-based computers, monitor spectrum analyzer operation more efficiently with the STB command than with the service-request command, RQS.

Use STB to monitor spectrum analyzer operation randomly at any time. Executing STB is similar to conducting a serial poll of the status-byte register. When STB is executed, the status-byte register is cleared (all bits set to zero).

The STB command returns the decimal equivalent of the status-byte register. For example, the COMMAND-COMPLETE and ERROR-PRESENT bits are set when 48 (16 + 32) is returned.

Executing `STB?` always sets the command-complete bit. For this reason, STB cannot be used to monitor the completion of commands. (See DONE.)

**STB**

STB must be used as either a query or as a source in another analyzer-command function. Form a query by ending the STB statement with ?. When used as a query, STB returns the decimal equivalent of the status-byte register to the computer.

Use STB as a source by incorporating the STB statement into the source of any spectrum analyzer command having *predefined function* in its syntax diagram. When STB is used as a source, the decimal equivalent is used for operation by the command that contains STB.

See RQS. See also "Monitoring System Operation" in "Programming Fundamentals."

**Table 2-24. Spectrum-Analyzer Status-Byte Register**

| Bit Number | Decimal Equivalent | Spectrum-Analyzer State | Description |
|---|---|---|---|
| 7 | 128 | | Unused. |
| 6 | 64 | RQS | Set when status-byte register bit and corresponding bit in service-request mask are true. Indicates service-request has occurred. |
| 5 | 32 | ERROR PRESENT | Set when error register contains an error. |
| 4 | 16 | COMMAND COMPLETE | Set at completion of command execution. |
| 3 | 8 | | Unused. |
| 2 | 4 | END OF SWEEP | Set at completion of sweep. |
| 1 | 2 | MESSAGE | Set when messages appear, such as UNCAL (uncalibrated), UNCOR (uncorrected), or power bar zeroing. |
| 0 | 1 | TRIGGER ARMED | Set when analyzer is ready to receive a sweep trigger. |

## Predefined-Function Syntax

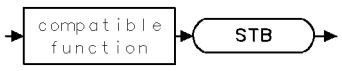


## Query Syntax

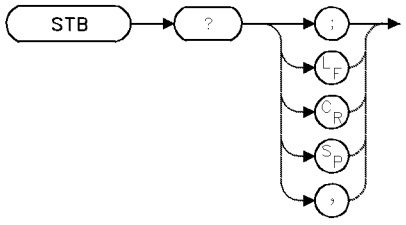

## Query Response

# STDEV

STANDARD DEVIATION OF TRACE AMPLITUDES

Compute standard deviation.

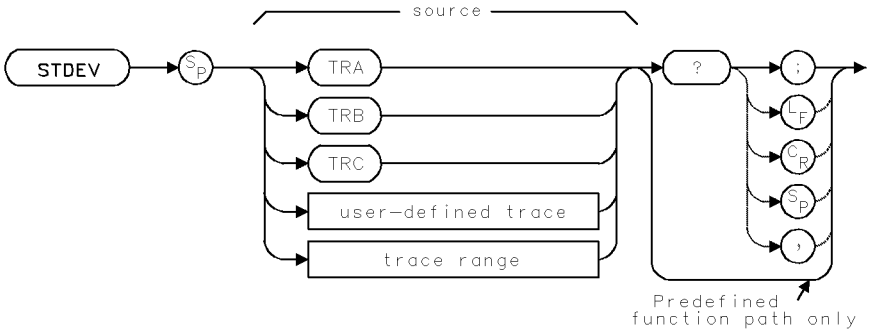


| Item | Description |
|---|---|
| Source-Amplitude Range | 0 – 10,000 measurement units for linear trace data. –32,768 – +32,767 measurement units for logarithmic trace data. |
| Source-Length Range | 3 – 1024 position units. Default is 800 position units when using *TRA*, *TRB*, *TRC*. |
| Requirements | Be sure data reflects one complete sweep when using *TRA*, *TRB*, *TRC*, or *trace range* for source. SNGLS and TS suggested. TRDEF required when using *user-defined trace*. |

## Example

Return the standard deviation of a trace.

```
130 OUTPUT 718;"SNGLS;"                          Activate single-sweep mode.
140 OUTPUT 718;"CF 300MHZ;SP 2MHZ;RB 100KHZ;"    Set measurement range.
150 FOR N=1 TO 10                                Begin repeat loop using system
                                                 level commands in HP BASIC.
160 WAIT 1                                       pause.
170 OUTPUT 718;"SP DN;TS;"                       Reduce the span. Sweep trace A.
180 OUTPUT 718;"STDEV TRA?;"                     Return standard deviation of trace
                                                 A.
190 ENTER 718;S                                  Assign value to computer variable.
200 PRINT "Standard deviation is";S/100;"DB"
210 NEXT N                                       End repeat loop.
```

The STDEV command returns the standard deviation of the trace amplitude, in measurement units.

STDEV must be used as either a query or as a source in another analyzer-command function. Form a query by ending the STDEV statement with a question mark (?). When used as a query, STDEV returns the standard deviation to the computer.

Use STDEV as a source by incorporating the STDEV statement into the source of any spectrum analyzer command having *predefined function* in its syntax diagram. When STDEV is used as a source, the standard deviation is used for operation by the command that contains STDEV.

## Predefined-Function Syntax

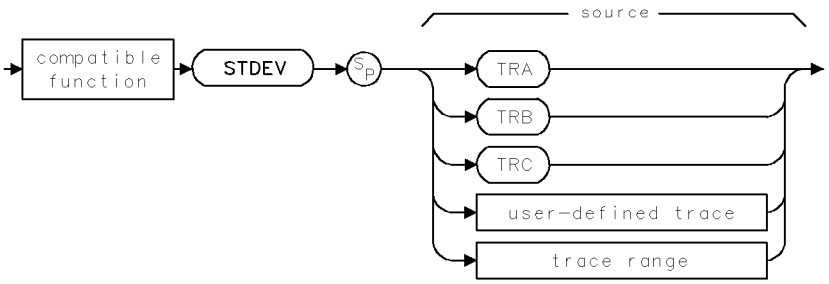


## Query Syntax

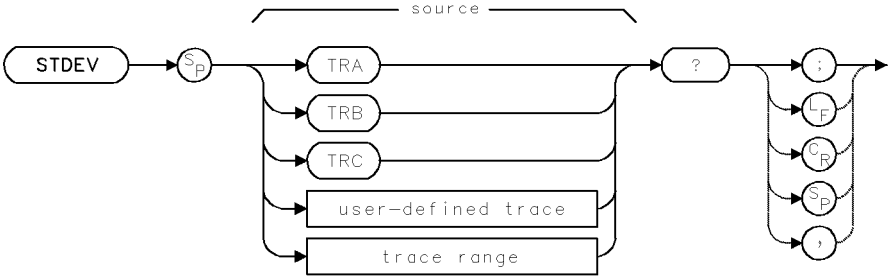


## Query Response

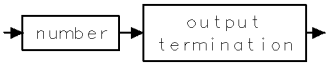

# STOR

STORE FILE

Store user-defined articles.

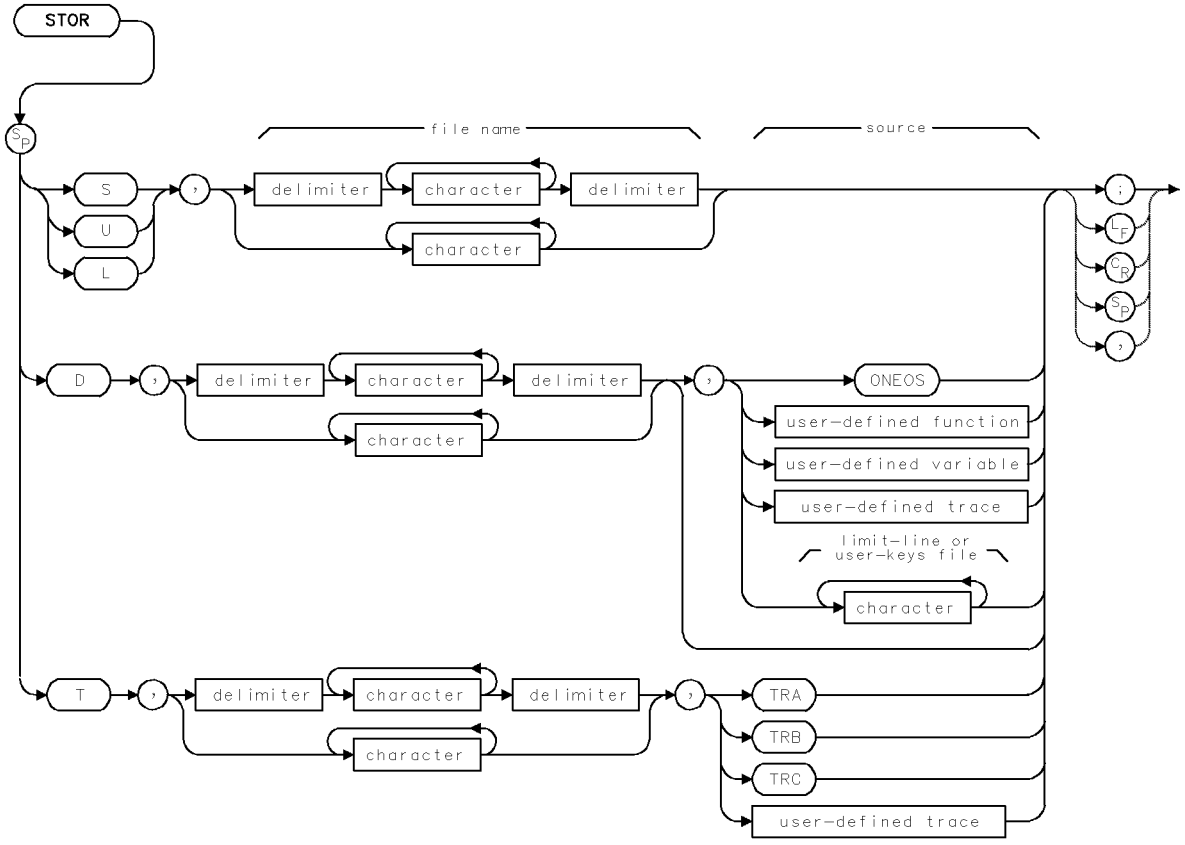


| Item | Description |
|---|---|
| File-Name Range | 0 – 10 characters |
| Requirements | Delimiters required before and after *file name* when it contains a number or lower-case letters. When *file name* is upper-case alpha characters only, delimiters are optional.<br>To select storage location (HP-IB device, HP-MSIB device, or internal memory), execute MSI before executing STOR. Internal memory is the storage device when power is applied to the spectrum analyzer. Requires memory. See Appendix D. |
| Interdependent Commands | PROTECT, PSTATE |

STOR stores files in user memory, which is the currently selected mass storage device. Unless specified otherwise by the MSI command, internal memory is the storage device.

The information stored depends on the argument selected.

S stores the current instrument settings and the contents of the title line.

D stores all of the following user-defined articles in **external memory** only.

- user-defined variable
- user-defined function
- on-end-of-sweep algorithm
- user-defined trace
- user-defined keys
- limit lines

T stores trace A, B, or C, or a user-defined trace. If the item for storage is not specified, trace A is stored.

U stores the current configuration of keys accessed with the (USER) key.

L stores the current contents of the limit-line table.

When storing a user-defined article, enter its complete name. To verify names, view the catalog of user memory. (Press `State`, recall, `catalog & MSI` to view the catalog.) Recall stored files with the LOAD command. Erase stored files with the PURGE or DISPOSE command. Use the PROTECT command to prevent inadvertent file erasure from internal memory only. (The PROTECT command does not prevent erasure with the PURGE, PERASE, or ERASE command.)

**Table 2-25. Description of User-Memory Catalog**

| Article Stored | Storing Command | File Type | Standard File Prefix |
|---|---|---|---|
| user-defined function† | FUNCDEF, RCLD, LOAD | FUNC | none |
| active user-defined function† | ACTDEF, RCLD, LOAD | AFUNC | none |
| user-defined variable† | VARDEF, RCLD, LOAD | VAR | none |
| user-defined trace† | TRDEF, LIMILINE, RCLD, LOAD | TRACE | none |
| on-end-of-sweep algorithm† | ONEOS, RCLD, LOAD | ONEOS | none |
| file containing user-key menu | SAVEU, STOR | ASCII | u_ |
| file containing trace | SAVET, STOR | ASCII | t_ |
| file containing user-defined variable* | SAVED, STOR | ASCII | d_ |
| file containing user-defined function* | SAVED, STOR | ASCII | d_ |
| file containing on-end-of-sweep algorithm* | SAVED, STOR | ASCII | d_ |
| file containing limit line | LIMISAV, STOR | ASCII | l_ |
| file containing state register (instrument settings and title-line) | SAVES, STOR | ASCII | s_ |

*Stored in external memory only.

† Stored in internal memory only.

# STORREF

STORE REFERENCE

Store open, short, or through references for stimulus-response measurements.

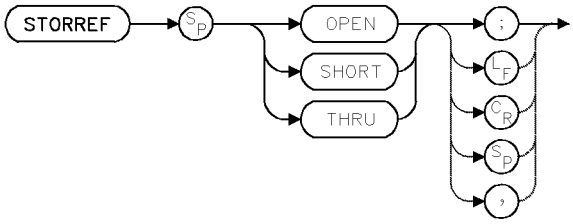


| Item | Description |
|---|---|
| Requirements | Execute `STORREF SHORT` after `STORREF OPEN` to store average of open and short references. |
| Restrictions | Inoperative after `AMB ON`, `APBPL ON`, or `AMC ON` are executed. |
| Interdependent Commands | CLRW |

## Example

Measure the 3 dB bandwidth of a device.

```
  10 ASSIGN @Sa TO 718

  20 CLEAR @Sa

  30 CALL Bw_meas(@Sa)
```
*Execute subprogram.*
```
  40 LOCAL 7

  50 END

  60 !
  70 Bw_meas:SUB Bw_meas(@Sa)
```
*Define the 3 dB bandwidth program:*
```
  80 OUTPUT @Sa;"FUNCDEF BW_MEAS,^";
```
*Define user-defined function.*
```
  90 OUTPUT @Sa;"IP;";
```
*Preset spectrum analyzer.*
```
  100 OUTPUT @Sa;"SNGLS;TS;";
```
*Activate single-sweep mode.*
```
  110 OUTPUT @Sa;VARDEF KEYA,0;";
```
*Define two variables, KEYA and KEYB.*
```
  120 OUTPUT @Sa;"VARDEF KEYB,0;"

  125 !
```
*Prepare the spectrum analyzer for stimulus-response*

*measurements:*

```
  130 OUTPUT @Sa;"MEASURE SR;";
```

*Activate stimulus-response*

*measurements.*

```
  140 OUTPUT @Sa;"SRCPWR ON;";
```

*Turn on tracking-generator source power.*

```
  150 OUTPUT @Sa;"CF 321.4MHZ;SP 50MHZ;";
```

*Set measurement range.*

```
  160 OUTPUT @Sa;"RB 1KHZ;TS;";
```

*Set resolution bandwidth and sweep.*

```
  165 !
```

*Instruct operator to measure and store through reference.*

```
  170 OUTPUT @Sa;"IT 0;OR 280,955;";
```

*Display text.*

```
  175 OUTPUT @Sa;"TEXT %Connect RF OUT to RF IN, then press CONT.%;";
```

*No device in path.*

```
  180 OUTPUT @Sa;"READMENU KEYA,1,%CONT%;";

  190 OUTPUT @Sa;"CLRDSP;";

  200 OUTPUT @Sa;"SRCTKPK;";

  210 OUTPUT @Sa;"TS;STORREF THRU;AMB ON;";

  215 !
```

*Instruct operator to insert device:*

```
  220 OUTPUT @Sa;"IT 0;OR 280,955;";

  230 OUTPUT @Sa;"TEXT %Insert device.  Press CONT%;";

  240 OUTPUT @Sa;"READMENU KEYB,1,%CONT%;";

  250 OUTPUT @Sa;"CLRDSP;";

  260 OUTPUT @Sa;"TS;";

  265 !
```

*Measure the 3 dB bandwidth:*

```
  270 OUTPUT @Sa;"MKOFF;";

  280 OUTPUT @Sa;"MKAL -3DB;MKAR -3DB;MKBW ON;";

  290 OUTPUT @Sa;"MKBW ON;";

  300 OUTPUT @Sa;"IT 0;OR 280,900;";

  310 OUTPUT @Sa;"TEXT %MEASUREMENT COMPLETE%; WAIT 1S;CLRDSP;";

  320 OUTPUT @Sa;"^;"
```

```
330 OUTPUT @Sa;"KEYDEF 14,BW_MEAS,%3DB BW MEAS%;"

340 SUBEND
```

The STORREF command is used for tracking-generator applications. The message "FUNCTION EXECUTED" is displayed after STORREF is successfully executed.

`STORREF OPEN` discontinues measurements with trace C (clear-write off), then transfers open-circuit amplitude information measured with trace A to trace C.

`STORREF SHORT` discontinues measurements with trace C, then averages trace A amplitude with trace C amplitude and stores these new trace values in trace C. The normalized data in trace C is the average of the short and open responses. `STORREF SHORT` should be executed *after* `STORREF OPEN`. Otherwise, the message "Not stored, Open 1st" is displayed and trace C is not changed.

`STORREF THRU` discontinues measurements with trace B, then transfers through-reference amplitude information measured with trace A to trace B.

`STORREF` displays "Not stored; A – X ▸ A on" and does not operate when the following functions are on:

- Trace A – Trace B (`AMB ON`)
- Trace A – Trace B + Display Line (`AMBPL ON`)
- Trace A – Trace C (`AMC ON`)

If `AMB` is executed after STORREF, measurements made with trace A are normalized (weighted) according to the contents of trace B. If `AMC` is executed after STORREF, trace A is normalized according to the contents of trace C.

# SUB

SUBTRACT

Subtract.

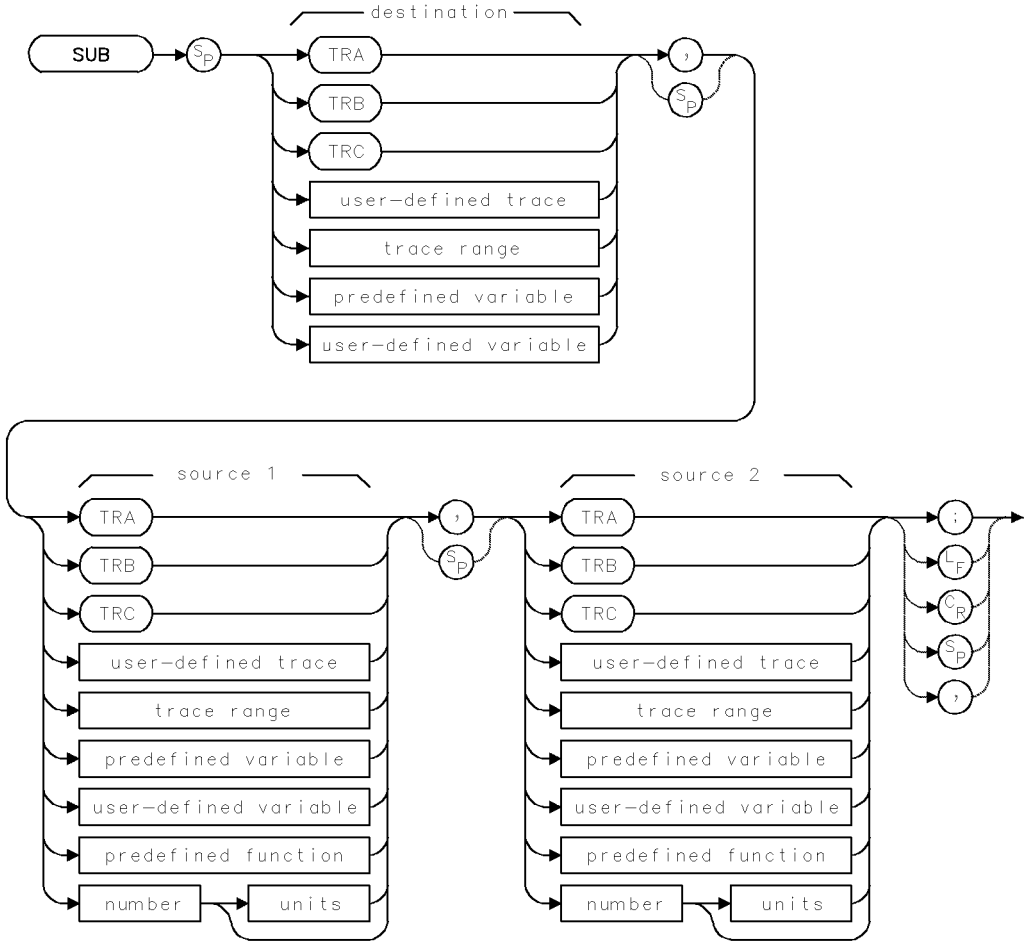

| Item | Description |
|---|---|
| Source-Amplitude Range | 0 – 10,000 measurement units for linear trace data in *TRA*, *TRB*, *TRC*, *trace range*, or *user-defined trace*. –32,768 – +32,767 measurement units for logarithmic trace data in *TRA*, *TRB*, *TRC*, *trace range*, or *user-defined trace*. $\pm$ $1.8 \times 10^{308}$ when using *number*, *predefined variable*, or *user-defined variable*. |
| Source-Length Range | 1 – 1024 position units. Default is 800 position units when using *TRA*, *TRB*, *TRC*. Truncated if longer than destination length. If shorter than destination length, last element is extended for operation. |
| Destination-Length Range | 1 – 1024 position units. |
| Requirements | Be sure data reflects one complete sweep when using *TRA*, *TRB*, *TRC*, or *trace range* for source. SNGLS and TS suggested. TRDEF required when using *user-defined trace*. VARDEF required when using *user-defined variable*. |

## Example

Use SUB to subtract values.

```
100 CLEAR 718                        Initialize spectrum analyzer.
110 OUTPUT 718;"IP;"
120 OUTPUT 718;"SNGLS;"              Activate single-sweep mode.
130 OUTPUT 718;"SUB CF,CF,1GHZ;"     Reduce center frequency by 1 GHz.
140 OUTPUT 718;"CF?;"                Return center frequency value to computer.
150 ENTER 718;N                      Sweep with new measurement range.
160 PRINT N
170 OUTPUT 718;"TS;"
```

The SUB command subtracts source 2 from source 1, point by point, then stores the value in the destination.

# SUM

SUM

Compute the sum of amplitude levels detected in each point of a trace.

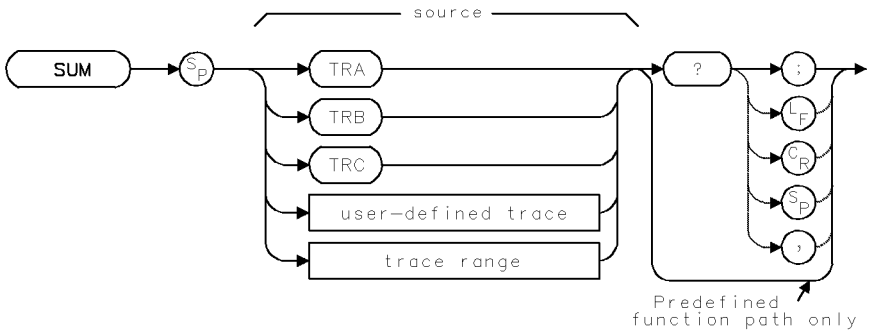


| Item | Description |
|---|---|
| Source-Amplitude Range | 0 – 10,000 measurement units for linear trace data. –32,768 – +32,767 measurement units for logarithmic trace data. |
| Source-Length Range | 1 – 1024 position units. Default is 800 position units when using *TRA*, *TRB*, *TRC*. |
| Requirements | Be sure data reflects one complete sweep when using *TRA*, *TRB*, *TRC*, or *trace range* for source. SNGLS and TS suggested. TRDEF required when using *user-defined trace*. |

## Example

Add the amplitudes of all points in trace A.

```
100 OUTPUT 718;"SNGLS;TS;"          Activate single-sweep mode. Sweep trace A.
110 OUTPUT 718;"SUM TRA?;"          Return sum to computer.
120 ENTER 718;N                     Assign value to computer variable.
130 DISP N;"MEASUREMENT UNITS"      Display value.
```

The SUM command returns the sum of the trace amplitudes in measurement units.

SUM must be used as either a query or as a source in another analyzer-command function. Form a query by ending the SUM statement with a question mark (?). When used as a query, SUM returns the sum of the trace amplitudes to the computer.

Use SUM as a source by incorporating the SUM statement into the source of any spectrum analyzer command having *predefined function* in its syntax diagram. When SUM is used as a source, the sum of the trace amplitudes is used for operation by the command that contains SUM.

See “Using Predefined Functions as Sources” under “Math Functions, Variables, and Trace Arrays” in the Programming Fundamentals chapter.

## Predefined-Function Syntax

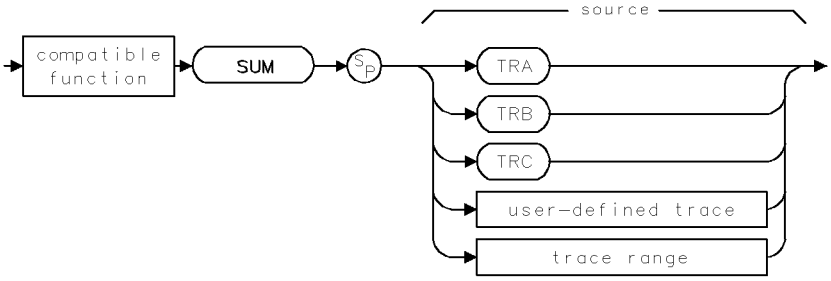


## Query Syntax

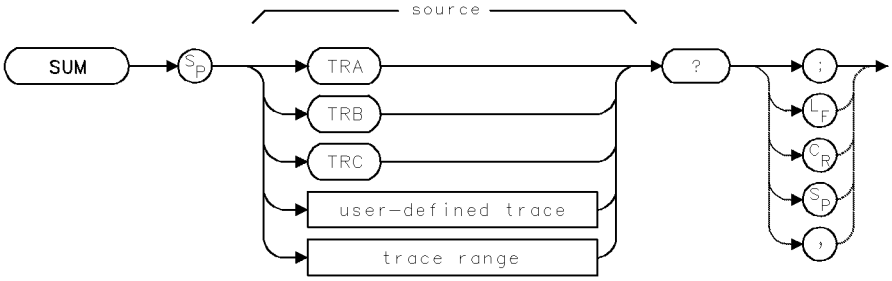


## Query Response

# SUMSQR

SUM OF SQUARES

Compute the sum of the square of the amplitude levels detected in each point of a trace.

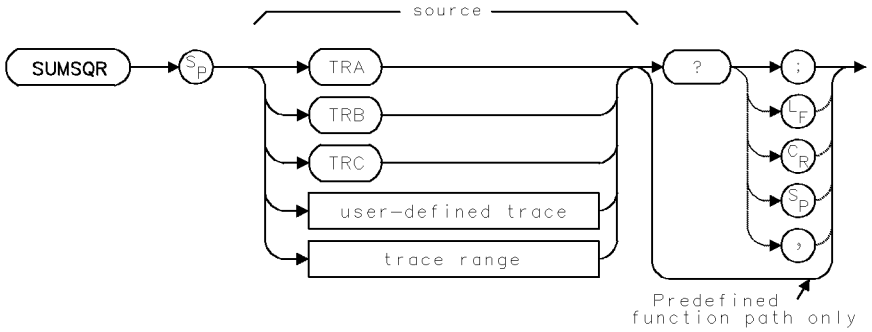


| Item | Description |
|---|---|
| Source-Amplitude Range | 0 – 10,000 measurement units for linear trace data. –32,768 – +32,767 measurement units for logarithmic trace data. |
| Source-Length Range | 1 – 1024 position units. Default is 800 position units when using *TRA*, *TRB*, *TRC*. |
| Requirements | Be sure data reflects one complete sweep when using *TRA*, *TRB*, *TRC*, or *trace range* for source. SNGLS and TS suggested. TRDEF required when using *user-defined trace*. |

## Example

Add the squares of the amplitudes of all elements in trace A.

```
100 OUTPUT 718;"SNGLS;TS;"          Activate single-sweep mode. Sweep trace A.
110 OUTPUT 718;"SUMSQR TRA?;"       Square the amplitude of all points in trace A, then
                                    return their sum.
120 ENTER 718;N                     Assign value to computer variable.
130 DISP N;"MEASUREMENT UNITS"      Display value.
```

The SUMSQR command returns the sum of the square of the trace-point amplitudes in measurement units.

SUMSQR must be used as either a query or as a source in another analyzer-command function. Form a query by ending the SUMSQR statement with a question mark (?). When used as a query, SUMSQR returns the sum of the square of the trace amplitudes to the computer.

Use SUMSQR as a source by incorporating the SUMSQR statement into the source of any spectrum analyzer command having *predefined function* in its syntax diagram. When SUMSQR is used as a source, the sum of the squares is used for operation by the command that contains SUMSQR.

See “Using Predefined Functions as Sources” under “Math Functions, Variables, and Trace Arrays” in the Programming Fundamentals chapter.

## Predefined-Function Syntax

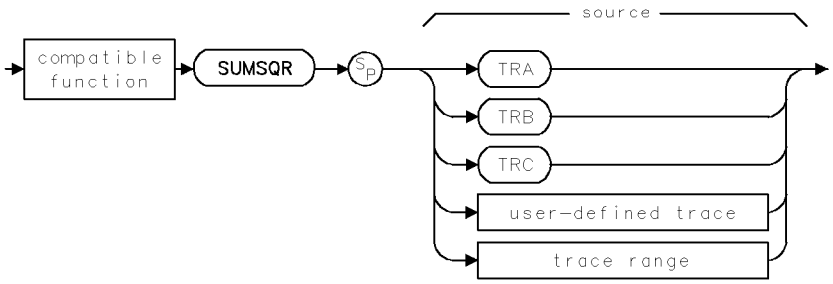


## Query Syntax

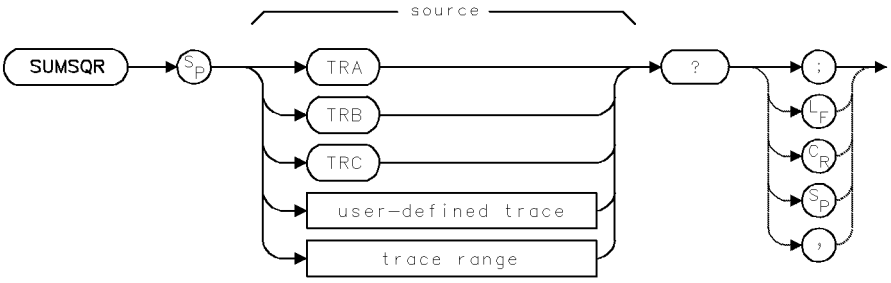


## Query Response

# SWPMODE

SWEEP MODE

Return the current sweep mode.

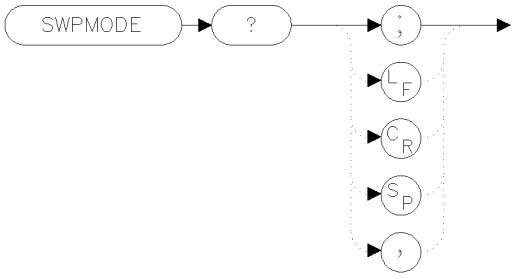


xswpde

## Example

```
100 OUTPUT 723;"SWPMODE?;"
```

The SWPMODE command returns the current sweep mode of the instrument. The returned string will be either SNGLS or CONTS, depending upon whether the instrument is in single sweep or continuous sweep respectively.

## Query Response

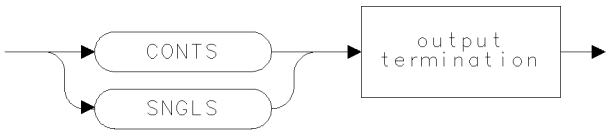


qswpde

## See Also

CONTS, SNGLS

# SYSCOR

SYSTEM AMPLITUDE CORRECTION

Enable or disable system specific amplitude corrections.

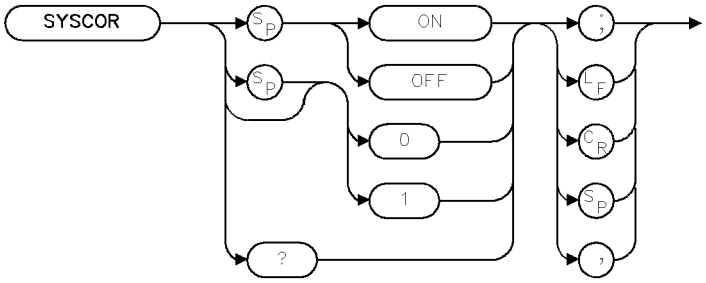


XSYSCO

| Item | Description |
|---|---|
| Preset State | ON |

## Example

```
10 OUTPUT 718;"SYSCOR ON;"
20 OUTPUT 718;"SYSCOR?;"
```

The SYSCOR command controls whether or not system-specific amplitude-correction information may be used. If SYSCOR is ON and the HP 70900B local oscillator source detects that the properly matched modules are in place, system-specific amplitude-correction information is used. If SYSCOR is OFF or the required matched modules are not present, module-specific amplitude-correction information is used instead.

## Query Response

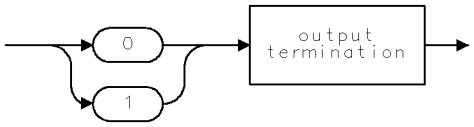


QGO1

# TDF

TRACE DATA FORMAT

Format trace data: binary, block, ASCII-decimal, **measurement units**, or **parameter units**.

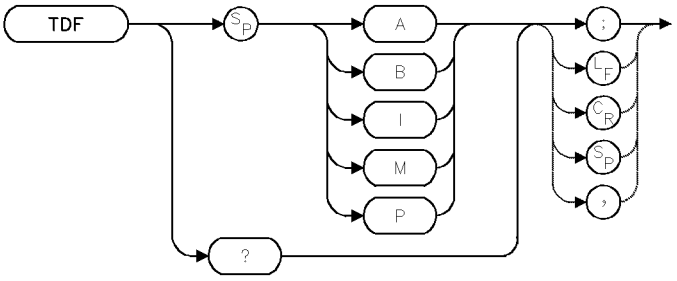


| Item | Description |
|---|---|
| Default Mode | P |
| Interdependent Commands | TRA, TRB, TRC, MDS |

## Example

Format trace data for transmission to a computer.

```
110 CLEAR 718;                                  Preset spectrum analyzer.
120 OUTPUT 718;"IP;"
130 OUTPUT 718;"VIEW TRA;TRA[50]?;"             Return value of 50th element of trace A.
140 ENTER 718;M                                 Assign value to computer variable.
150 DISP M                                      Print value.
160 OUTPUT 718;"TDF A;"                         When requested, send data as an absolute,
                                                block-data field. (Trace data is preceded by
                                                #A.)
170 OUTPUT 718;"TRA?;"                          Return trace-A amplitude information.
180 ENTER 718 USING "#,AA,W";Pound_a$,Number_of_bytes
                                                Format computer so that it receives data until
                                                the variable list is satisfied. "AA" expects two
                                                characters (#A) and W reads data as a word (two
                                                8-bit bytes).
190 ALLOCATE Data$[Number_of_bytes]             Define a computer array for storing the infor-
                                                mation. The length of the array is as long as
                                                the trace.
200 ENTER 718 USING "-K";Data$                  Store data in the computer array.
210 OUTPUT 718;"MOV TRA,0;"                     Store zeroes in trace A.
220 OUTPUT 718;"TRA #I";Data$                   Send data from computer back to spectrum
                                                analyzer as an indefinite, block-data field.
                                                The "I#" indicates that ASCII code 10 (line
                                                feed) marks the end of the transmission of
                                                data.
```

```
230 OUTPUT 718;"TDF P;TRA[50]?;"      Return trace data as decimal values in absolute units (dBm or volts). Return only the 50th element.
240 ENTER 718;N                       Assign data to variable.
250 DISP N                            Print value.
```

The TDF command formats trace information for return to the controller.

`TDF P` (parameter) returns data as ASCII-decimal values in absolute units (dBm or volts).

`TDF M` (measurement) returns data as ASCII-decimal values in **measurement units**.

`TDF A` returns data as an absolute block data field. The MDS command determines whether data comprises one or two 8-bit bytes.

`TDF I` returns data as an indefinite block data field. The MDS command determines whether data comprises one or two 8-bit bytes.

`TDF B` returns data as binary values in measurement units. The MDS command determines whether data comprises one or two 8-bit bytes.

The following tables summarize how the TDF command affects trace data transmission.

**Table 2-26. Trace Data Output Formats for Amplitude Information**

| Format Command | Spectrum Analyzer Output | Trace Element Output Amplitude of 10 dBm |
|---|---|---|
| TDF P | Returns ASCII decimal value. Values are in parameter units. Data output is followed by line feed (ASCII code 10) and end-or-identify (EOI) | +10.00 |
| TDF M | Returns ASCII integer value. Values are in measurement units. Line feed ( ASCII code 10) and EOI follow data output. | +1000 |
| TDF B | Returns binary value as two 8-bit bytes, with most significant byte first. Values are in measurement units. Sends EOI with last byte. | (3) (232) |
| TDF A | Sends series of 8-bit bytes (A-block data field). Data is preceded by "#" and "A" and 2 bytes that give the length of the data field. Data followed by line feed (ASCII code 10) and EOI. Values are in measurement units. | (#)(A) (0)(2) (3)(232) |
| TDF I | Sends a series of 8-bit bytes (I-block data field). Data is preceded by "#" and "I." Values are in measurement units. Sends EOI with last byte. | (#)(I) (3) (232) |

**Table 2-27.**
**HP-IB Transmission Sequence for Different Trace-Data Formats (TDF)**

| | TDF P | TDF M | TDF B | TDF A | TDF I |
|---|---|---|---|---|---|
| **Byte 1** | 1 | 1 | (3) | # | # |
| **Byte 2** | 0 | 0 | (232-EOI) | (A) | (I) |
| **Byte 3** | . | 0 | | (0) | (3) |
| **Byte 4** | 0 | 0 | | (2) | (232-EOI) |
| **Byte 5** | 0 | 10 (EOI) | | (3) | |
| **Byte 6** | 10(EOI) | | | (232) | |
| | | | | (10-EOI) | |

## Query Response

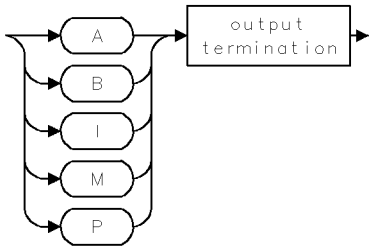

# TEST

SELF TEST

Execute self-test.

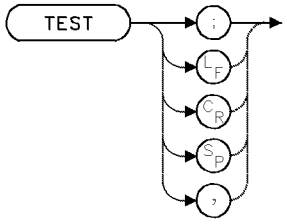


## Example

Use TEST to conduct the self test.

```
10 OUTPUT 718;"TEST;"    Conduct the self test.
```

The TEST command tests spectrum analyzer operation, then reports errors to the error register. The spectrum analyzer returns to its previous state when the test is complete.

Execute `ERR?` to return error codes to the controller. (`IP` and `ERR?` clear the error register where errors are recorded.)

The system-level command, device-clear, stops the test. The device-clear command in HP BASIC is `CLEAR 718` for spectrum analyzers at HP-IB address 18 on interface 7.

The test is described in the *HP 70000 Modular Spectrum Analyzer Installation and Verification Manual*.

# TEXT

TEXT

Write message anywhere on spectrum analyzer display.

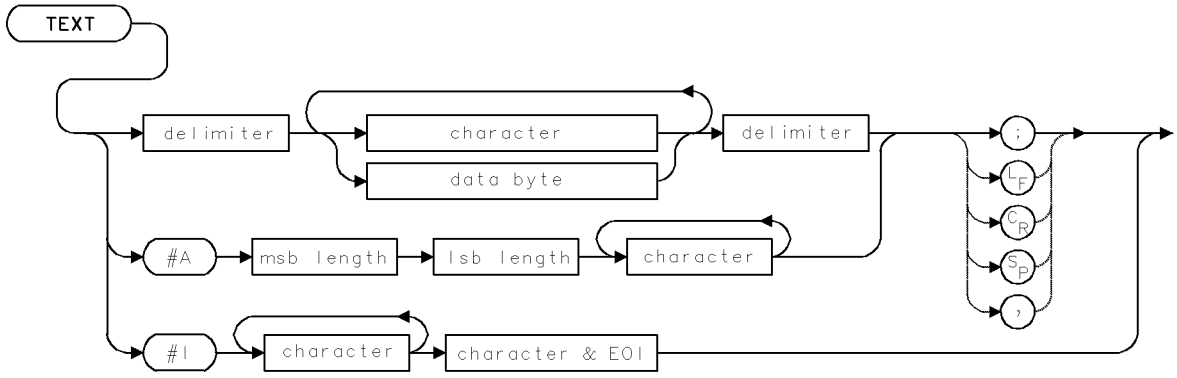


| Item | Description |
|---|---|
| Restrictions | Inoperative after DWINDOW ON |

## Example

Use the text command to write text anywhere on the spectrum analyzer display.

```
130 CLEAR 718                                          Initialize spectrum analyzer.
140 OUTPUT 718;"IP;"
150 OUTPUT 718;"CLRDSP;"                               Clear graphics from memory.
160 OUTPUT 718;"PU;PA 200,800;"                        In the up position, move
                                                       the pen to (200,800).
170 OUTPUT 718;"TEXT$";                                Write text. The "$" is a
                                                       delimiter which marks the
                                                       beginning and end of the
                                                       text.
180 OUTPUT 718;"Text can be ";
190 OUTPUT 718;"positioned on the ";
200 OUTPUT 718;CHR$(10);CHR$(13);                      The ASCII codes for car-
                                                       riage return and line feed
                                                       move the pen to the next
                                                       available line.
210 OUTPUT 718;"display with the ";
220 OUTPUT 718;"PA and PR ";
230 OUTPUT 718;CHR$(10);CHR$(13);
240 OUTPUT 718;"commands.$;"
250 OUTPUT 718;"IT 1;VW OFF;"                          Address item 1 and blank
                                                       it.
260 OUTPUT 718;"TEXT$Text can be put into items$;"     Assign text to item 1.
270 OUTPUT 718;"OR 400,600;VW ON;"                     Position the item at (400,600)
                                                       and display it.
```

**TEXT**

The TEXT command writes text on the spectrum analyzer display. Place identical delimiters at the beginning and end of the text you wish to display. (Refer to *delimiters* in Table 2-2 for list of delimiters.)

Text can be positioned two ways. First, PA or PR can position the text. Since TEXT automatically lowers the pen, PD (pen down) is not needed. After TEXT is executed, the pen position remains at the end of the last letter drawn, in the up position. The PA and PR commands should be used to position large paragraphs, such as help screens, that do not require modification at a later time.

Second, text can be positioned with the OR command during the reference-graphics mode. During this mode, text is assigned a nonzero item number with the IT command. Each item can contain up to 35 characters and up to 50 item numbers are available. Once assigned an item number, text can be modified at a later time or enhanced (blinking, inverse video, and so forth). (See IT.)

TEXT does not function when a **graphics window** is on. (See DWINDOW).

# TH

THRESHOLD

Blank display of trace data below an amplitude level.

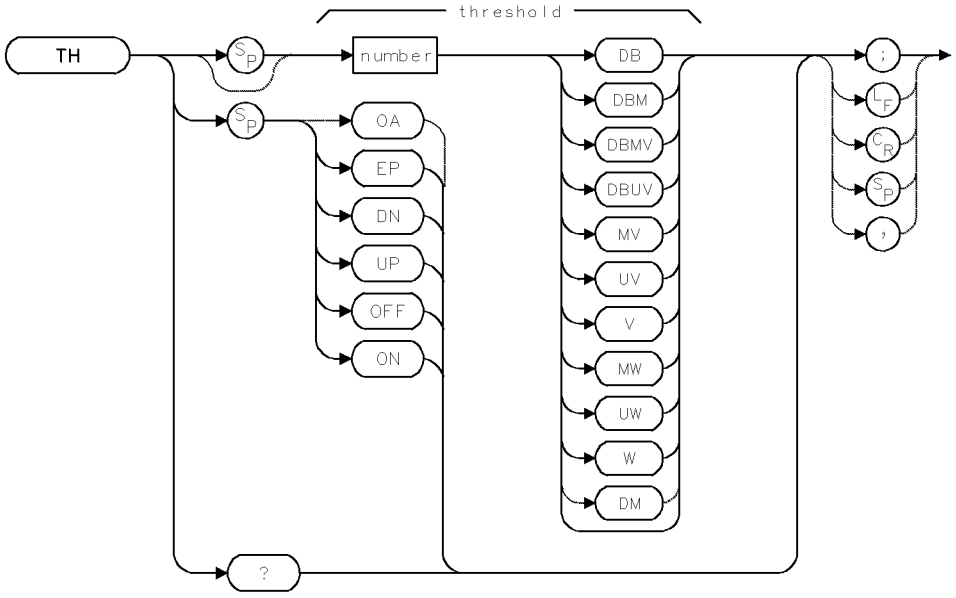


| Item | Description |
|---|---|
| Threshold Range | ± 300 dBm |
| Step Increment | 1 vertical scale division |
| Interdependent Commands | PDA, TRPST, AUNITS, RL, MEASURE, CNVLOSS, AMPCOR |
| Preset State | `TH -90DBM` (or one major division above the bottom graticule line) |

## Example

Blank responses below –70 dBm.

```
140 OUTPUT 718;"TH -70DBM;"
```

The TH command blanks signal responses below the specified threshold level (similar to "base-line clipper" operation). The responses below the threshold value are blanked when a value is entered with TH, or when `TH ON`, `TH UP`, or `TH DN` is executed. The TH command does not affect the amplitude information contained in the trace array.

## Query Response

# THREED

Turn on or off the three-dimensional trace display capability.

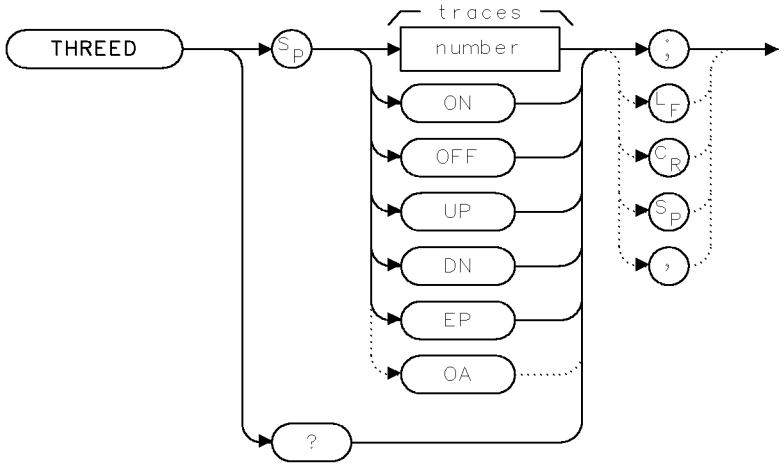


XTHRD

| Item | Description |
|---|---|
| Preset State | OFF |
| ON | Default is 16 traces |
| Range | ±1 to 50 traces |

## Example

```
10  OUTPUT 723;"THREED ON;"        Turn on three-dimensional capability.
20  OUTPUT 723;"THREED UP;"        Increase traces displayed by one increment.
30  OUTPUT 723;"THREED?;"          How many traces are creating the three-dimensional display.
40  ENTER 723;N
```

The THREED command sets the number of previous traces to be displayed simultaneously as a three-dimensional display function. The function is activated when you enter a value between 1 and ±50, or when you turn the function on. This value is retained if you turn the function off. It is not changed until you enter a different value.

## Query Response

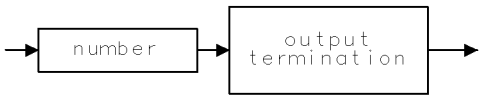


QTHRD

## See Also

THREEDV, THREEDH

# THREEDH

Select the horizontal offset of the three-dimensional trace display.

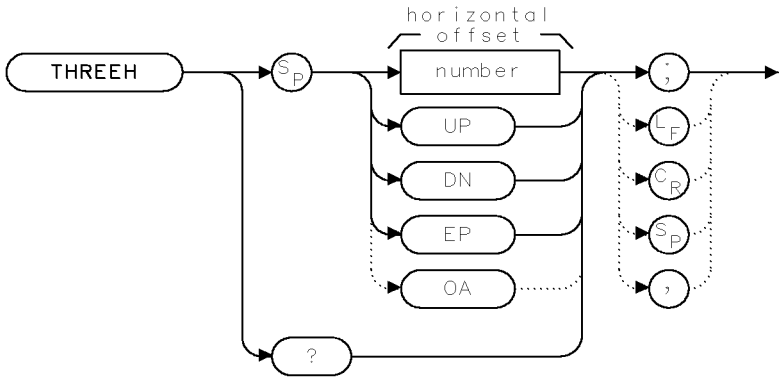


| Item | Description |
|---|---|
| Preset State | 4 positions, moving toward the right-hand side of the display |
| Range | 0 to ±200 positions |
| Step Increment | 1 position |

## Example

```
10 OUTPUT 723;"THREED ON;"          Turn on three-dimensional capability.
20 OUTPUT 723;"THREEDH -10;"        Rotate the three-dimensional display 10 positions left, from its current
                                    position.
30 OUTPUT 723;"THREEDH?;"           What is the current horizontal position of the three-dimensional traces
                                    displayed.
40 ENTER 723;N
```

The THREEDH command allows you to change the horizontal position of the traces, left or right, of a three-dimensional trace display. The function is activated with the THREED command, plus a value between 0 and ±200. The horizontal position of the traces is retained if you turn the function off with the THREED OFF command. It is not changed until you enter a new value.

## Query Response

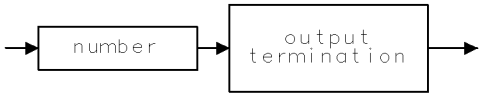


QTHRH

## See Also

THREED, THREEDV

# THREEDV

Select the vertical offset of the three-dimensional trace display.

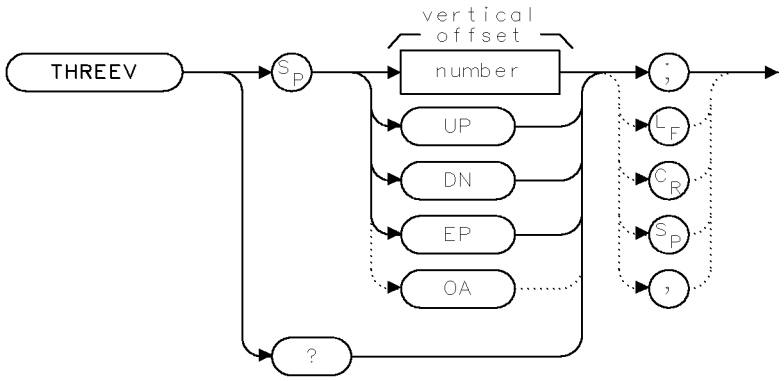


XTHRV

| Item | Description |
|---|---|
| Preset State | 10 positions moving toward the top of the display |
| Range | 0 to ±200 positions |
| Step Increment | 1 position |

## Example

```
10 OUTPUT 723;"THREED ON;"          Turn on three-dimensional capability.
20 OUTPUT 723;"THREEDV 20;"         Rotate the three-diminsional display positions up from its current
                                    position.
30 OUTPUT 723;"THREEDV?;"           What is the current vertical position of the three-dimensional display.
40 ENTER 723;N
```

The THREEDV command allows you to change the vertical position of the traces, up or down, from the current position of a three-dimensional trace display. The function is activated with the THREED command, plus a value between 0 and ±200 positions. The vertical position of the traces is retained if you turn the function off with the THREED OFF command. It is not changed until you enter a new value.

## Query Response

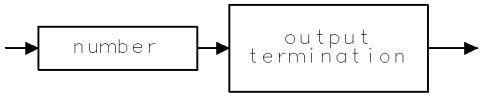


QTHRV

## See Also

THREED, THREEDH

# TIME

TIME STAMP

Monitor time.

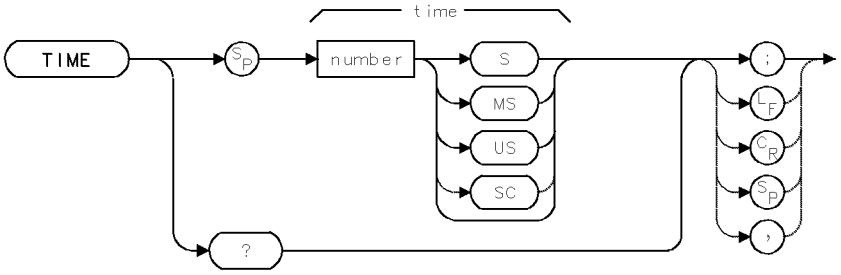


| Item | Description |
|---|---|
| Time Range | $\pm 10^{12}$ |
| Clock Accuracy | 1 $\mu$s |

## Example

Monitor the time it takes to run a program.

```
10 OUTPUT 718;"TIME 0S;"      Set clock to zero.
20 OUTPUT 718;"WAIT 3;"       Wait three seconds.
30 OUTPUT 718;"TIME?;"        Return elapsed time to controller.
40 ENTER 718;N                Assign value to controller variable.
```

The TIME command sets the clock that measures operating time. Clock precision is 1 $\mu$s. Execute `TIME?` to return the time lapsed since the clock was last set.

The clocked time is annotated beneath "TIME STAMP" in the active-function readout until `IP` or another spectrum analyzer command changes the active function readout. IP does not change the value of TIME.

Time can be used to record the time of an occurrence, especially if the display is monitored with a camera.

## Query Response

# TITLE

TITLE ENTRY

Write a title in the **title line**.

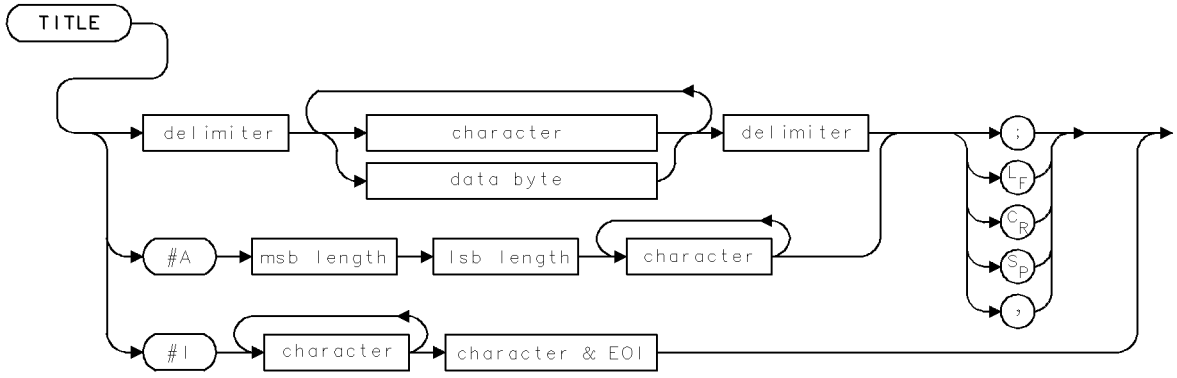


| Item | Description |
|---|---|
| Number of characters | 0 – 36 |
| Interdependent Commands | SAVES. IP erases title. |
| Preset State | Blank title |

## Example

Write inverse-video text in the title line.

```
130 OUTPUT 718;"CLRDSP;"                    Clear graphics from memory.
140 OUTPUT 718;"TITLE$Title your data$;"    Write text in the title line. The "$"
                                            delimits text.
150 OUTPUT 718;"WAIT 2S;"                   Wait 2 seconds.
160 OUTPUT 718;"TITLE$";                    Write text. Semicolon required to sup-
                                            press line feed.
170 OUTPUT 718;CHR$(27);"&dB";              Turn on inverse-video display of text.
180 OUTPUT 718;"^Your title^";
190 OUTPUT 718;CHR$(27);"&d@";              Turn off inverse video.
200 OUTPUT 718;"$;"                         End of second title.
```

The TITLE command displays text in the title line located in the upper portion of the graticule. The TITLE command automatically places the pen down before text is written and raises it after text is written.

Place identical delimiters at the beginning and end of the text you wish to display. The maximum number of text characters allowed is 36. (See *delimiters* in Table 2-2 for a list.)

Standard escape sequences may be used to produce enhancements such as blinking, inverse video, and underlining. (See example.)

CLRDSP does not affect the contents of the title line. The SAVES command stores the contents of the title line in a state register. See TEXT and SAVES.

# TM

TRIGGER MODE

Determine what triggers the sweep.

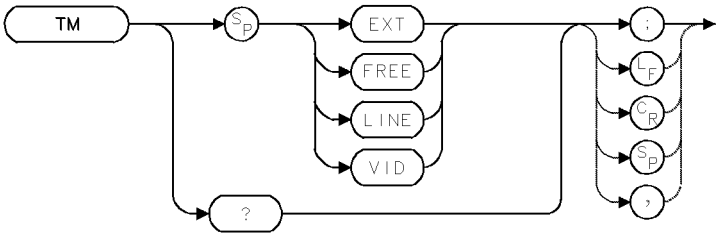


| Item | Description |
|---|---|
| Interdependent Commands | VTH, VTL, DONE, CONTS, SNGLS, VAVG |
| Preset State | TM FREE |

## Example

Configure the spectrum analyzer to trigger on an external trigger signal.

```
10 OUTPUT 718;"TM EXT;"
```

The TM command selects the trigger mode that determines how the sweep is triggered.

TM FREE (free run) uses the internal circuitry of the spectrum analyzer so that the trigger conditions are satisfied.

TM VID (video) triggers the sweep with the amplitude level of the detected, video signal.

TM LINE (line) triggers the sweep with the line voltage.

TM EXT (external) triggers the sweep with an external trigger connected to the external-trigger input port.

## Query Response

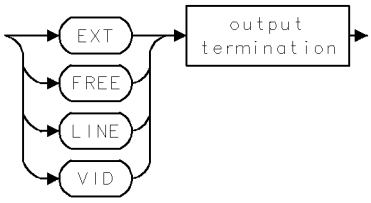

# TP

POINTER

Modify shape of stored, graphics **item**.

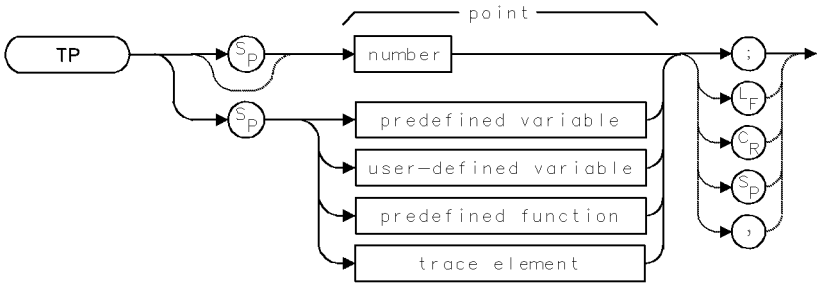


| Item | Description |
|---|---|
| Point Range | 0 – 65,535 |
| Requirements | Precede and follow IT with the PA command. |
| Preset State | TP 0 |

## Example

Modify the shape of an item (referenced graphics).

```
140 CLEAR 718                 Initialize spectrum analyzer.
150 OUTPUT 718;"IP;"
160 OUTPUT 718;"CLRDSP;"      Clear graphics from memory.
170 OUTPUT 718;"DWINDOW 200,200,0,27,0,30;"   Define new coordinate system that
                                              fits inside a square with sides 200
                                              units long, in the current units for
                                              SCALE (0 to 1000 for both X and Y).
                                              Define new coordinate system: X1
                                              axis is from 0 to 27; Y1 axis from
                                              0 to 30.
180 OUTPUT 718;"IT 1;VW OFF;"          Address item 1 and blank it.
190 OUTPUT 718;"PA 10,0,17,8,";        Define item 1 with eleven coordinate pairs,
                                       numbered 0 through 10. The coordinates are
                                       specified in the new coordinate system (X1 and
                                       Y1).
200 OUTPUT 718;"25,4,21,13,27,20,";
210 OUTPUT 718;"18,19,12,30,";
220 OUTPUT 718;"11,18,0,16,";
230 OUTPUT 718;"11,11,10,0;"
240 !
250 OUTPUT 718;"OR 500,600;VW ON;"     Position item at (500,600) and turn it on.
260 OUTPUT 718;"WAIT 2S;"              Wait 2 seconds.
270 OUTPUT 718;"TP 4;"                 Address the fourth point (27,20).
280 OUTPUT 718;"PA 40,30;"             Change it from (27,20) to (40,30).
```

The TP command works in conjunction with the item and plot commands, IT and PA, to modify the shape of referenced graphics called **item**s. (See IT.) The TP command acts as a pointer that selects a point on an item for modification. For example, the triangle below is a graphics item defined by points, numbered 0 through 3.

| #0 | #1 | #2 | #3 |
|---|---|---|---|
| (600,0) | (700,200) | (800,0) | (600,0) |

Executing `TP 1` selects point (700,200) for modification. Follow `TP 1` with a PA command to specify the new point coordinates.

# TRA/TRB/TRC

TRACE DATA INPUT AND OUTPUT

Return or store trace data.

## Syntax to Store or Query Array

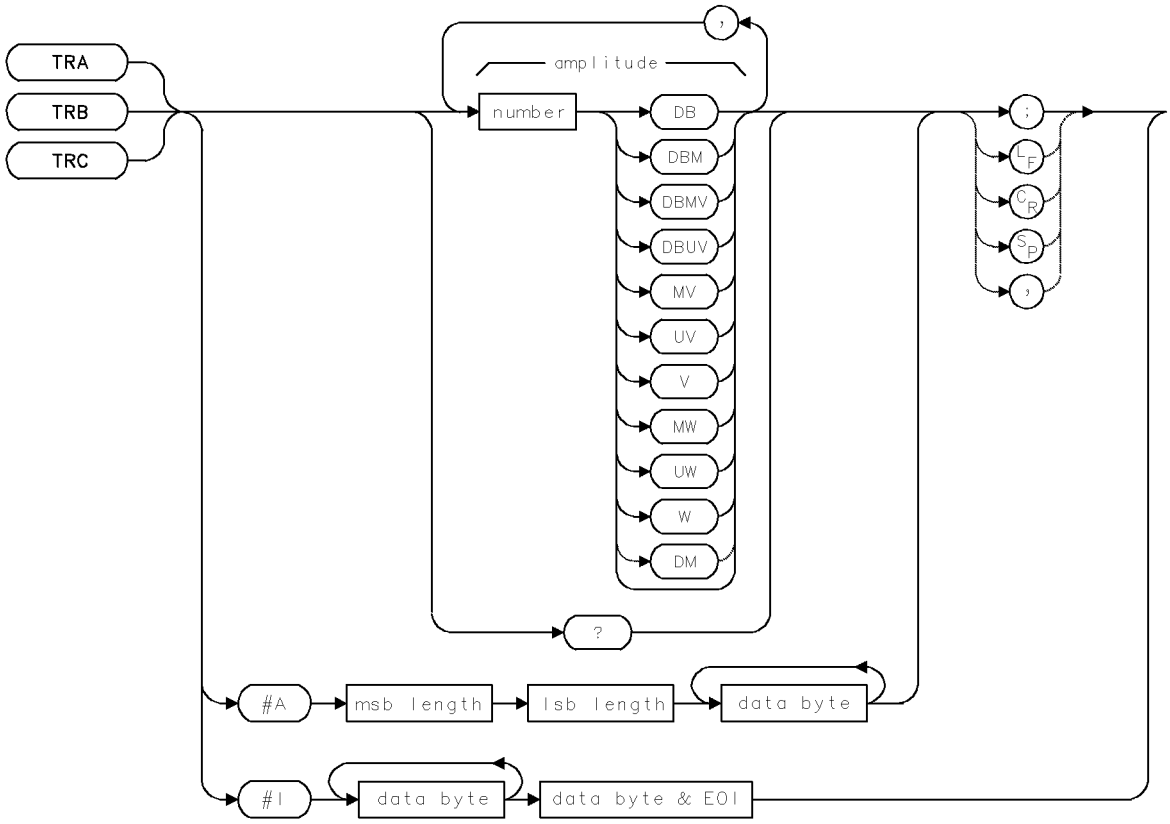


## Syntax to Store or Query One Element

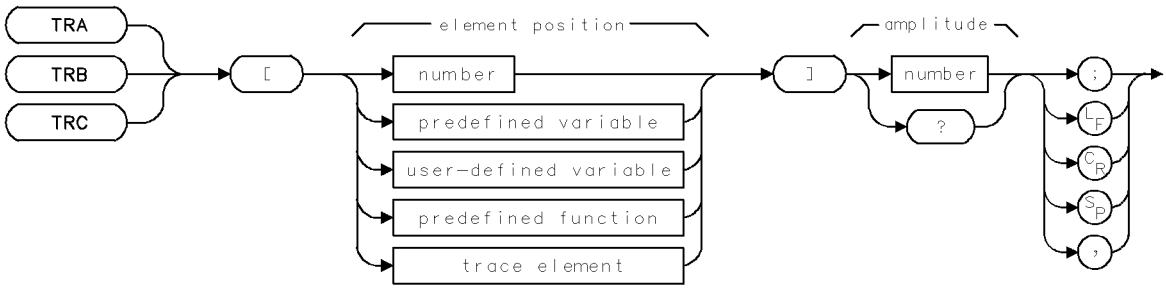

| Item | Description |
|---|---|
| Amplitude Range | 0 – 10,000 measurement units for linear trace data. –32,768 – +32,767 measurement units for logarithmic trace data. |
| Length Range | 3 – 1024 position units. Default is 800 position units when using TRA, TRB, TRC. |
| Interdependent Commands | MDS, TDF, and commands that affect frequency or amplitude range. |

## Example

Use TRA to store data in a trace.

```
10 CLEAR 718                    Initialize spectrum analyzer.
20 OUTPUT 718;"IP;"
30 OUTPUT 718;"CLRDSP;"         Clear graphics from memory.
40 OUTPUT 718;"AUNITS?;"        Return current amplitude units.
50 ENTER 718;N$                 Assign units to computer variable.
60 PRINT N$                     Print current units on computer display.
70 OUTPUT 718;"BLANK TRA;"      Blank trace A.
80 OUTPUT 718;"SP 1MHZ;"        Set span.
90 OUTPUT 718;"TRDEF TRC,3;"    Define trace C as a three-element trace.

100 OUTPUT 718;"TRC -10DBM,-20DBM,-15DBM;"   Store amplitude values in trace C.
110 OUTPUT 718;"VIEW TRC;"                   View trace C.
```

## Example

Transmit trace data to the computer.

```
140 OUTPUT 718;"TDF A;"         When requested, send data as an absolute, block-data
                                field. (Trace data is preceded by #A.)
150 OUTPUT 718;"TS;"            Sweep trace A.
160 OUTPUT 718;"VIEW TRA;"      Stop sweeping trace A and store measurement results.
170 OUTPUT 718;"TRA?;"          Return trace-A amplitude information.

180 ENTER 718 USING "#,AA,W";Pound_a$,Number_of_bytes
```

*Format computer to receive data until the variable list is satisfied. "AA" expects two characters (#A) and W reads data as a word (two 8-bit bytes).*

```
190 ALLOCATE Data$[Number_of_bytes]
```

*Define a computer array for storing the trace information. The length of the computer array is as long as the trace.*

```
200 ENTER 718 USING "-K";Data$      Store data in the computer array.
210 OUTPUT 718;"MOV TRA,0;"         Store zeroes in trace A.
220 OUTPUT 718;"TRA#I";Data$        Send data from computer back to spectrum ana-
                                    lyzer as an indefinite block data field. The "#I"
                                    indicates that ASCII code 13 (line feed) marks the
                                    end of the transmission of data.
230 OUTPUT 718;"TDF P;TRA[50]?;"    Return trace data as decimal values in absolute
                                    units (dBm or volts). Return only the fiftieth
                                    element.
240 ENTER 718;N                     Assign data to variable.
250 DISP N                          Print value.
```

The TRA, TRB, and TRC commands send or receive trace-amplitude information for trace A, B, or C. Trace A is described below. Traces B and C operate the same way.

To store an amplitude value in one or more points of a trace, follow TRA by amplitude values for each point. Values are stored starting with the first point. (See example.)

When *number* (see syntax diagram) is used to store trace data (for example `TRA -20 DBM,-21DBM`), the units for stored data can be specified as shown in the syntax diagram (for example dB, dBm.), provided that the trace data format is in its preset mode, `TDF P`. If `TDF B`, `TDF A`, `TDF I`, or `TDF M` has been executed, numbers are stored in **measurement units.** If relative-amplitude mode is active during tracking-generator applications, stored data is in dB.

When #A or #I (block data fields) store trace data, the units for the stored data are **measurement units**, and are interpreted as bytes or words, as specified by the MDS command. When TRA is used to store block data in a trace, TRA overrides any format selection made with the TDF command.

To return the value of a single trace element, follow TRA by the trace element position, in position units, and a question mark. The value returned is in parameter units, unless the trace-data-format command, TDF, specifies measurement units. The amplitude-units command, AUNITS, can also specify the type of parameter units returned.

See "Math and Move Commands" under "Math Functions, Variables, and Trace Arrays" in the Programming Fundamentals chapter. See also MDS, TDF, and AUNITS.

## Query Response for Data in ASCII Format (TDF P or TDF M)

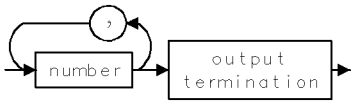


## Query Response for Data in Absolute, Block-Data Format (TDF A)

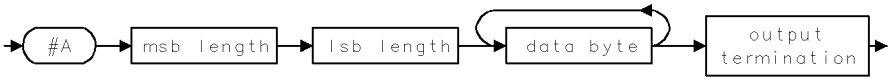


## Query Response for Data in Indefinite, Block-Data Format (TDF I)

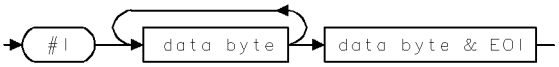


## Query Response for Data in Binary Format (TDF B)

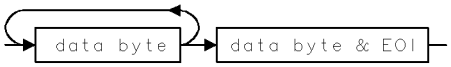

# TRCOND

TRACE CONDITIONS

Scale trace data displayed in a **graphics window**.

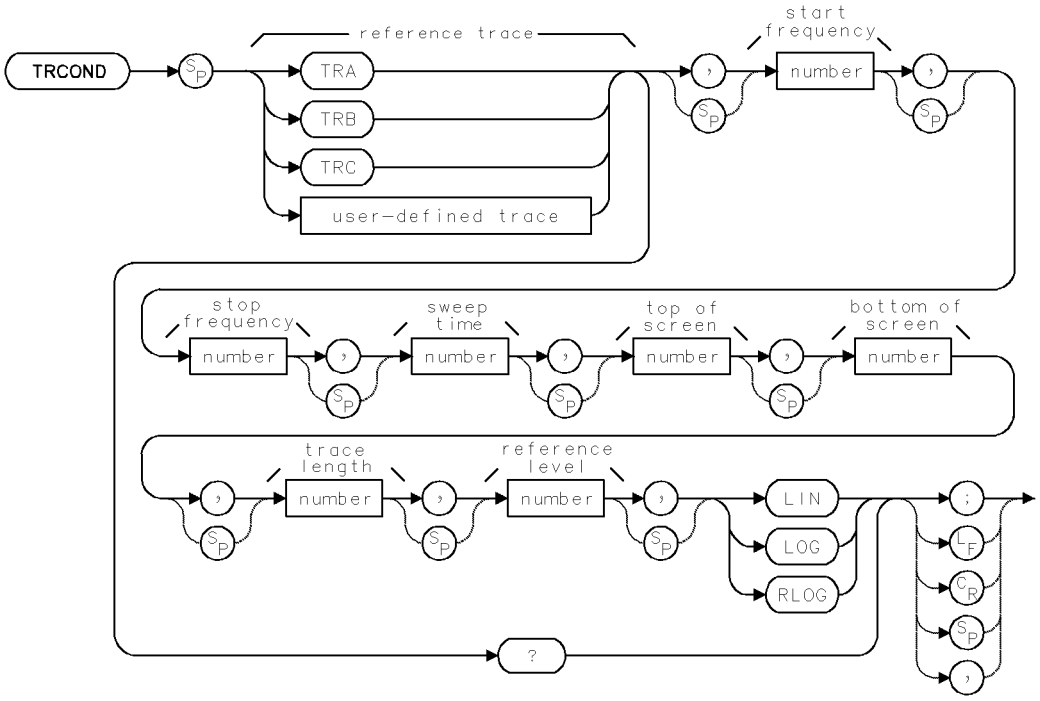


| Item | Description |
|---|---|
| Start-Frequency Range | ± 1000 GHz or hardware limit. |
| Stop-Frequency Range | ± 1000 GHz or hardware limit. |
| Sweep-Time Range | 0 – 1000 seconds or hardware limit. |
| Top-of-Screen Range | −32,768 – +32,767 |
| Bottom-of-Screen Range | −32,768 – +32,767 |
| Trace-Length Range | 3 – 1024 |
| Reference-Level Range | ± 300 dBm or hardware limit. |
| Reference-Trace-Length Range | 3 – 1024 position units. Default is 800 position units when using *TRA*, *TRB*, *TRC*. |
| Reference-Trace Amplitude Range | 0 – 10,000 measurement units for linear trace data. −32,768 – +32,767 measurement units for logarithmic trace data. |
| Requirements | Be sure data reflects one complete sweep when using *TRA*, *TRB*, *TRC*, or *trace range* for source. SNGLS and TS suggested. TRDEF required when using *user-defined trace*. |
| Interdependent Commands | DWINDOW, GRAPH |

## Example

Return trace conditions to computer.

```
140 ALLOCATE Disp_mode$[3]                    Allocate string variable in com-
                                              puter for storing conditions.
150 OUTPUT 718;"TRCOND TRA?;"                 Return trace conditions to computer.
160 ENTER 718 USING "#,K";Start,Stop,Sweep    Return data.
170 ENTER 718 USING "#,K";Top,Bottom,Data
180 ENTER 718 USING "#,K";Reference,Disp_mode$
190 DISP Bottom;"MEASUREMENT UNITS"           Display minimum trace value.
```

The TRCOND command formats the spectrum analyzer settings so that measurement results stored in trace arrays are properly displayed in a **graphics window** defined by the DWINDOW command.

Set the *top-of-screen* parameter, in measurement units, equal to the maximum amplitude you want to display.

Set the *bottom-of-screen* parameter, in measurement units, equal to the lowest value you want to display.

Set the *trace-length* parameter equal to the number of elements in the trace.

Set the *reference-level* parameter, in dBm, equal to the reference level active when trace data was stored.

Set the *start-* and *stop-frequency* parameters, in Hz, equal to the start and stop frequencies that were active when the trace was stored (swept).

Set the *sweep-time* parameter, in seconds, equal to the sweep time that was active when the trace was stored (swept).

Command arguments LIN, LOG, and RLOG determine how data is interpreted. LIN interprets data in an absolute, linear scale. LOG interprets data in an absolute, logarithmic scale. RLOG interprets data in a relative, logarithmic scale.

## Query Response

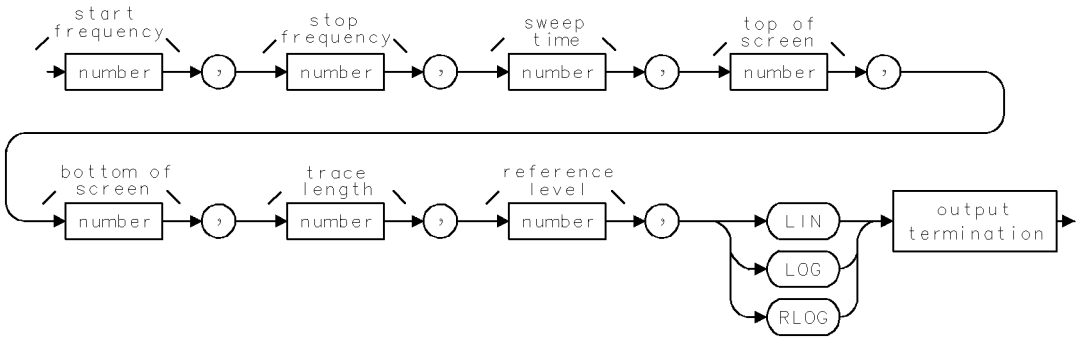

# TRDEF

TRACE DEFINE

Change trace length or create **user-defined traces**.

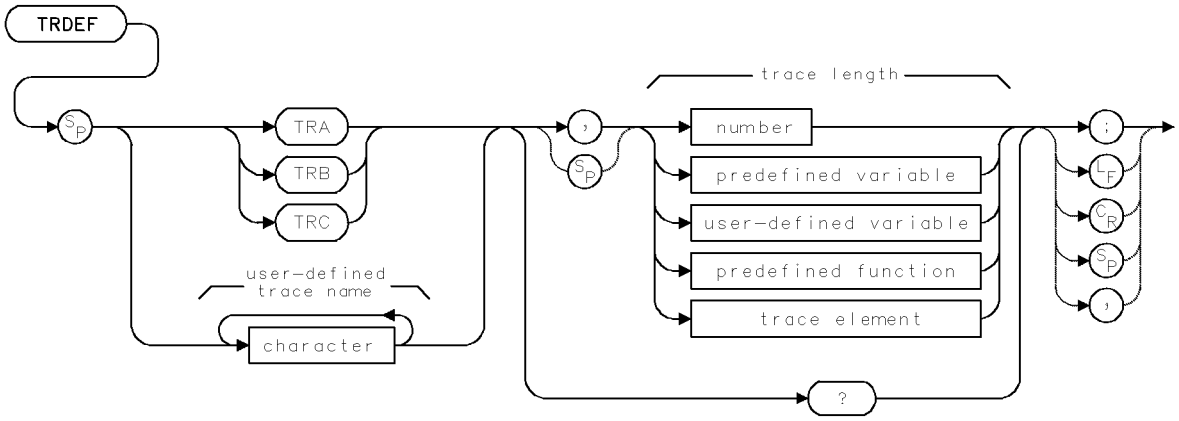


| Item | Description |
|---|---|
| Trace-Name Range | 1 – 12 characters: A – Z, 0 – 9, and underscore (_). First character must be a letter. Numbers must be preceded by underscore. |
| Length Range | 3 to 1024 |
| Requirements | Requires internal memory. |
| Interdependent Commands | PROTECT, DISPOSE, FORMAT, LOAD, RCLD, PURGE |
| Preset State | `TRDEF TRA,800; TRDEF TRB,800; TRDEF TRC,800` |

## Example

Change the length of trace A.

```
110 OUTPUT 718;"TRDEF TRA,400;"   Change the length of trace A to 400 elements.
```

## Example

Return the length of a user-defined trace.

```
10 OUTPUT 718;"TRDEF MLB,3;"      Define user-defined trace that is 3 points long.
20 OUTPUT 718;"TRDEF MLB,?;"      Return length of user-defined trace to computer.
30 ENTER 718;N                    Assign value (3) to computer variable.
```

## Example

Return contents of user-defined trace to computer.

```
10 OUTPUT 718;"CF 300MHZ;SP .01MHZ;"   Set measurement range.
20 OUTPUT 718;"TRDEF MLB,3;"           Define user-defined trace that is 3 points
                                       long.
30 OUTPUT 718;"TS;MOV MLB,TRA;"        Store contents of TRA in MLB.
40 OUTPUT 718;"MLB?;"                  Return contents of MLB to computer.
50 ENTER 718;A,B,C                     Assign each trace element to a computer
                                       variable.
```

The TRDEF command changes the length of traces A, B, or C, or creates new trace arrays, called **user-defined traces**, for data storage or manipulation. After a user-defined trace is created, it can be used wherever *user-defined trace* appears in the syntax diagrams.

Memory is reserved to contain up to 1024 elements of trace information (from 1 to 1024) for each of the predefined traces A, B, and C. This memory is always protected and is separate from **internal memory** where user-defined traces, variables, functions, and so forth, are stored. TRDEF stores user-defined traces in internal memory provided there is sufficient room. Use DISPOSE or PURGE to delete user-defined traces from internal memory.

If traces A, B, and C have different lengths, the active trace with the shortest length is used for the specified span. The shorter trace accepts data until filled.

See TRA, DISPOSE, FORMAT and ERASE. See also "Math Functions, Variables, and Trace Arrays" in the Programming Fundamentals chapter.

## Query Syntax to Return Trace Contents

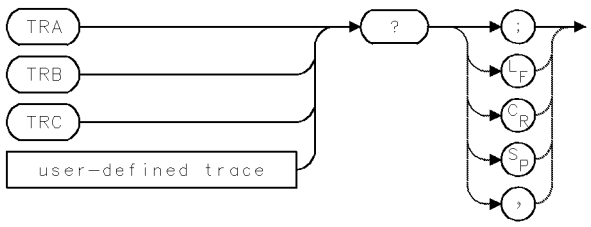


## Query Response for Trace Contents

(See TRA for more syntax. See also TDF for trace-data format information.)

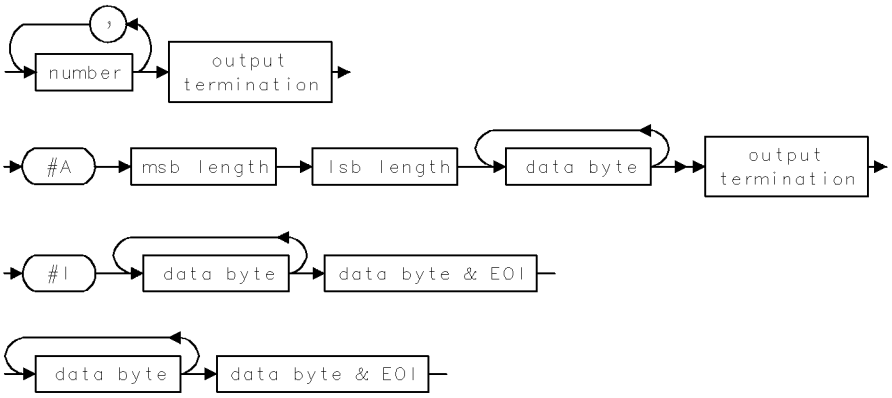


## Query Syntax to Return Trace Length

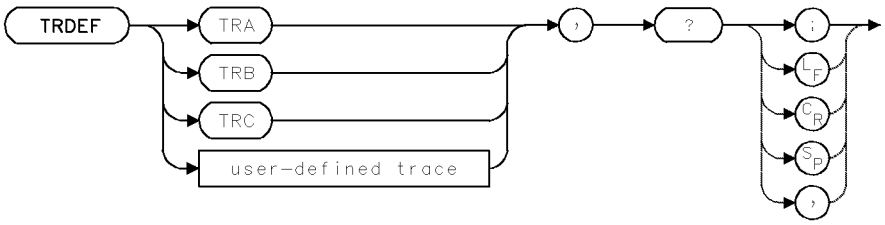


## Query Response for Trace Length

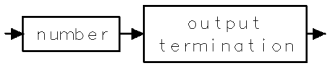

# TRDSP

TRACE DISPLAY

Blank display of active trace(s) while measuring.

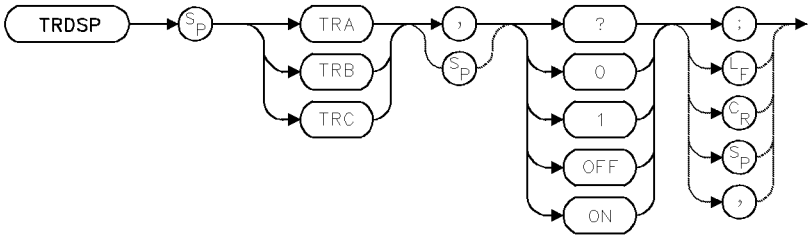


| Item | Description |
|---|---|
| Interdependent Commands | TRPST, TRSTAT |
| Preset State | TRDSP TRA,ON; TRDSP TRB,OFF; TRDSP TRC,OFF |

## Example

Use TRDSP to turn off a trace without changing the measurement information stored in it.

```
10 CLEAR 718                          Initialize spectrum analyzer.
20 OUTPUT 718;"IP;"
30 OUTPUT 718;"CF 300MHZ;SP 1MHZ;"    Set measurement range.
40 OUTPUT 718;"TS;"                   Sweep trace A.
50 OUTPUT 718;"TRDSP TRA,0;"          Turn off display of trace A.
60 OUTPUT 718;"TRDSP TRA,ON;"         Display trace A.
70 OUTPUT 718;"TRDSP TRA,?;"          Return display-status of trace A.
80 ENTER 718;N                        Assign status to computer variable.
```

The TRDSP command turns off trace A, B, or C without clearing the trace data or interrupting measurements. Thus, data continues to be stored in the active trace.

`TRDSP OFF` reduces the time duration between sweeps.

## Query Response

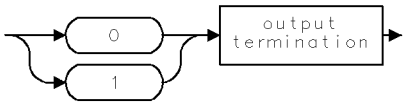

# TRIGDEL

TRIGGER DELAY

Control the trigger delay or pre-trigger for the currently selected ADC.

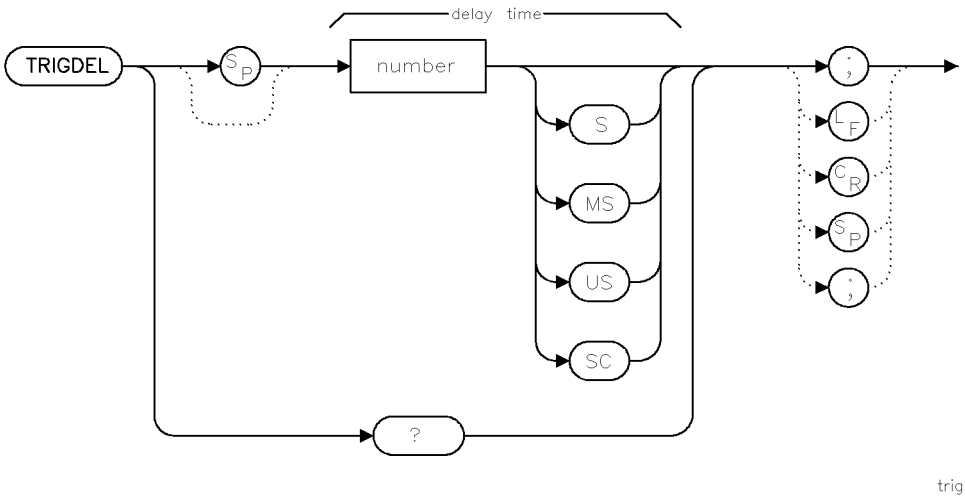


| Item | Description |
|---|---|
| Range | A range as specified for each ADC. For the HP 70900B local oscillator source internal ADC, the range is from 0 to 52428 uS with a resolution of 1 uS. |
| Preset State | 0 |

## Example

```
TRIGDEL 1.1MS;  Set the trigger delay to 1.1 mS.
TRIGDEL?        Report the current trigger delay (default:0).
```

It is sometimes desired to have a delay between the occurance of a trigger (particularly an external trigger) and the taking of a sweep. This is particularly true when the desired sweep time is much less than the desired delay. Without trigger delay, trace resolution must be sacrificed to allow both the trigger and the desired data to be captured.

With TRIGDEL, one can select a delay between the trigger and the taking of a sweep. For the HP 70900B local oscillator source internal ADC, this delay is in addition to the normal internal trigger latency. For the HP 70700A digitizer ADC, this is a true trigger delay. The delay works for any trigger type.

If the trigger delay is not zero, an annunciator "T" (Tau) appears on the screen to indicate this. The annunciator is just to the right of the "ROFFSET" annunciator location.

For the HP 70900B local oscillator source, TRIGDEL specifies additional delay. Depending upon the measurement setup, the internal latency may be significant (but steady for that measurement setup).

**TRIGDEL**

For the HP 70700A digitizer, the error “ADC trig delay range” will be given if the specified trigger delay value is outside of the supported range. This error may occur even if TRIGDEL is not what was changed.

For the HP 70700A digitizer, the range is from -CT*N to CT*(1048574-N) with a precision of CT (CT = time per bucket, N = number of buckets in the first band). If the normal (Rosenfell) detector is selected, the maximum delay is half of the above maximum (the minimum is the same).

## Query Response

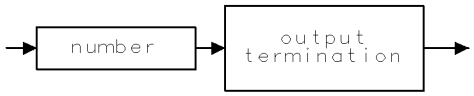


qgennum

# TRPST

TRACE PRESET

Preset active trace conditions.

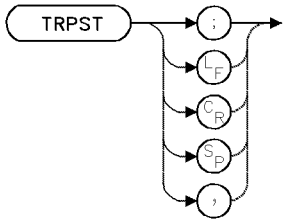


| Item | Description |
|---|---|
| Interdependent Commands | CLRW, BLANK, DET, AMB, VIEW, AMBPL, VAVG, TRDEF, TRDSP, TRSTAT |

## Example

Use TRPST to reset the traces to a defined state without affecting the measurement parameters.

```
110 OUTPUT 718;"TRPST;"     Reset the traces to a defined state.
```

The TRPST command executes the following commands to preset trace functions:

- Clear-write trace A. (CLRW TRA)
- Blank trace B. (BLANK TRB)
- Blank trace C. (BLANK TRC)
- Set normal detection mode. (DET AUTO)
- Turn off trace-A-minus-trace-B. (AMB OFF)
- Turn off trace-A-minus-trace-B-plus-display-line. (AMBPL OFF)
- Turn off video averaging. (VAVG OFF)
- Set trace A length to 800 elements. (TRDEF TRA,800)
- Set trace B length to 800 elements. (TRDEF TRB,800)
- Set trace C length to 800 elements. (TRDEF TRC, 800)
- Display trace A. (TRDSP TRA,ON;TRDSP TRB,OFF;TRDSP TRC,OFF)

# TRSTAT

TRACE STATUS

Return status of active trace.

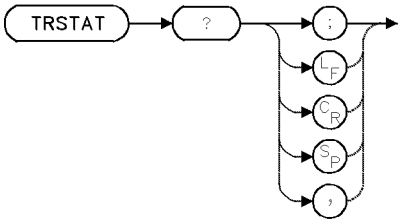


| Item | Description |
|---|---|
| Interdependent Commands | CLRW, DET, VIEW, BLANK, TRDSP, TRPST |

## Example

Return the measurement state of traces A, B, and C.

```
10 ALLOCATE Status$[40]            Define computer array for storing characters.
20 OUTPUT 718;"TRSTAT?;"           Return trace states.
30 ENTER 718 USING "-K";States$    Store response in States$, including line feeds.
```

TRSTAT returns the status of traces A, B, and C: clear-write, blank, view, or off.

## Query Response

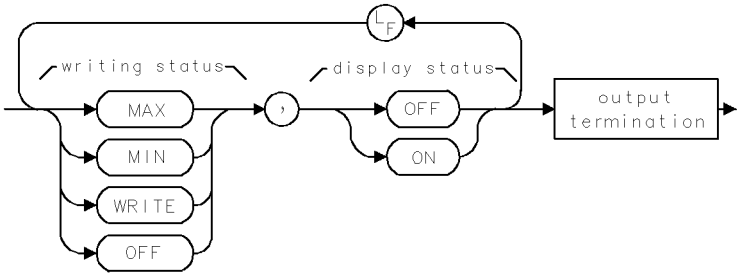


Trace A is described first, followed by trace B and trace C. *Writing status* describes how the trace data is updated with each sweep.

- MAX is returned when trace data is updated using positive-peak detection. (See DET.)
- MIN is returned when trace data is updated using negative-peak detection. (See DET.)
- WRITE is returned when the trace is updated with normal detection. (See DET.)
- OFF is returned when the trace is not updated with each sweep. (See VIEW or BLANK.)

*Display status* tells whether the trace is displayed on the display.

- ON is returned when the trace is displayed (See TRDSP).
- OFF is returned when the trace is not displayed (See TRDSP).

# TS

TAKE SWEEP

Measure.

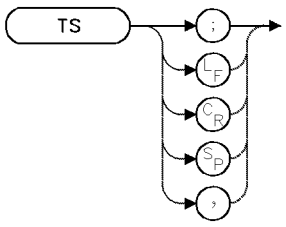


| Item | Description |
|---|---|
| Interdependent Commands | TM, VTL, VAVG, VTH, SNGLS, CONTS, DONE |

## Example

Use TS to be sure that trace information reflects current measurement range settings.

```
10 OUTPUT 718;"CF 200MHZ;TS;"
```

## Example

Use TS to control amplitude information in the traces before processing them with math commands.

```
10 OUTPUT 718;"SNGLS;TS;VIEW TRA;SUB TRC,TRA,1000;VIEW TRC;"
```

## Example

Use TS to position markers accurately on active traces.

```
10 OUTPUT 718;"MKN;TS;MKMIN;"
```

The TS command sweeps the current measurement range and stores new amplitude information in the active trace(s). Each sweep begins when the trigger conditions are met. The take-sweep command is used to synchronize a measurement with the sequence of commands sent to the instrument. When a command sequence is preceded by TS, the user is assured a complete sweep of measurement information has been taken and the end-of-sweep bit in the **status-byte register** has been set before further commands are processed.

Since there is an input buffer for commands sent via HP-IB, multiple commands may be stored in the buffer, but they are not executed until the sweep is completed.

To synchronize computer operation with the completion of a measurement, follow TS with a `DONE?`. See the FETCH command.

Whenever the measurement range is changed, sweep to ensure that the new parameters are reflected in the trace data. (Refer to the example for “TS”.)

Whenever trace information is manipulated with math commands, sweep the entire trace once in single-sweep mode to ensure that the stored trace contains information for one complete sweep. (Refer to the example for “TS”.)

Whenever marking traces with the marker commands, sweep the trace before executing them so that they are positioned correctly. (Refer to the example for "TS".)

# TWNDOW

TRACE WINDOW

Store a weighting algorithm (Hanning, Hamming, flat top, uniform) for use with the fast Fourier transform function.

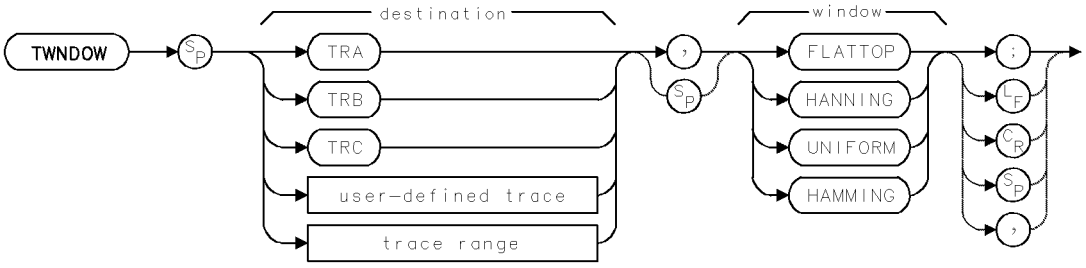


| Item | Description |
|---|---|
| Destination-Amplitude Range | 0 – 10,000 measurement units for linear trace data. −32,768 – +32,767 measurement units for logarithmic trace data. |
| Destination-Length Range | 3 – 1024 position units. |
| Requirements | Be sure data reflects one complete sweep when using *TRA*, *TRB*, *TRC*, or *trace range* for source. SNGLS and TS suggested. TRDEF required when using *user-defined trace*. |
| Interdependent Commands | FFT |

## Example

Use a predefined window algorithm to weight a trace, then perform a Fourier-series transform.

(Connect calibrator signal to spectrum analyzer.)

```
150 CLEAR 718                          Initialize spectrum analyzer.
160 OUTPUT 718;"IP;"
170 OUTPUT 718;"CF 300MHZ;"            Set measurement range.
180 OUTPUT 718;"SP 0;ST 50MS;"
190 OUTPUT 718;"TWNDOW TRC,FLATTOP;"   Store flat-top-window algorithm in trace C.

200 OUTPUT 718;"CLRW TRB;BLANK TRA;"   Measure with trace B. Blank trace A.
210 OUTPUT 718;"SNGLS;TS;"             Sweep once.
220 OUTPUT 718;"FFT TRA,TRB,TRC;"      Perform fast-Fourier transform on trace B
                                       and store the results in trace A.
230 OUTPUT 718;"BLANK TRB;VIEW TRA;"   Blank trace B. Store and view trace A.
240 OUTPUT 718;"MKN;"                  Place a marker on trace A. Notice that the
                                       marker position is described in units of
                                       frequency instead of time.
```

The TWNDOW function formats a trace array with real values for use with the fast Fourier transform function (FFT). Execute TWNDOW on a trace that has the same length as the trace you wish to transform with FFT.

The window function weights the contents of a trace array according to four algorithms, called **trace window**s: uniform, Hanning, Hamming, or flat-top. Three of the filters are shown below as graphs in the time domain. The TWNDOW command multiplies a trace array with one of

these windows. If the predefined windows do not meet your measurement needs, use the TRA, TRB, TRC commands to build your own window function.

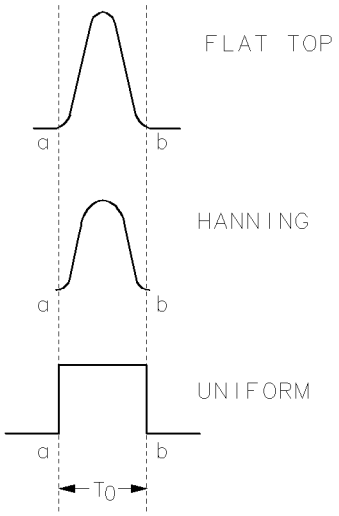


**Figure 2-8. Hanning, Flat top, and Uniform Trace Window Shapes**

The predefined windows simulate passband shapes that represent a give-and-take between amplitude uncertainty, sensitivity, and frequency resolution. They also minimize side effects caused by the non-continuous, finite nature of the discrete Fourier transform. One side effect is the appearance of aliasing. This is handled by rapid sampling and signal filtering. Another side effect is spurious responses caused by sampling the measurement range for a finite period. This is minimized by weighting the sampled data, but this reduces the resolution of real signals. The compromise of how much to reduce side lobes at the expense of resolution is the purpose of the window choices.

The uniform-window algorithm has the least frequency uncertainty and greatest amplitude uncertainty. Worst-case accuracy uncertainty is −3.9 dB and its 3 dB resolution bandwidth is 60% of the Hanning bandwidth. The uniform window does not contain time-domain weighting. Thus, the amplitude data is unchanged. Use the uniform window when transforming noise signals or transients that decay within one sweep-time period. The uniform window also yields the best frequency resolution, but also produces the highest side lobes for periodic signals.

The Hanning window is a traditional passband window found in most real-time spectrum analyzers. The Hanning window offers a compromise between the flat-top and uniform windows. Its amplitude uncertainty is −1.5 dB and its 3 dB bandwidth is 40% of the flat-top bandwidth. Use the Hanning window when transforming periodic or random data.

The flat-top window has the greatest frequency uncertainty of the windows, but it has outstanding side-lobe suppression and amplitude flatness. Use the flat-top window to transform periodic signals.

The Hamming window has a bandwidth somewhere between the Hanning and flat-top windows, with more uniform side-lobe suppression than the Hanning window, but less suppression than either Hanning or flat-top for signals farther out of the passbands.

See FFT for more information about these algorithms and the fast Fourier transform function.

# USERERR

USER ERROR REPORT

Return an error message of your design.

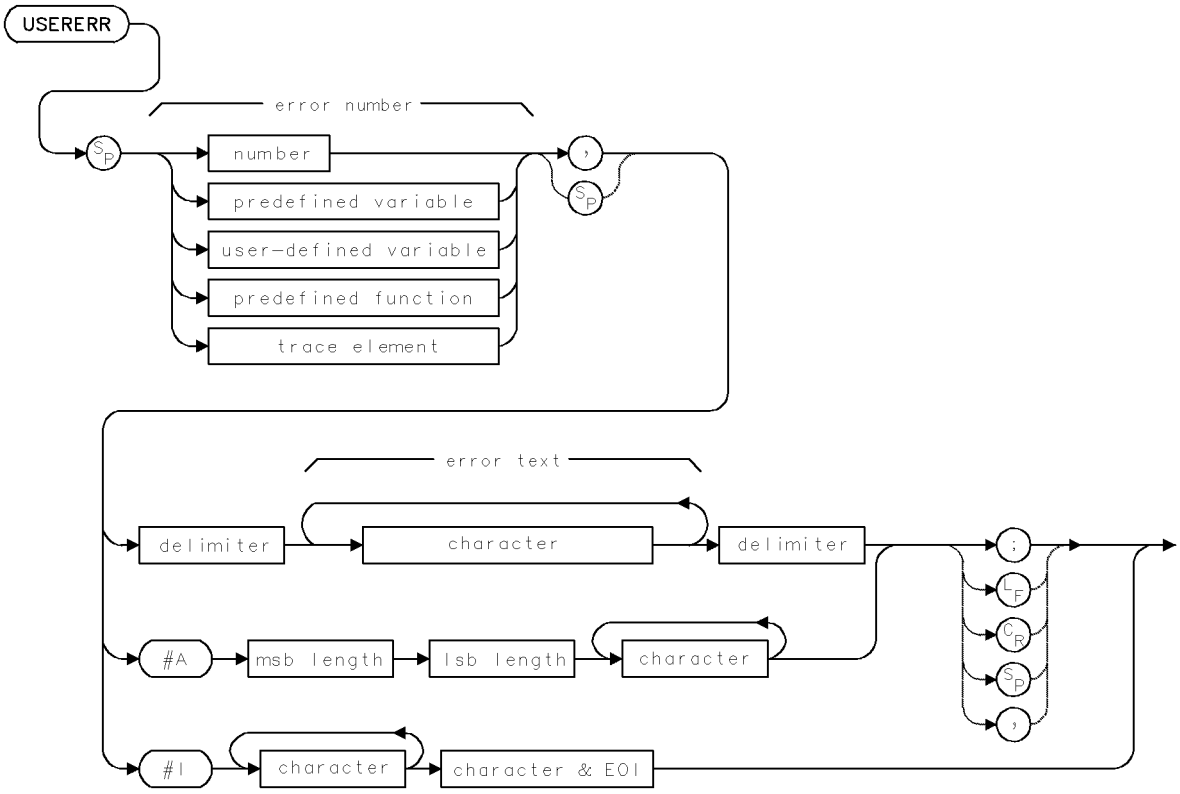


| Item | Description |
|---|---|
| Error-Number Range | 1 – 9999 |
| Error-Text Range | 0 – 20 characters |
| Requirements | Requires internal memory, depending on MSI selection. See Appendix D for commands that consume memory. |
| Interdependent Commands | MSD |

## Example

Use USERERR to create your own error messages and error conditions.

```
130 ALLOCATE Error$[200]
140 OUTPUT 718;"CF EP;"                 Set center frequency.
150 OUTPUT 718;"USERERR,1234,@MAG@;"    Report error 1234.
160 OUTPUT 718;"WAIT 2S;"               Wait 2 seconds.
170 OUTPUT 718;"XERR?;"                 Return error report to computer.
180 ENTER 718 USING "-K";Error$         Assign errors to string array.
190 PRINT Error$                        Print errors.
```

## USERERR

The USERERR command displays an error message of your own creation and assigns the error a number. The error is reported through the error reporting mechanism.

# USERKEY

USER-DEFINED KEYS

Return or receive data that configures (USER) keys.

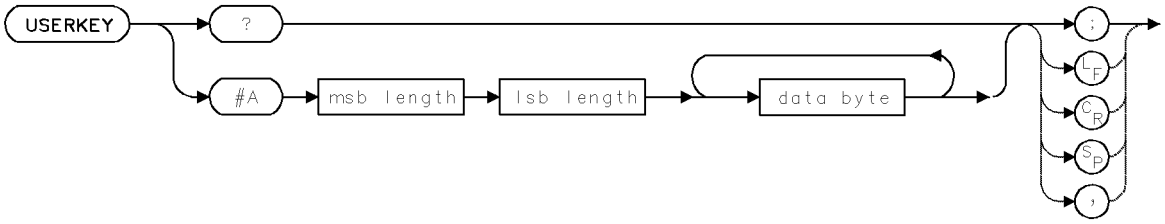


## Example

Transmit the (USER) key menu to and from the computer.

```
200 OUTPUT 718;"USERKEY?;"          Return key menu to computer.
210 ALLOCATE Userkeys$[350]         Define string variable for storing keys. Up to
                                    350 characters can be stored.
220 ENTER 718 USING "-K";Userkeys$  Assign key names to string variable, called
                                    Userkeys$. "-K" accepts ASCII characters which
                                    might otherwise be interpreted as terminators.
230 OUTPUT 718;"KEYPST;"            Set the (USER) menu to its preset state.
240 P=POS(Userkeys$,"USERKEY")      Set variable P to the position of the "USERKEY"
                                    in the string variable, Userkeys$.
250 OUTPUT 718;Userkeys$[P];        Send contents of Userkeys$ to spectrum ana-
                                    lyzer, starting at character P.
260 DEALLOCATE Userkeys$
```

The USERKEY command transmits the key labels accessed with the front panel (USER) key. Any labels that are associated with custom keypad keys will also be transmitted. Refer to the KEYDEF command for an explanation of defining custom keypad keys.

USERKEY? returns the key labels to the controller.

The block-data field syntax (#A) reloads the key labels. The label names are sent as an absolute, block-data field.

## Query Response

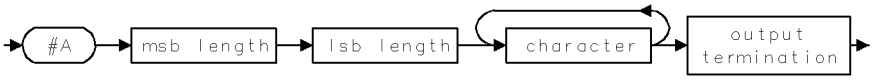

# USERLOCK

USER-KEY LOCK

Limit front panel operation to the (USER) keys.

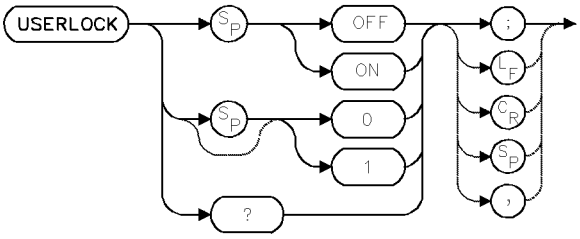


## Example

Prevent access to the (MENU) keys, then reinstate access.

```
10 OUTPUT 718;"USERLOCK ON;"
20 PAUSE
30 OUTPUT 718;"USERLOCK OFF;"
```

*Observe that (MENU) keys cannot be accessed when (MENU) is pressed.*

*Press CONTINUE on computer keyboard.*

*Make (MENU) keys operational.*

The USERLOCK command limits front panel operation to keys accessed with the (USER) key, making the (INSTR PRESET) or (I-P) key, and keys accessed with the (MENU) key, inoperative.

Use `USERLOCK ON` to guarantee that a system operator can not stop or override the functions provided in the (USER) menu.

`USERLOCK OFF` restores operation of the (MENU) keys and the (INSTR PRESET) or (I-P) key.

## Query Response

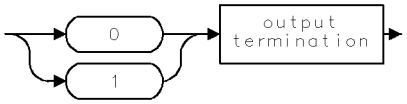

# USERMSG

USER MESSAGE

Write a message on the spectrum analyzer display that is cleared at your descretion.

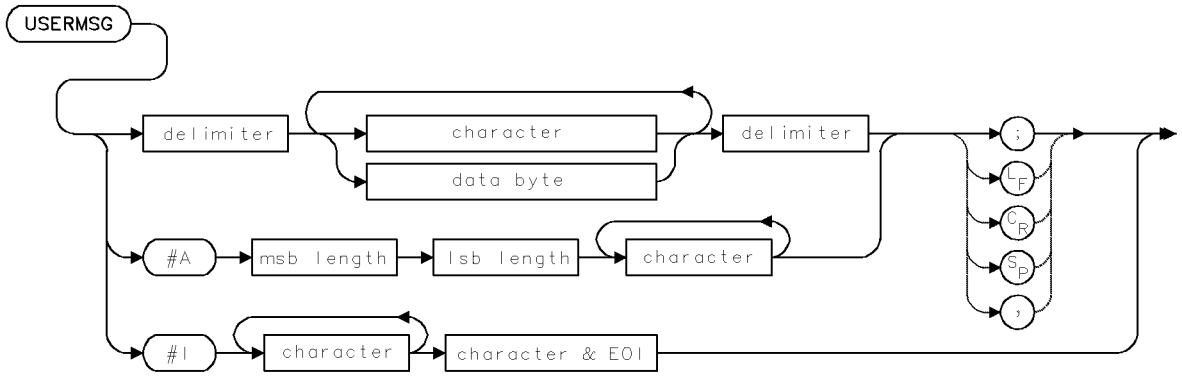


| Item | Description |
|---|---|
| Requirements | Requires internal memory. See Appendix D for commands that consume memory. |
| Interdependent Commands | MSG |

## Example

Write a message in the message area.

```
10 OUTPUT 718;"USERMSG @Set center frequency to 300MHz.@;"
```

The USERMSG command writes a message of 39 characters or less in the message area on the display. The message is cleared by pressing any key, or executing `IP` or `MSG?`.

# USERWARN

USER WARNING

Display a user defined warning message.

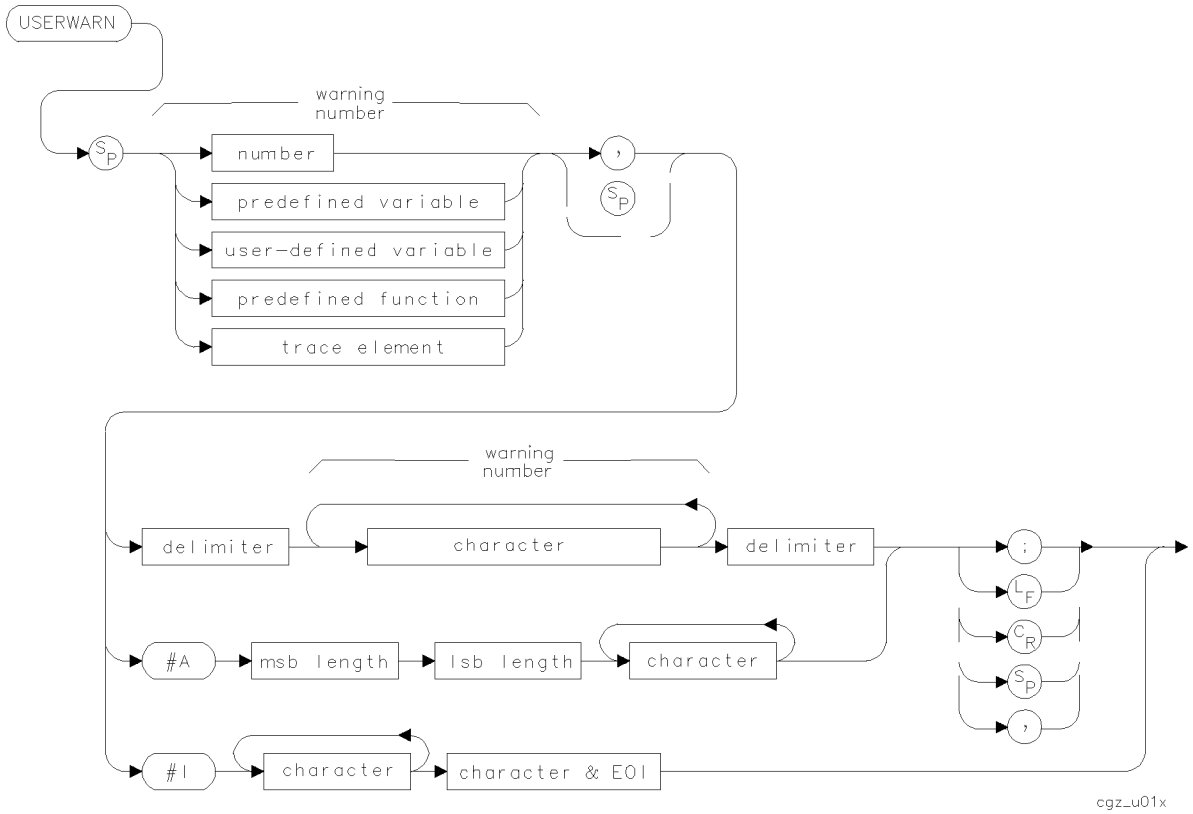


| Item | Description |
|---|---|
| Warning-Number Range | 10001—19999 |
| Warning-Text Range | 0—20 characters |

## Example

```
100 OUTPUT 723;";"
100 OUTPUT 723;"USERWARN 17000, ^Connect the input signal!^;"
```

The USERWARN command allows you to write your own warning message on the display. Use warnings to indicate that the user might not be performing a task properly. Warnings are displayed in a 2 line by 22 character area that is centered at the bottom of the graticule area. The actual warning text is displayed in inverse video using the ADVISE color; this is the same color that is used for the UNCAL indicator.

When creating a user message, do not use the numbers 10000, or 16001 through 16012; these are reserved warning message numbers.

The warning message removed from the display after one of the following events occurs:

- 6 seconds elapse from the time the message is displayed.
- Another warning message is displayed.

- A display key is pressed.
- An WARN or XWARN command is used to read the warning.
- An ERR or XERR command is used to read an error message.

Bit 1 of the status byte is used to report the presence of a warning. Refer to STB and related commands for other information concerning the status byte.

The WARNCTRL command can be used to prevent the display of warnings. An instrument preset (IP command) enables warnings. If display of the active function area is disabled, the warning area will be suppressed; however, the warning can still be accessed via WARN? and XWARN.

## See Also

STB, USERERR, WARN?, WARNCTRL, XWARN

# USRPWR

USER POWER

Offset absolute value of power bar and trace amplitudes.

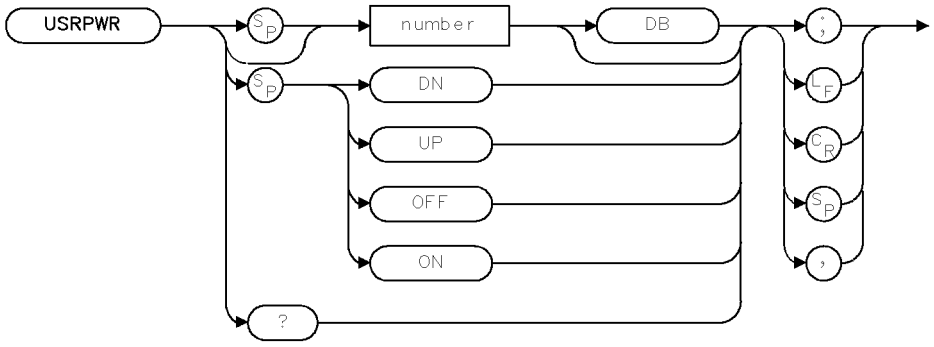


XUSRPW

| Item | Description |
|---|---|
| Requirements | Requires a power meter in the signal path. |
| Preset State | OFF |
| Interdependent Commands | AUNITS, ROFFSET |

## Example

```
10 OUTPUT 718;"USRPWR -0.6;"
20 OUTPUT 718;"USRPWR OFF;"
30 OUTPUT 718;"USRPWR?;"
```

The USRPWR command adjusts the absolute value of the power bar and trace amplitude values to the specified input value. The query returns the current USRPWR setting.

The USRPWR and ROFFSET commands are two different ways in which to perform an amplitude correction. ROFFSET uses a delta value and USRPWR uses an absolute value. For example, if the current power bar value is −0.7, a USRPWR value of −0.6 is the same as an ROFFSET of 0.1.

## Query Response

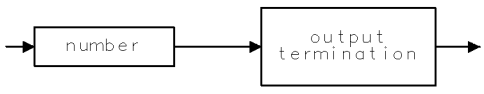


QNUM

# USTATE

USER STATE

Return or receive data that configures **internal memory**.

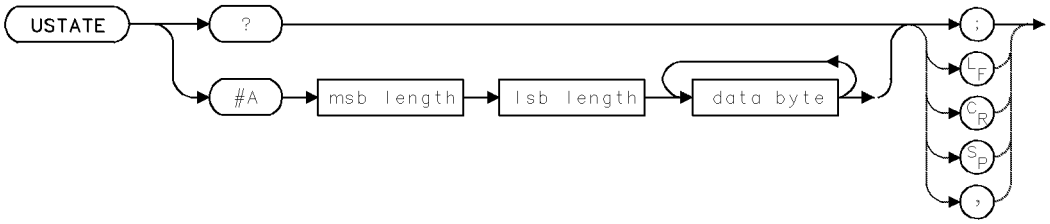


| Item | Description |
|---|---|
| Interdependent Commands | DISPOSE, FUNCDEF, VARDEF, ONEOS, KEYDEF, READMENU, TRDEF, SAVES, NSTATE, SAVEU, PINPUT, PADC, POWER, PSTATE, PROTECT, USERERR, USERMSG |

## Example

Return the user state to the controller.

```
10 INTEGER Separator,Data_length
20 DIM Filename$[160]
30 !
40 Separator=0
50 Hpib_addr=718                          Customize these two lines as required.
60 Filename$="T_USTATE"
70 !
80 ASSIGN @Sa TO Hpib_addr                Open I/O path to spectrum analyzer.
90 ON ERROR GOSUB Kill_file               We need to recreate it each time we use
                                          it.
100 CREATE BDAT Filename$,1
110 OFF ERROR
120 ASSIGN @Disc TO Filename$             Open I/O path to disk file.
130 !
140 OUTPUT @Sa;"USTATE?;"                 Return user state to computer.
150 !
160 REPEAT                                Repeat until separator not valid returned.
170 ENTER @Sa USING "#,2X,W";Data_length  Read length of block of data.
180 ALLOCATE U_state$[Data_length]        Dimension to correct length.
190 Format$="%,"&VAL$(Data_length)&"A"    Specify read format.
200 ENTER @Sa USING Format$;U_state$      Read the string.
210 OUTPUT @Disc;Data_length,U_state$     Write length of string to disk.
220 DEALLOCATE U_state$                   Create a new next loop.
230 ENTER @Sa USING "%,B";Separator       Check for more data.
240 UNTIL Separator44                     CHR$(44) is a comma, the valid separator.
250 ASSIGN @Disc TO *                     Close disk file.
```

```
260 STOP
270 !
280 Kill_file: !
290 PURGE Filename$
300 RETURN
320 !
330 !
340 END
```

The USTATE command transmits all information that is stored in **internal memory** by the user. This information is called the **user state** and includes settings determined by the user and unaffected by instrument preset, such as the HP-IB addresses, the preset input-port setting (PINPUT), power-up setting (POWERON), and the protect-state-register setting (PSTATE). Also transmitted are the contents of internal memory, which are listed in the following table.

**Table 2-28. Catalog of Internal Memory**

| Stored Article | Storing Commands | File Type | Default File Prefix |
|---|---|---|---|
| User-defined trace | TRDEF, LIMILINE, LOAD, RCLD | TRACE | none |
| User-defined variable | VARDEF, LOAD, RCLD | VAR | none |
| User-defined function | FUNCDEF, LOAD, RCLD | FUNC | none |
| Active user-defined function | ACTDEF, LOAD, RCLD | AFUNC | none |
| On-end-of-sweep algorithm | ONEOS, LOAD, RCLD | ONEOS | none |
| Trace-amplitude correction offsets | AMPCOR | AMPCOR | none |
| State-register file (Instrument settings and title-line) | STOR, LOAD, SAVES, NSTATE | ASCII | s_ |
| Trace file | STOR, SAVET | ASCII | t_ |
| (USER) keys file | STOR, SAVEU | ASCII | u_ |
| Limit-line file | STOR, LIMISAV | ASCII | l_ |

USTATE? returns the user state to the computer. Also returned are instructions required by the spectrum analyzer when the user state information is transmitted to the spectrum analyzer.

## Query Response

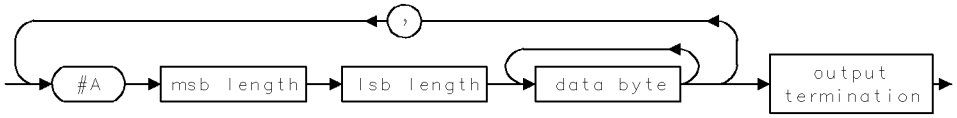


User-state data is in absolute, block-data format and is preceded by spectrum analyzer instructions.

# VARDEF

DEFINE USER-DEFINED VARIABLE

Store **user-defined variables** in **internal memory**.

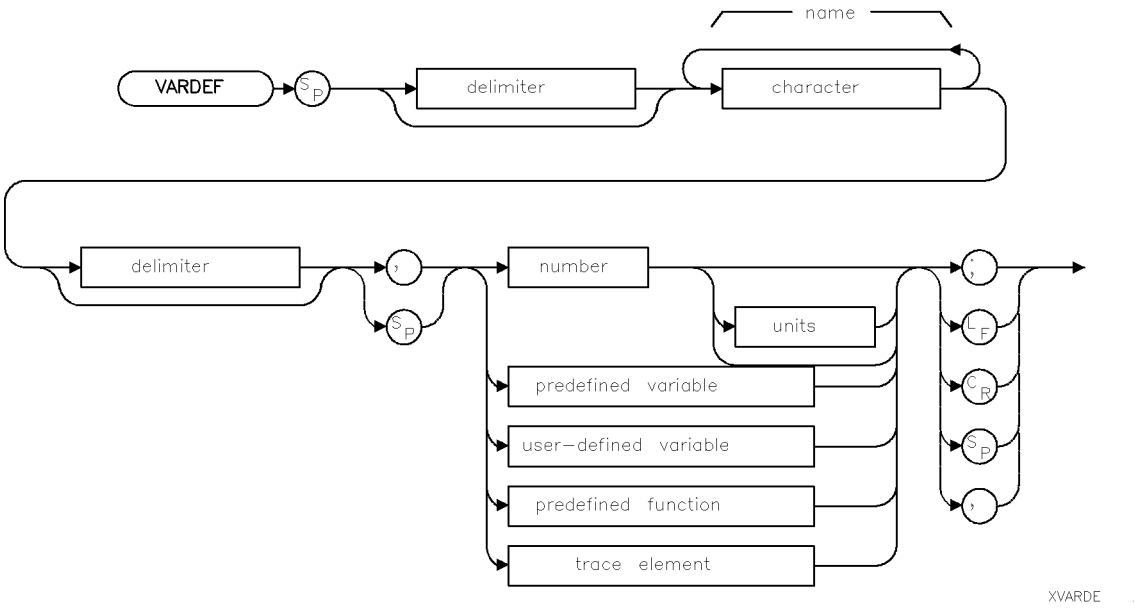


| Item | Description |
|---|---|
| Variable-Name Range | 1 – 12 characters: A – Z, 0 – 9, and the underscore (_) |
| Variable-Name Restrictions | A delimiter is required before and after a name when it contains a number or lowercase letters. When the name is uppercase alpha characters only, delimiters are optional. |
| Requirements | Requires internal memory. See Appendix D for commands that consume memory. VARDEF required when using *user-defined variable*. |
| Interdependent Commands | DISPOSE, LOAD, PROTECT, FORMAT, RCLD, PURGE |

## Example

Use VARDEF to create user-defined variables.

```
160 OUTPUT 718;"VARDEF VAR,0;"
170 OUTPUT 718;"VAR EP;"
180 OUTPUT 718;"VAR?;"
190 ENTER 718;N
```

*Define user-defined variable, called VAR, equal to zero.*

*Change the value of VARDEF using the front panel controls. Enter a value, then press* `ACCEPT VALUE`.

*Return value of VAR to computer.*

*Assign value to computer variable, N.*

The VARDEF command creates a user-defined variable and assigns it a value. User-defined variables can be used in many of the spectrum analyzer remote-control processes. Use user-defined variables wherever *user-defined variable* appears in the syntax diagrams.

An error results if a variable name is the same as any reserved word. For a list of reserved words, refer to the index or refer to the HP 70900A/B LO module firmware note.

User-defined variables occupy **internal memory**. Use the PURGE, FORMAT, or DISPOSE command to clear user-defined variables from memory.

See "Memory" under "Storing New Functions in the Spectrum Analyzer" in Programming Fundamentals chapter.

## Syntax to Change Value

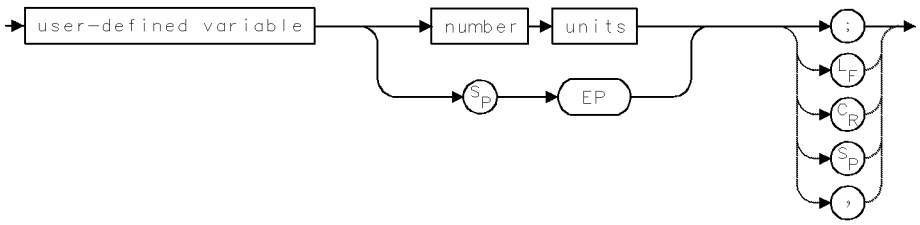


## Query Syntax

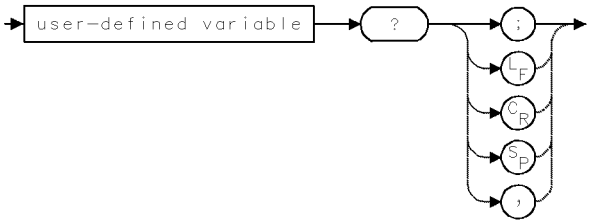


## Query Response

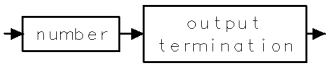

# VARIANCE

VARIANCE

Compute variance.

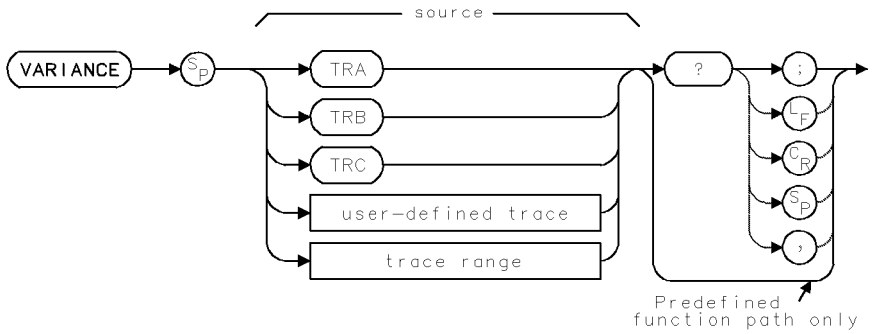


| Item | Description |
|---|---|
| Source-Amplitude Range | 0 – 10,000 measurement units for linear trace data. –32,768 – +32,767 measurement units for logarithmic trace data. |
| Source-Length Range | 3 – 1024 position units. Default is 800 position units when using TRA, TRB, TRC. |
| Requirements | Be sure data reflects one complete sweep when using *TRA*, *TRB*, *TRC*, or *trace range* for source. SNGLS and TS suggested. TRDEF required when using *user-defined trace*. |

## Example

Return variance of amplitude values in trace A.

```
120 CLEAR 718                       Initialize spectrum analyzer.
130 OUTPUT 718;"IP;"
140 OUTPUT 718;"SNGLS;TS;"          Activate single-sweep mode and sweep measure-
                                    ment range.
150 OUTPUT 718;"VARIANCE TRA?;"     Return variance of trace A to computer.
160 ENTER 718;N                     Store value in computer variable.
170 DISP N;"MEASUREMENT UNITS"      Display value on computer display.
```

The VARIANCE command computes the amplitude variance of the specified trace, in measurement units.

VARIANCE must be used as either a query or as a source in another analyzer-command function. Form a query by ending the VARIANCE statement with a question mark (?). When used as a query, VARIANCE returns the variance to the computer.

Use VARIANCE as a source by incorporating the VARIANCE statement into the source of any command having *predefined function* in its syntax diagram. When VARIANCE is used as a source, the variance is used for operation by the command that contains VARIANCE.

See “Using Predefined Functions as Sources” under “Math Functions, Variables, and Trace Arrays” in Programming Fundamentals chapter.

## Predefined-Function Syntax

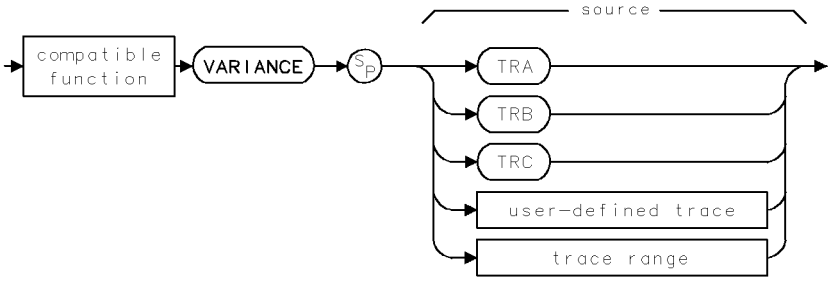


## Query Syntax

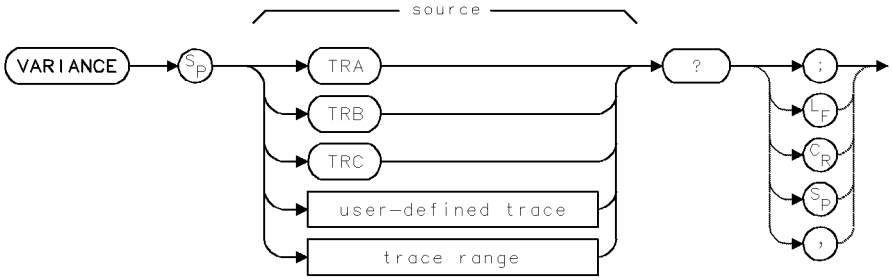


## Query Response

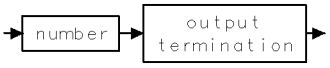

# VAVG

VIDEO AVERAGE

Reduce amplitude variation of trace using digital averaging.

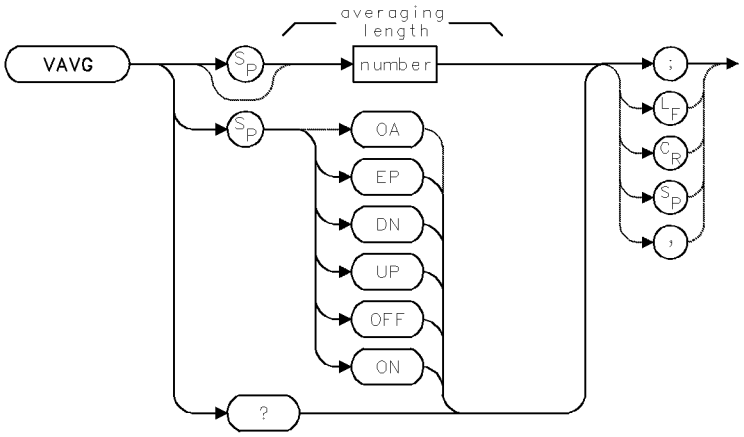


| Item | Description |
|---|---|
| Averaging-Length Range | 0 – 10,000 |
| Step Increment | 1, 2, 5, 10 sequence |
| Requirements | Sweep measurement range after executing VAVG. Execute VAVG during clear-write mode. (IP or CLRW activates clear-write mode.) |
| Interdependent Commands | TRPST, DET, TM, VTL, VTH |
| Preset State | `VAVG OFF; VAVG 100` |

## Example

Reduce the displayed noise level without slowing the sweep time.

```
10 OUTPUT 718;"IP;"                    Initialize spectrum analyzer.
20 OUTPUT 718;"SNGLS;"                 Activate single-sweep mode.
30 OUTPUT 718;"CF 300MHZ;SP 1MHZ;"     Set measurement range.
40 OUTPUT 718;"TS;"                    Sweep new measurement range.
50 OUTPUT 718;"VAVG EP;"               Specify number of sweeps averaged. Enter
                                       value with front panel controls, then press
                                       ACCEPT VALUE.
60 OUTPUT 718;"TS;"                    Sweep.
```

The VAVG command is a digital averaging routine that reduces the noise level, but does not affect the sweep time, bandwidth, or any other analog characteristic of the spectrum analyzer.

VAVG operates on trace A, B, or C during clear-write mode. The averaging function sets the averaging counter to 1, then begins averaging the trace as it sweeps. The active readout indicates the number of sweeps averaged; the default is 100 unless otherwise specified. Increasing the number of sweeps averaged increases the reduction of displayed noise.

When video averaging is on, the take-sweep command (TS) resets the counter to 1, then initiates the number of sweeps specified for averaging. The counter is also reset to 1 whenever any command changes the measurement data. VAVG activates sample detection. (See DET.)

Commands that follow VAVG are executed while the averaging routine is executing. However, if TS follows VAVG, subsequent commands after TS are not executed until the end of the averaging routine.

Use VAVG to view low-level signals without slowing the sweep time. If a large averaging number is specified, video averaging can lower the noise level more than 1-Hz video-bandwidth filtering can. Video averaging may also be used to monitor instrument state changes (changing bandwidths, center frequencies, and so forth) while maintaining a low noise level.

See VB and SMOOTH.

## Query Response

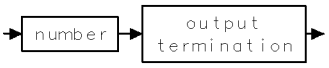

# VB

VIDEO BANDWIDTH

Select post-detection, video bandwidth filter to reduce noise of trace data.

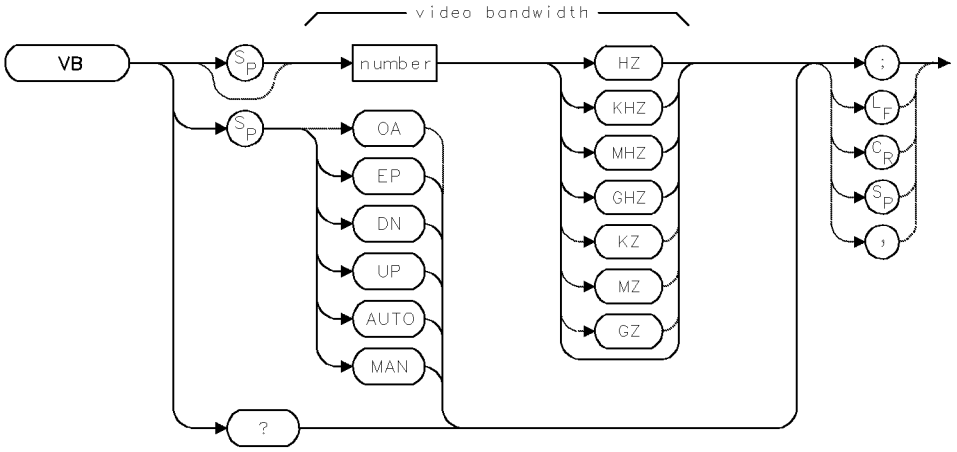


| Item | Description |
|---|---|
| Bandwidth Range | 1 – 1000 GHz, or hardware limit. |
| Coupling | Sweep time (ST) is coupled to video bandwidth. Video bandwidth is coupled to resolution bandwidth (RB). |
| Step Increment | 1, 3, 10 sequence |
| Interdependent Commands | RB, SP, ST |
| Preset State | `VB AUTO` |

## Example

Set the video bandwidth.

```
140 OUTPUT 718;"VB 100KHZ;"     Set video bandwidth to 100 kHz
```

The VB command sets the post-detection, video filter bandwidth.

The video-bandwidth, resolution bandwidth, and sweep-time settings are coupled to yield the maximum amplitude response with optimum sweep times. Specifying a bandwidth with VB, or executing `VB MAN` breaks the coupling. To reestablish coupling, execute `VB AUTO`.

The ratio between the video-bandwidth and resolution bandwidth settings is controlled by the VBR command.

## Query Response

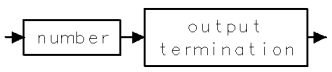

# VBR

VIDEO BANDWIDTH RATIO

Set video-bandwidth/resolution bandwidth ratio.

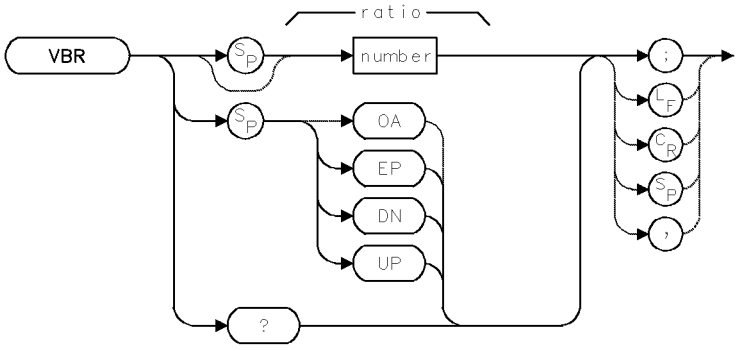


| Item | Description |
|---|---|
| Ratio Range | $10^{-100}$ – $10^{100}$ |
| Step Increment | 1, 3, 10 sequence |
| Interdependent Commands | VB |
| Preset State | VBR 1 |

## Example

Change the ratio between the video-bandwidth and resolution bandwidth settings.

```
140 OUTPUT 718;"VBR 0.20;"    Set video-bandwidth/resolution bandwidth ratio to .2
```

The VBR command specifies the ratio between the video- and resolution bandwidth filters that is maintained when they are coupled. VBR 1 equalizes the filter bandwidths. The filters are coupled, unless the RB or VB commands have been executed. (See RB and VB.)

VBR determines the ratio as follows:

video bandwidth / resolution bandwidth = VBR setting

## Query Response

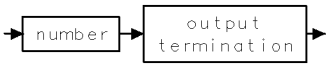

# VIEW

VIEW TRACE

Stop updating trace and store trace data.

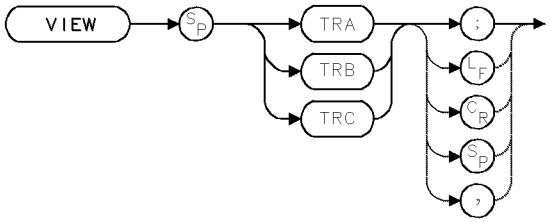


| Item | Description |
|---|---|
| Interdependent Commands | TRSTAT |

## Example

Store and view trace B measurement results.

```
110 OUTPUT 718;"CF 300MHZ;SP 1MHZ;"          Set measurement range.
120 OUTPUT 718;"CLRW TRB;TS;BLANK TRA;"      Measure with trace B. Blank trace A.
130 OUTPUT 718;"WAIT 2S;"                    Wait 2 seconds.
140 OUTPUT 718;"VIEW TRB;"                   View trace B.
```

The VIEW command stops sweeping the specified trace and displays it.

# VTDL

VIDEO TRIGGER DISPLAY LINES

Control the video trigger display lines.

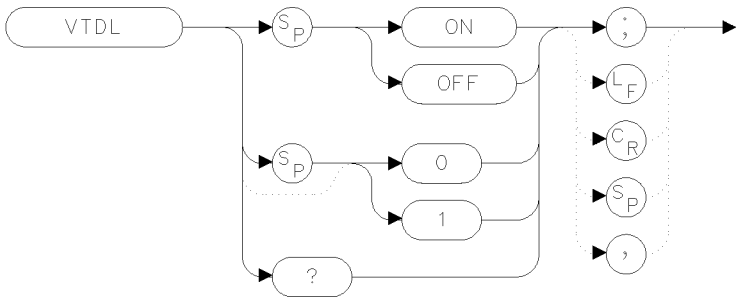


xvtdl

| Item | Description |
|---|---|
| Preset State | VTDL OFF |

## Example

```
100 OUTPUT 723;"VTDL ON;"
```

The VTDL command displays two horizontal video trigger display lines: trigger level and hysteresis offset. The trigger level line is a line that is placed at a level which corresponds to the current video trigger level. On HP 70004A color displays, the line is the same color as defined for MARKERS. This is determined by the display's "Adjust Color" menu. On monochrome displays, a dot-dash line is used.

The hysteresis offset line is an line that is offset from the trigger level line so as to indicate the size and polarity of video hysteresis necessary to cause a video trigger. On HP 70004A color displays, the line is the same color as defined for ADVISE (UNCAL) indicators. On monochrome displays, a sparse dot line is used.

The video trigger display lines are automatically activated when video triggering is selected and when either the video trigger level command (VTL) or the video trigger hysteresis command (VTH) is active. (The video trigger level display line cannot be turned off when either VTL or VTH is active.)

The display of these lines is automatically deactivated when another trigger mode is selected (as long as neither VTL nor VTH is active). The VTDL command can be used to override the automatic operation. The displays work in logarithmic, linear volts, and linear watts display modes.

## Query Response

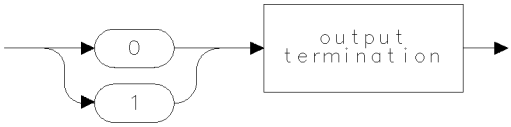


qgen0

## See Also

VTDL, VTH, VTL

# VTH

VIDEO TRIGGER HYSTERESIS

Select slope of detected signal shape that triggers sweep.

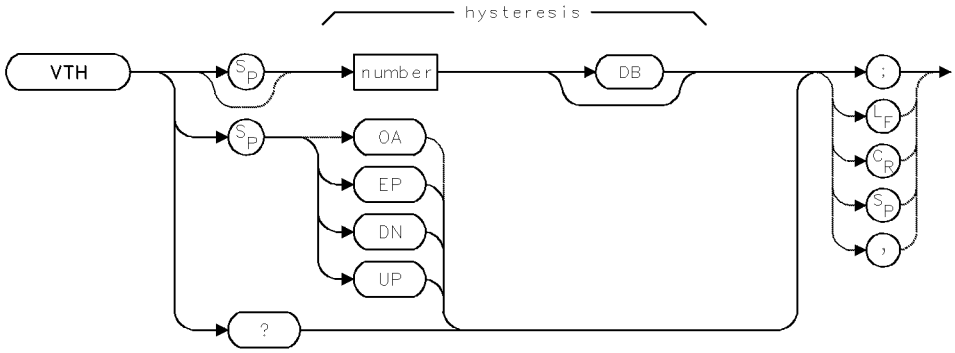


| Item | Description |
|---|---|
| Range | ± 300 dB |
| Step Increment | 1 major vertical division during log mode. 1 major vertical division at top graticule line (.915 dB) during linear mode. |
| Interdependent Commands | TS, VTL, TM |
| Preset State | `VTH 3DB` |

The VTH command determines the direction and magnitude of change in the detected video-signal level that triggers a sweep during the video trigger mode.

Triggering occurs when the following conditions are met:

- The video-signal level changes by the magnitude specified by the VTH command.
- The video-signal level passes the video-trigger level specified by the VTL command.

When VTH specifies a positive value, the sweep triggers on the positive-going edge of the detected signal envelope. A negative value triggers a sweep on the negative-going edge.

## Query Response

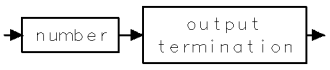

# VTL

VIDEO TRIGGER LEVEL

Selected signal level that triggers sweep.

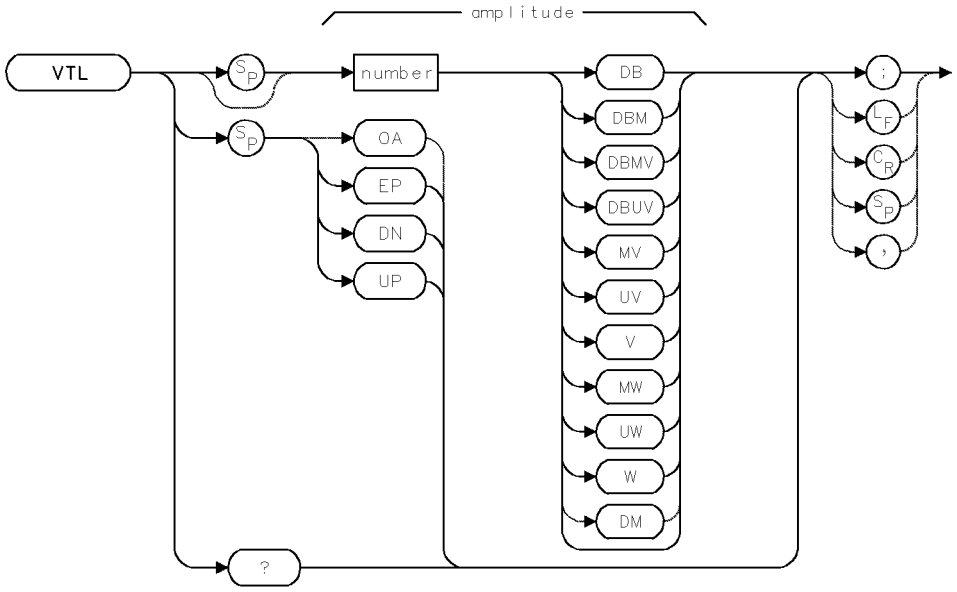


| Item | Description |
|---|---|
| Amplitude Range | ± 300 dBm or hardware limit. |
| Step Increment | 1 major vertical division |
| Interdependent Commands | VTH, TM, TS |
| Preset State | `VTL -100DBM` (or value at bottom of graticule). |

## Example

Set the video trigger level.

```
10 OUTPUT 718;"VTL -50DBM;"
```

During the video trigger mode, the sweep begins when the detected signal level has reached a specific amplitude level. The VTL command specifies the amplitude level. See TM and VTH.

## Query Response

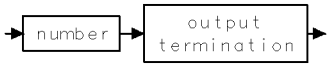

# VW

VIEW ITEM

Draw or blank stored graphics **item**.

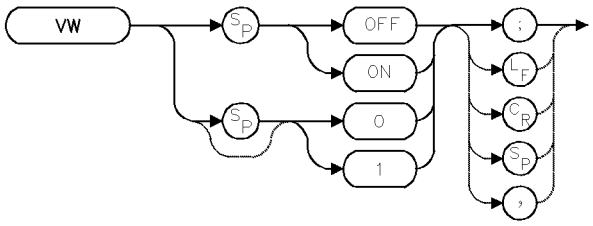


| Item | Description |
|---|---|
| Interdependent Commands | CLRDSP, IT |

## Example

Blank an item (referenced graphics.)

```
20 CLEAR 718                              Initialize spectrum analyzer.
30 OUTPUT 718;"IP;"
40 OUTPUT 718;"CLRDSP;"                   Clear graphics from memory.
50 OUTPUT 718;"IT 1;VW OFF;"              Address item 1. Blank item so that it is
                                          not seen while it is being defined.
60 OUTPUT 718;"TEXT$This is item #1.$;"   Define item 1 as text.
70 OUTPUT 718;"IT 1;OR 300,600;"          Position item.
80 OUTPUT 718;"VW ON;"                    Display item 1.
```

The VW command blanks or displays graphic items that have been created with the IT command. See IT. See also “Items” in “Creating Graphics” in the Programming Fundamentals chapter.

# WAIT

WAIT

Suspend program operation for specified time.

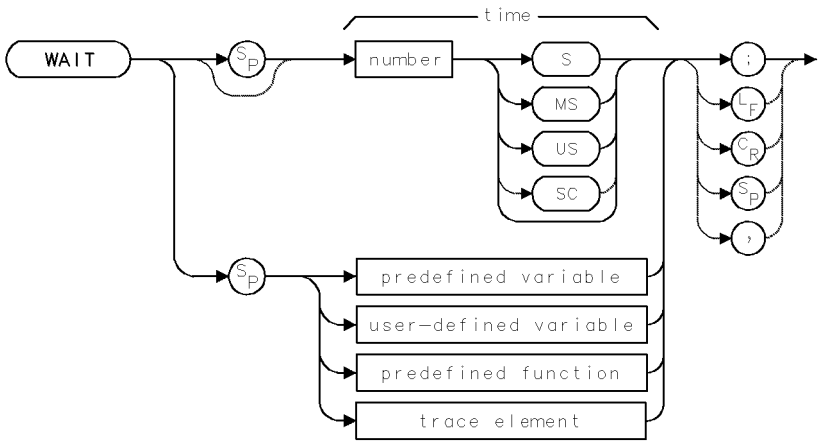


| Item | Description |
|---|---|
| Range | 0 – 1000 seconds |

## Example

Use WAIT to suspend program operation.

```
130 OUTPUT 718;"TRDSP TRA,OFF;"     Blank trace A.
140 OUTPUT 718;"WAIT 2S;"           Suspend program operation for 2 seconds.
150 OUTPUT 718;"TRDSP TRA,ON;"      Display trace A.
```

The WAIT command suspends program execution for the specified time.

# WARN

WARNING QUERY

Return the most recent reported warning code. Only one warning code is reported at a time because the current depth of the warning queue is one.

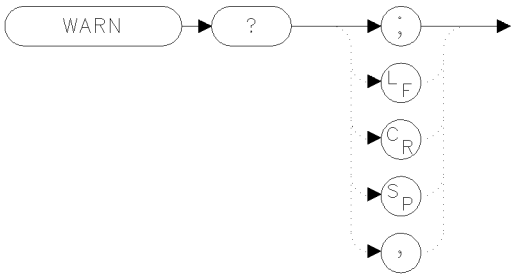


xwarn

| Item | Description |
|---|---|
| Preset State | 10000 |

## Example

```
100 OUTPUT 723;";"
100 OUTPUT 723;"WARN?;"
```

If no warnings have been displayed, the default value of 10000 is returned.

In addition to the error channel, there is a channel for issuing warnings. A warning is not used to indicate a operational problem in the instrument. Rather, a warning is issued to indicate that a user might not be performing a task properly.

The current depth of the warning queue is one. Any new warning will displace the previous warning. Warnings can come from the instrument control module (HP 70900B local oscillator source), a slave module, or from an application program.

Warnings are cleared by reading them (via WARN or XWARN). Any display key press will also clear the warnings (this clearing also occurs for errors). If errors are read before the warnings are read (using ERR or XERR), the warnings will also be cleared. Finally, if none of these events occur, the warning will automatically be cleared after approximately six seconds.

Bit 5 of the status byte is used to report the presence of a warning (see STB and related commands for other information concerning the status byte).

The default operation is for warnings to be issued as appropriate. However, WARNCTRL can be used to disable the display and reporting of warnings. IP enables warnings.

The warning area is a 2 line by 22 character area centered at the bottom of the graticule area. The ADVISE color (also used for the UNCOR and UNCAL indicators) is used for this area. The actual warning text is displayed in inverse video.

If display of the active function area is disabled, the warning area will be suppressed. In addition, if the instrument is too small to support a full size active function area, the warning area will also be suppressed. In such cases, the warnings can still be accessed via WARN and XWARN.

The following list shows the possible error messages.

Error 10000: *Default - No warning displayed.*
Error 16001: Simulated hardware
Error 16002: Trace length changed (due to ADC switch)
Error 16003: Usable RBW limited
Error 16004: Usable VBW limited
Error 16005: Sweep too fast
Error 16006: No current state 0
Error 16007: Possible compression
Error 16009: RBW too wide for PP (currently unused)
Error 16010: RBW too wide for PC
Error 16012: PSDAC adjust past RL

## Query Response

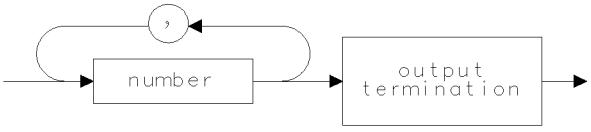


qgnumr

## See Also

STB, USERWARN, WARN?, WARNCTRL, XWARN

# WARNCTRL

WARNING CONTROL

Enable or disable warning messages.

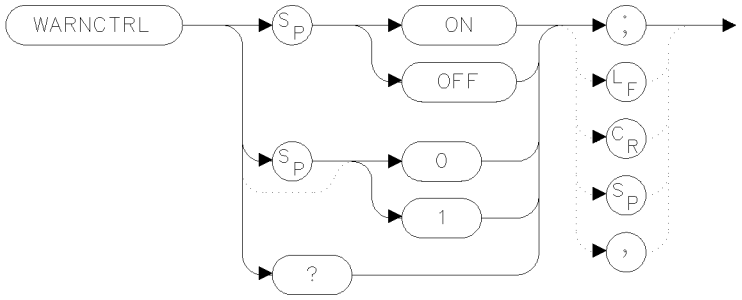


xwrncl

```
100 OUTPUT 723;";"
100 OUTPUT 723;"WARNCTRL ON;"
```

The WARNCTRL command prevents the display and reporting of warnings. An instrument preset (IP command) enables warnings. If display of the active function area is disabled, the warning area will also be suppressed. Warnings can still be accessed via WARN and XWARN.

## Query Response

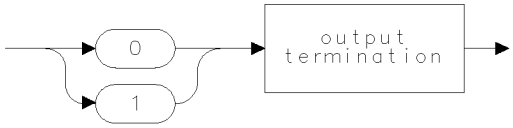


qgen0

## See Also

STB, USERWARN, WARN?, WARNCTRL, XWARN

# XCH

EXCHANGE

Exchange sources.

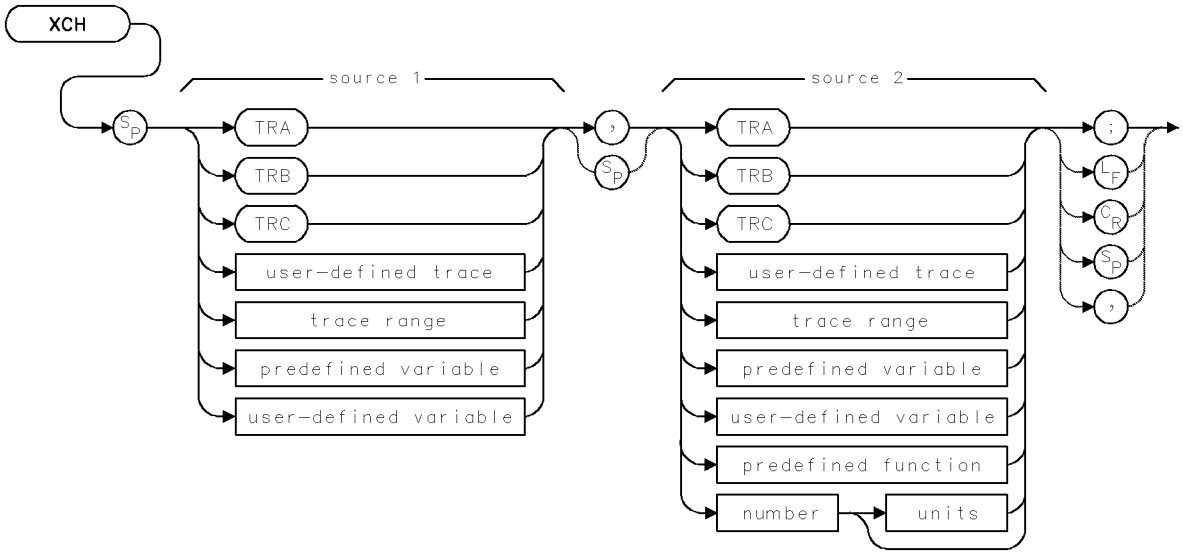


| Item | Description |
|---|---|
| Source or Destination Amplitude Range | 0 – 10,000 measurement units for linear trace data in *TRA*, *TRB*, *TRC*, *trace range*, or *user-defined trace*. −32,768 – +32,767 measurement units for logarithmic trace data in *TRA*, *TRB*, *TRC*, *trace range*, or *user-defined trace*. $\pm$ 1.8 $\times$ $10^{308}$ when using *number*, *predefined variable*, or *user-defined variable*. |
| Source-Length Range | 1 – 1024 position units. Default is 800 position units when using *TRA*, *TRB*, *TRC*. |
| Requirements | Be sure data reflects one complete sweep when using *TRA*, *TRB*, *TRC*, or *trace range* for source. SNGLS and TS suggested. TRDEF required when using *user-defined trace*. VARDEF required when using *user-defined variable*. |

## Example

Use the XCH command to modify trace A.

```
100 OUTPUT 718;"SNGLS;TS;"                    Activate single-sweep mode. Sweep
                                              trace A.
110 OUTPUT 718;"XCH TRA[1,400],TRA[401,800];" Exchange the amplitudes of the
                                              first 400 elements of trace A with
                                              the last 400 elements.
120 OUTPUT 718;"VIEW TRA;"                    View trace A.
```

The XCH command exchanges the contents of sources 1 and 2. If either of the sources is trace A, B, or C, the trace conditions are updated accordingly.

# XERR

EXTENDED ERROR QUERY

Return description of error and error-reporting module.

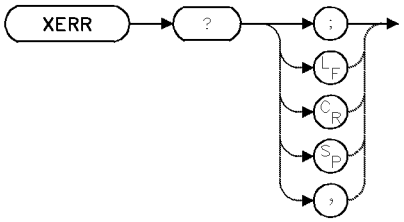


| Item | Description |
|---|---|
| Interdependent Commands | IP clears errors from register. |

## Example

Use XERR to return error report to computer.

```
140 ALLOCATE Error$[200]
150 OUTPUT 718;"JKLD;"              Send the spectrum analyzer a meaningless command.
160 OUTPUT 718;"VB -2KHZ;"          Attempt to set the spectrum analyzer to an un-
                                    available video bandwidth.
170 OUTPUT 718;"CLRW;"              Send the spectrum analyzer illegal syntax.
180 OUTPUT 718;"WAIT 2S;"           Wait 2 seconds.
190 OUTPUT 718;"XERR?;"             Return reported errors to computer.
200 ENTER 718 USING "-K";Error$     Store error messages in string variable, accepting
                                    line feeds.
210 PRINT Error$                    Print error report on computer.
```

The XERR command returns error information when an instrument in a system encounters an error. Information returned includes the name and HP-MSIB address of the module reporting the error, the error code, and a description.

## Query Response

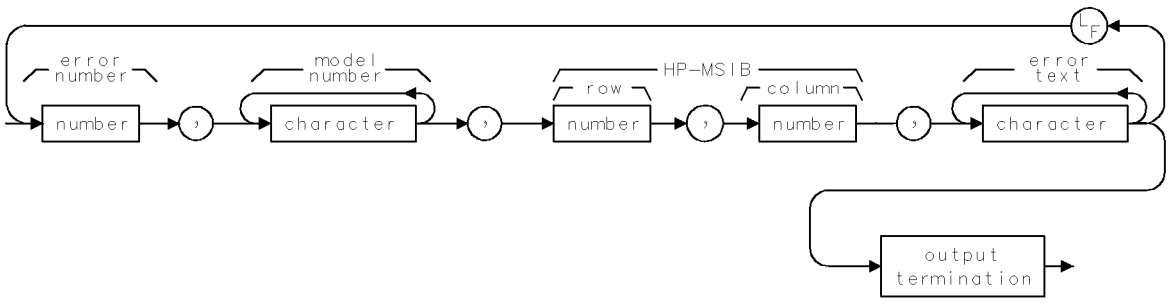

# XNOISE

EXTERNAL NOISE SOURCE DRIVE

Toggles a +28 Vdc noise source drive to a front panel connector of the HP 70620B preamplifier or HP 70621A preamplifier to drive an external noise source on and off while making noise figure measurements.

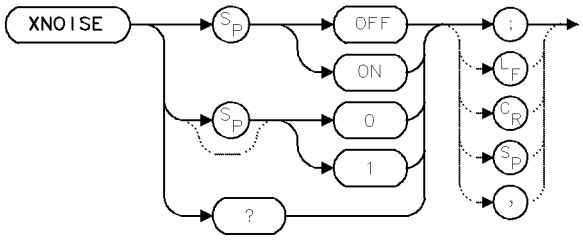


| Item | Description |
|---|---|
| Interdependent Commands | RCLS, PREAMP, SAVES |
| Preset State | XNOISE OFF |

## Example

Use XNOISE to make Noise Figure Measurements.

Connect an external noise source such as an HP 346A/B/C to DUT input.

Connect the DUT output to the analyzer input.

Connect the drive from preamp 28 Vdc noise source drive to the noise source.

```
10 CLEAR 718                    Initialize analyzer.
20 OUTPUT 718;"IP;"
30 OUTPUT 718;"SP 0;"           Set up span.
40 OUTPUT 718;"VB 10KHZ;"       Set up video bandwidth
50 OUTPUT 718;"XNOISE ON;"      Turn on noise source.
60 OUTPUT 718;"MKN;"            Display marker at center of trace.
70 OUTPUT 718;"MKA?;"           Return marker amplitude to computer
80 ENTER 718;D_on               Assign marker to computer variable.
90 OUTPUT 718;"XNOISE OFF;"     Turn off noise source
100 OUTPUT 718;"MKN;"           Display marker at center of trace.
110 OUTPUT 718;"MKA?;"          Return marker amplitude to computer
120 ENTER 718;D_off             Assign marker to computer variable.
```

This noise figure measurement technique uses a calibrated noise source that can be turned on and off. The ratio of the measured noise level (linear) between the on and off states of the noise source, commonly known as the Y factor, is used to calculate the noise figure.

XNOISE selects the front panel noise source connection.

XNOISE ON provides 28 Vdc to drive an external noise source.

XNOISE OFF turns off the 28 Vdc.

## Query Response

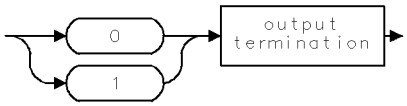

# XWARN

EXTENDED WARNING

Return an extended warning code which includes the most recent reported warning code along with descriptive text. Only one warning code is reported at a time because the current depth of the warning queue is one.

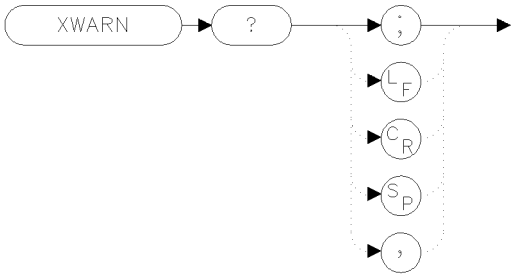


xwarnx

| Item | Description |
|---|---|
| Preset State | 10000 |

## Example

```
100 OUTPUT 723;";"
100 OUTPUT 723;"XWARN?;"
```

If no warnings have been displayed, the default value of 10000 is returned.

In addition to the error channel, there is a channel for issuing warnings. A warning is not used to indicate a operational problem in the instrument. Rather, a warning is issued to indicate that a user might not be performing a task properly.

The current depth of the warning queue is one. Any new warning will displace the previous warning. Warnings can come from the instrument control module (HP 70900B local oscillator source), a slave module, or from an application program.

Warnings are cleared by reading them (via WARN or XWARN). Any display key press will also clear the warnings (this clearing also occurs for errors). If errors are read before the warnings are read (using ERR or XERR), the warnings will also be cleared. Finally, if none of these events occur, the warning will automatically be cleared after approximately six seconds.

Bit 5 of the status byte is used to report the presence of a warning (see STB and related commands for other information concerning the status byte).

The default operation is for warnings to be issued as appropriate. However, WARNCTRL can be used to disable the display and reporting of warnings. IP enables warnings.

The warning area is a 2 line by 22 character area centered at the bottom of the graticule area. The ADVISE color (also used for the UNCOR and UNCAL indicators) is used for this area. The actual warning text is displayed in inverse video.

If display of the active function area is disabled, the warning area will be suppressed. In addition, if the instrument is too small to support a full size active function area, the warning area will also be suppressed. In such cases, the warnings can still be accessed via WARN and XWARN.

The following list shows the possible error messages.

Error 10000: *Default - No warning displayed.*
Error 16001: Simulated hardware
Error 16002: Trace length changed (due to ADC switch)
Error 16003: Usable RBW limited
Error 16004: Usable VBW limited
Error 16005: Sweep too fast
Error 16006: No current state 0
Error 16007: Possible compression
Error 16009: RBW too wide for PP (currently unused)
Error 16010: RBW too wide for PC
Error 16012: PSDAC adjust past RL

## Query Response

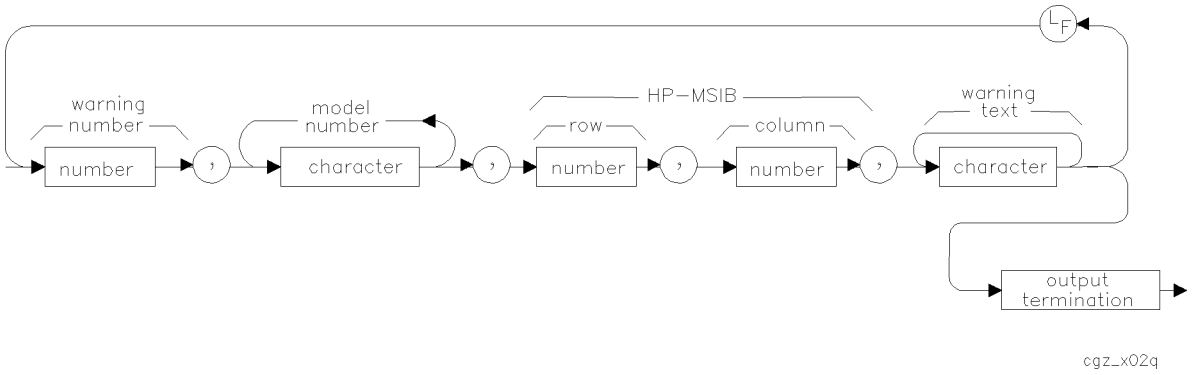

# YLABELS

Y-AXIS LABELS

Control the display of annotation for the horizontal graticule.

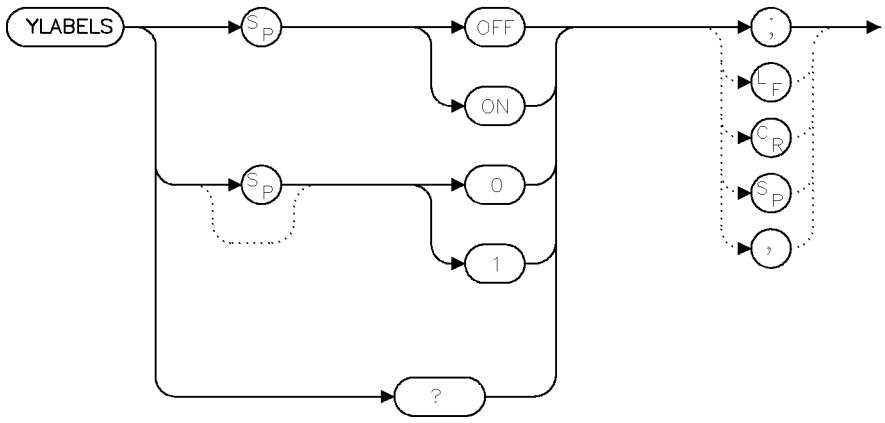


ylabels

| Item | Description |
|---|---|
| Requirements | There needs to be room for 20 lines of text in the graticule area in order for the annotation to be displayed (this requires nearly a full screen display). |

## Example

```
YLABELS ON;    Turn y-axis annotation on.
YLABELS OFF;   Turn y-axis annotation off.
YLABELS 1;     Same as YLABELS ON;.
YLABELS 0;     Same as YLABELS OFF;.
YLABELS?       Report the current display state (0/1).
```

YLABELS controls the display of annotation for the y-axis. The default is to not display this annotation. When this annotation is on, a number will be displayed on or next to ten of the horizontal graticule line positions (GRAT need not be ON for YLABELS to be ON). The label positions are properly adjusted to account for the effects of GRATSCRL.

Only numbers (not units) are displayed. The units are the same as for the RL display. The precision of the annotation will be the same as for the RL display, with the exception that there is an upper limit of five significant digits (due to limited screen space.)

The values displayed can be affected by the RL, RLPOS, LG, LN, and GRATSCRL commands (as well as any other state changes that affects the RL and the y-axis scaling). AUNITS affects the y-axis annotation in the same way that RL is affected. YLABELS respects ANNOT OFF.

When YLABELS is on, a number will be displayed on or next to ten of the horizontal graticule line positions. The label positions are properly adjusted to account for the effects of GRATSCRL. Each number starts slightly left of the center of the graticule area.

Turning on YLABELS can reduce system speed due to the number of calculations needed when the labels change.

## Query Response

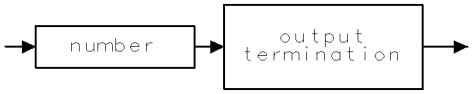


qgennum

# ZERO

OPTICAL POWER METER ZEROING

Zero optical power meter.

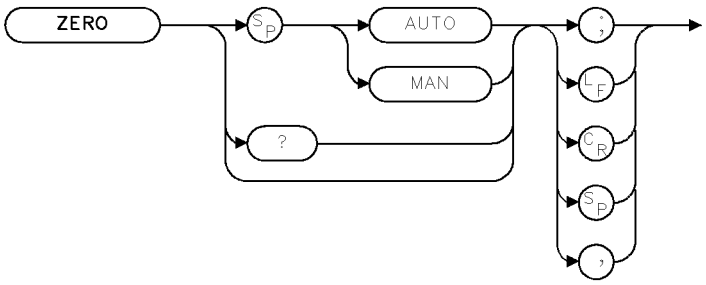


XZERO

| Item | Description |
|---|---|
| Requirements | Requires a lightwave module. |
| Preset State | AUTO |
| Interdependent Commands | INPUT |

## Example

```
10 OUTPUT 718;"ZERO MAN;"      Select manual zeroing.
20 OUTPUT 718;"ZERO?;"         Ask analyzer what zeroing mode is.
30 ENTER 718;N                 Enter analyzer reply into program variable.
```

Some power meters must be adjusted periodically. For example, the HP 70810B lightwave section optical power meter must be adjusted periodically to compensate for the PIN photodiode's dark current. The power meter zeroing algorithm can be invoked automatically at fixed periodic intervals or on command. With ZERO AUTO in effect, zeroing will be done periodically, at intervals determined by the power meter (lower power levels at the detector typically cause more frequent zeroing). If a ZERO command is received while in ZERO AUTO mode, the zeroing algorithm will be executed immediately and a new zeroing interval will be computed based on the time of the forced zero. A ZERO command in ZERO AUTO mode does not turn off auto-zeroing.

In ZERO MAN mode, zeroing will only be done when a ZERO or ZERO MAN command is received. A ZERO AUTO command in manual zeroing mode will cause an immediate zeroing, and resumption of automatic, periodic zeroing.

**Note** Using manual zeroing mode may cause inaccurate power measurements if zeroing is not done often enough.

## Query Response

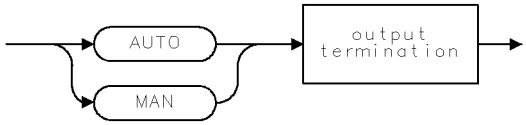


QAUTMA

# ZOOMRB

ZOOM TO RESOLUTION BANDWIDTH

Select resolution bandwidth, then narrow span to zero hertz.

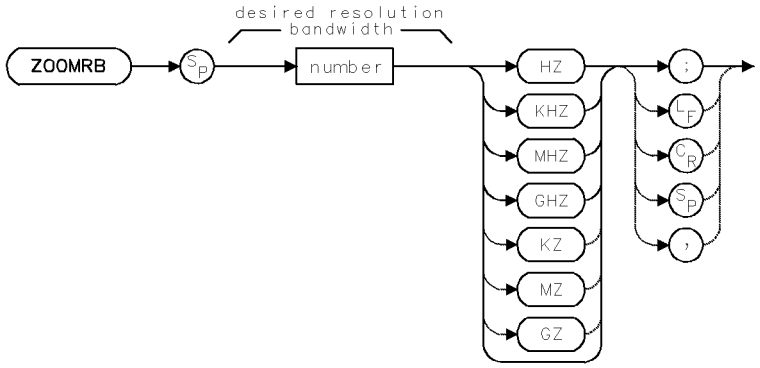


| Item | Description |
|---|---|
| Range | 0 – 1000 GHz or hardware limit |
| Interdependent Commands | RB |

The ZOOMRB command instructs the spectrum analyzer to measure a signal in zero span with a desired resolution bandwidth (RB). After ZOOMRB is executed, the spectrum analyzer narrows the frequency span and sweeps the measurement range until the frequency of the desired signal is measured accurately enough to observe the signal in zero span with the desired resolution bandwidth.

If RB is set to automatic, the resolution bandwidth narrows as the frequency span narrows, until the desired resolution bandwidth is reached. If RB is set to manual, the desired resolution bandwidth is selected before the frequency span is reduced.

To use the function, first select a signal or frequency of interest using the marker functions, (for example, MKN or MKF) then execute the ZOOMRB command, specifying the desired resolution bandwidth.

The ZOOMRB function is quicker than the marker-tracking function, MKTRACK, because ZOOMRB does not require the narrowest resolution bandwidth.

# 3

# Error Messages

Representative error messages for HP 70000 Series modular spectrum analyzer systems are listed on the following pages. For information about error messages not listed here, refer to the installation and verification manual for the element that is generating the error.

These error messages are grouped by functional category each category has its own series of numbers. A definition of the functional category is given at the beginning of each error message listing.

| Types | Numbers |
|---|---|
| User Application | 0001—0999 |
| Operating | 2000—2999 |
| Hardware-Warning | 6000—6999 |
| Hardware-Broken | 7000—7999 |
| Computation | 8000—8999 |
| Factory Use Only | 9000—9999 |

The spectrum analyzer displays error messages, which can also be retrieved via HP-IB by executing the `ERR?` programming command.

Operating, hardware-warning, hardware-broken, and computation error messages report the element model number and HP-MSIB address of the module that is generating the error condition.

# User Application Errors 0001 – 0999

The numbers 0001—0999 are reserved for error messages that are created for user-application programs and loaded into RAM.

## Error Messages for System Diagnostics

One example of a user-application program is "System Diagnostics," a down-loadable program (DLP) designed by Hewlett-Packard. The system diagnostics error messages are listed below. These diagnostic error messages range from 0001 – 0070.

The asterisk (*) printed before some of the following error code messages indicates that the program stops until the error is no longer being generated. The asterisk does not appear on the display screen.

**Note** When a customer-designed down-loadable program is used, any error numbers assigned to the program should not duplicate system diagnostics error numbers.

### *0001

```
NO LO?
```

Cause: The program cannot find an HP 70900B local oscillator source at row address 0.

Cure: Check and correct the HP-MSIB switches on the HP 70900B local oscillator source.

### *0002

```
HP-MSIB addr 70902
```

Cause: The HP-MSIB address of the HP 70902A IF section does not follow addressing rules.

Cure: The recommended address of the HP 70902A IF section is in row 2 and the same column as the HP 70900B local oscillator source.

### *0003

```
HP-MSIB addr 70903
```

Cause: The HP-MSIB address of the HP 70903A IF section does not follow addressing rules.

Cure: The recommended address of the HP 70903A IF section is in row 4 and the same column as the HP 70900B local oscillator source.

### *0004

```
HP-MSIB addr 70904
```

Cause: The HP-MSIB address of the HP 70904A RF section does not follow addressing rules.

Cure: The recommended address of the HP 70904A RF section is in row 6 and the same column as the HP 70900B local oscillator source.

## *0005

HP-MSIB addr 70905/6

Cause: The HP-MSIB address of the HP 70905A RF section or HP 70906A RF section does not follow addressing rules.

Cure: The recommended address of the HP 70905A RF section or the HP 70906A RF section is in row 6 and the same column as the HP 70900B local oscillator source.

## *0007

21.4MHz daisy chain

Cause: The IF Section's 21.4 MHz rear panel daisy-chain cables are incorrectly connected.

Cure: The 21.4 MHz OUT of the 70903A connects to the 21.4 MHz IN of the HP 70902A IF section. The VIDEO OUT of the HP 70902A IF section connects to the VIDEO IN of the HP 70903A IF section.

## *0008

NO RF SECTION?

Cause: The program cannot find an RF section module.

Cure: Install an RF section in the system, or correct the HP-MSIB switch settings on the currently installed RF section.

## *0009

NO I.F. SECTION?

Cause: The program cannot find an IF Section.

Cure: Install an IF Section in the system, or correct the HP-MSIB switch settings on the currently installed IF Section.

## *0010

HP-MSIB addr 70907

Cause: The HP-MSIB address of the HP 70907A/B external millimeter interface module does not follow the addressing rules.

Cure: The recommended address of the HP 70907A/B external millimeter interface module is in row 5 and the same column as the HP 70900B local oscillator source.

## *0011

No EMIM Section?

Cause: The program cannot find an HP 70907A/B external millimeter interface module.

Cure: Install an EMIM in the system, or correct the HP-MSIB switch settings on the currently installed EMIM. This error will not occur in Revision C.00.00 and later.

## *0012

`HP-MSIB addr 70600`

Cause: The HP-MSIB address of the Preselector does not follow the addressing rules.

Cure: The recommended address of the Preselector is in row 2 and the column immediately to the right of the HP 70900B local oscillator source.

## *0013

`No PRESELECTOR?`

Cause: The program cannot find a Preselector configured to the HP 70900B local oscillator source.

Cure: Install a Preselector in the system, or correct the HP-MSIB switch settings on the currently installed preselector.

## *0014

`Incorrect System`

Cause: The system selected to be tested requires modules which are not present in the system.

Cure: Select another configured system, or reconfigure your system to match the selection. This error will not occur in Revision C.00.00 and later.

## *0015

`HP-MSIB addr 70700`

Cause: The HP-MSIB address of the HP 70700A digitizer does not follow the addressing rules. The program can test the HP 70700A digitizer only when it is configured as a slave to the HP 70900B local oscillator source.

Cure: The recommended address of the HP 70700A digitizer is in row 3 and the same column as the HP 70900B local oscillator source.

## *0020

`21.4MHz input cable`

Cause: The program cannot find the rear panel 21.4 MHz input signal for the HP 70902A IF section.

Cure: Check the 21.4 MHz OUT connection on the rear panel of the RF section going to the 21.4 MHz IN connection on the rear panel of the HP 70903A IF section if present, otherwise the 21.4 MHz IN on the rear panel of the HP 70902A IF section. If this cable is connected properly, it might be defective.

## *0021

`Video output cable`

Cause: The rear panel VIDEO OUT signal from the HP 70902A IF section is not getting to the VIDEO input of the HP 70900B local oscillator source or 70903A.

Cure: Check the rear panel VIDEO OUT connection on the HP 70902A IF section. Be sure it is routed properly and the cable is not defective.

## 0022

`LC bandwidths`

Cause: The signal amplitude of the HP 70902A IF section is too low when it is set to the LC bandwidths (10 to 300 kHz).

Cure: The LC filters in the HP 70902A IF section require adjustment or repair.

## 0023

`CRYSTAL bandwidths`

Cause: The signal amplitude of the HP 70902A IF section is too low when it is set to the crystal bandwidths (10 Hz to 3 kHz).

Cure: The crystal filters in the HP 70902A IF section require adjustment or repair.

## 0024

`Problem/ampl low?`

Cause: The signal amplitude of the HP 70902A IF section is too low in both the LC and Xtal bandwidths. The program stops testing the HP 70902A IF section when this error is generated.

Cure: Check the connection at the 21.4 MHz IN on the rear panel of the HP 70902A IF section. Be sure the cable is routed correctly and is not defective. If this does not remedy the problem, the HP 70902A IF section 21.4 MHz Input Filter requires adjustment or repair.

## 0025

`Step gain amplifier`

Cause: The gain of one or more of the step gain amplifiers of the HP 70902A IF section is incorrect.

Cure: The step gain amplifiers in the HP 70902A IF section require adjustment or repair.

## 0026

`Res BW-accuracy`

Cause: The HP 70902A IF section resolution bandwidth is incorrect.

Cure: The bandwidth filter adjustments in the HP 70902A IF section should be performed. If this does not remedy the problem, repair the HP 70902A IF section LC or crystal bandwidth filters.

## 0027

`Res BW-amplitude`

Cause: The amplitude variation between the resolution bandwidths of the HP 70902A IF section is too large.

Cure: The bandwidth filter adjustments in the HP 70902A IF section should be performed. If this does not remedy the problem, repair the HP 70902A IF section LC or crystal bandwidth filters.

## 0028

`Calibration atten`

Cause: The calibration attenuator of the HP 70902A IF section is not functioning correctly.

Cure: The calibration attenuators in the HP 70902A IF section require adjustment or repair.

## 0029

`Log amplifier`

Cause: The log amplifier of the HP 70902A IF section is not functioning correctly.

Cure: Perform the HP 70902A IF section log amplifier adjustment. If this does not remedy the problem, refer to the *HP 70902A IF section Service Manual* for procedures to repair the log amplifier or replace the thick-film log amplifier microcircuits.

## *0030

`21.4MHz input cable`

Cause: The program cannot find the rear panel 21.4 MHz input signal for the HP 70903A IF section.

Cure: Check the 21.4 MHz OUT connection on the rear panel of the RF section going to the 21.4 MHz IN connection on the rear panel of the HP 70903A IF section. If this cable is connected properly, it might be defective.

## *0031

`Video output cable`

Cause: The rear panel VIDEO OUT signal of the HP 70903A IF section is not getting to the HP 70900B local oscillator source VIDEO input.

Cure: Check the rear panel VIDEO OUT connection on the HP 70903A IF section. Be sure it is routed properly to the HP 70900B local oscillator source and the cable is not defective.

## 0032

`LC board`

Cause: The HP 70903A IF section LC board signal amplitude is too low.

Cure: Perform the HP 70903A IF section LC filter adjustments or the HP 70903A IF section step gain adjustment. If these do not remedy the problem, the A1 LC filter assembly requires repair.

## 0033

`Log board`

Cause: The 70903A IF Section log board signal amplitude is too low.

Cure: Perform the HP 70903A IF section log amplifier adjustments. If this does not remedy the problem, the A2 Log Amplifier Assembly requires repair.

## 0034

`Problem/ampl low?`

Cause: The HP 70903A IF section internal 21.4 MHz IF signal amplitude is too low. The program stops testing the HP 70903A IF section when this error is generated.

Cure: Perform the HP 70903A IF section module adjustments. It is likely either the A1 LC wideband filter or A2 log amplifier/power supply requires repair.

## 0035

`Step gain amplifier`

Cause: The gain of the step gain amplifier of the HP 70903A IF section is incorrect.

Cure: The step gain amplifiers in the HP 70902A IF section require adjustment or repair.

## 0036

`Res BW-accuracy`

Cause: One or more of the HP 70903A IF section resolution bandwidths are not the correct value.

Cure: The bandwidth filter adjustments in the HP 70903A IF section should be performed. If this does not remedy the problem, repair the HP 70903A IF section LC bandwidth filters.

## 0037

`Res BW-amplitude`

Cause: The amplitude variation between the HP 70903A IF section resolution bandwidths is too large.

Cure: The bandwidth filter adjustments in the HP 70903A IF section should be performed. If this does not remedy the problem, repair the HP 70903A IF section LC bandwidth filters.

## 0038

`Calibration atten`

Cause: One or more of the calibration attenuators of the HP 70903A IF section are not functioning correctly.

Cure: The calibration attenuators in the HP 70903A IF section require adjustment or repair.

## 0039

`Log amplifier`

Cause: The log amplifier of the HP 70903A IF section is not functioning correctly.

Cure: Perform the HP 70903A IF section log amplifier adjustment. If this does not remedy the problem, refer to the *HP 70903A IF section Service Manual* for procedures to repair the log amplifier.

## 0040

`Tune+Span`

Cause: The Tune + Span level is incorrect or the system cable is missing.

Cure: Check to ensure the Tune + Span cable is connected from the HP 70900B local oscillator source LO to all modules that require it. SMB tee adapters may be required to daisy-chain this signal.

## 0041

`RF attenuator`

Cause: The HP 70907A/B external millimeter interface module internal attenuator is not functioning correctly.

Cure: Test and, if necessary, replace the HP 70907A/B external millimeter interface module input attenuator.

## *0042

`Cal/I.F. cables?`

Cause: The front panel CALIBRATOR output of the HP 70900B local oscillator source is not connected to the RF INPUT of the RF section (a prerequisite for running the program), or the rear panel 21.4 MHz output of the RF section is not connected to the IF Section.

Cure: The marker reading was less than −60 dBm and the RF section 21.4 MHz diagnostic detector indicated a low signal condition. This could be caused by no calibrator signal applied to the RF section input, no 21.4 MHz cable connected to the RF section rear panel 21.4 MHz output, or a defective RF section. Check for these conditions to remedy the problem.

## *0043

`Problem/ampl low?`

Cause: The signal amplitude of the RF section is too low. The marker reading was less than −20 dBm but greater than −60 dBm and the RF section 21.4 MHz diagnostic detector indicated a low signal condition. The program stops testing when this error is generated.

Cure: This could be caused by no 21.4 MHz cable connected to the RF section rear panel 21.4 MHz output, or excessive loss in the signal path of the RF section. Check for these conditions to remedy the problem.

## 0044

`Low/high band switch`

Cause: The low/high band switch of the RF section is not functioning correctly.

Cure: This error occurs when a signal is detected in one setting of the high-low band coaxial switch but not the other. This switch is the most likely cause of this error. Test and replace if necessary.

## 0045

`RF attenuator`

Cause: The RF attenuator of the RF section is not functioning correctly.

Cure: Test and replace the RF Attenuator if necessary

## 0046

`Step gain amplifier`

Cause: The gain of the step gain amplifier of the HP 70908A RF section is incorrect. This error occurs if the 10 dB step gain amplifier in the HP 70908A RF section fails its test.

Cure: This amplifier is located in the last converter assembly of the HP 70908A RF section. The last converter assembly should be tested and repaired as required.

## 0050

`Res BW -- CF`

Cause: The resolution bandwidth center frequency of one or more of the 70902A IF Sections is out of adjustment.

Cure: Perform the HP 70902A IF section Resolution Bandwidth Filter adjustments.

## 0051

`Res BW -- CF ampl`

Cause: The resolution bandwidth of one or more of the HP 70902A IF sections is out of adjustment.

Cure: Perform the HP 70902A IF section Resolution Bandwidth Filter adjustments.

## 0052

`Res BW -- CF ampl`

Cause: The resolution bandwidth center frequency of one or more of the HP 70903A IF sections is out of adjustment.

Cure: Perform the HP 70903A IF section Resolution Bandwidth Filter adjustments.

## 0053

`Res BW -- CF ampl`

Cause: The resolution bandwidth of one or more of the HP 70903A IF sections is out of adjustment.

Cure: Perform the HP 70903A IF section Resolution Bandwidth Filter adjustments.

## 0060

`RF attenuator`

Cause: The RF attenuator of the HP 70600A preselector or the HP 70601A preselector is not functioning correctly.

Cure: Check and replace the RF Attenuator in the HP 70600A preselector or HP 70601A preselector.

## 0061

`Cannot test 70905/6B`

Cause: These RF sections can only be tested with an associated HP 70600A preselector or an HP 70601A preselector, as part of a preselected microwave spectrum analyzer system.

## 0062

`Cal input incorrect?`

Cause: The front panel CALIBRATOR output of the HP 70900B local oscillator source is not connected to the RF INPUT of the system being tested. (This is a prerequisite for running the program.)

Cure: This error indicates that the marker reading of the signal was less than −60 dBm and the 21.4 MHz diagnostic detector indicated a low signal condition. Check that the calibrator signal from the HP 70900B local oscillator source is connected to the RF Input of the RF section or the preselector. If the calibrator is connected, check the RF signal path in the RF section for excessive loss.

## 0063

`ATTENUATOR Section`

Cause: One or more of the RF attenuator sections in the HP 70600A preselector or the HP 70601A preselector is not functioning correctly.

Cure: Check and replace the RF Attenuator in the HP 70600A preselector or HP 70601A preselector.

## 0064

RF Switch 1

Cause: This RF switch in the HP 70600A preselector or the HP 70601A preselector is not functioning properly.

Cure: Check A3S1 and replace if required.

## 0065

RF Switch 2

Cause: This RF switch in the HP 70600A preselector or the HP 70601A preselector is not functioning properly.

Cure: Check A4S2 and replace if required.

## 0066

RF Switch 3

Cause: This RF switch in the HP 70600A preselector or the HP 70601A preselector is not functioning properly.

Cure: Check A5S3 and replace if required.

## 0067

RF Switch 4

Cause: This RF switch in the HP 70600A preselector or the HP 70601A preselector is not functioning properly.

Cure: Check A6S4 and replace if required.

## 0068

RF Switch 1

Cause: The HP 70620 or HP 70621 has failed its switch diagnostic #1. If the preamplifier is an HP 70620A preamplifier, S4 or its associated drive circuitry has failed. If the preamplifier is an HP 70620B preamplifier or an HP 70621A preamplifier, K1 or its associated drive circuitry has failed.

Cure: Troubleshoot and replace the failed component if necessary.

## 0069

RF Switch 2

Cause: The HP 70620A preamplifier has failed its switch diagnostic #2. This indicates S1 or its associated drive circuitry has failed. This error applies to the HP 70620A preamplifier only.

Cure: Troubleshoot and replace the failed component if necessary.

## 0070

`RF Preamplifier`

Cause: The HP 70621A preamplifier or HP 70620B preamplifier Option 001 RF preamplifier has failed its diagnostic test. This error will occur if the signal level gain through the RF preamplifier path at 300 MHz is less than or equal to 0 dB.

Cure: The most likely failure is the RF preamplifier microcircuit. Troubleshoot and repair this component and its power supply.

# Operating Errors 2000 – 2999

Operating errors occur when the spectrum analyzer is operated incorrectly.

## 2000

`No errors`

Cause: This message is returned from querying the system when no error is present in the system.

## 2001

`Illegal command`

Cause: The remote command sent over the bus or executed as part of a DLP was not a legal remote command. This error could also occur if a User Variable (VARDEF), which did not exist, was used as a parameter in a remote command. Check for missing terminators, and the proper number of parameters. Also verify that delimited strings have are properly ended.

Cure: Use the DEBUG command to locate the programming error. Refer to the DEBUG command description in the *HP 70000 Modular Spectrum Analyzer Programming Manual*.

## 2002

`Illegal parameter`

Cause: This is a user-generated system protocol error.

## 2003

`Missing parameter`

Cause: The command being executed requires more parameters than were provided, or a user variable VARDEF used as a parameter for a function was not found.

Cure: Use the DEBUG command to locate the programming error. Refer to the *HP 70000 Modular Spectrum Analyzer Programming Manual*.

## 2004

`Illegal character`

## 2005

`Illegal character set`

## 2006

`Parm out of range`

Cause: A change was made to an instrument setting that was beyond the capabilities of the hardware. This could be remote, DLP, or front panel changes.

Cure: Use the DEBUG command to locate the programming error. Refer to the *HP 70000 Modular Spectrum Analyzer Programming Manual*.

## 2007

`Missing terminator`

## 2008

`Output unleveled`

## 2009

`Protocol error`

Cause: Internal error due to illegal communication. Due to hardware failure.

Cure: Please document all details possible that lead up to the error and contact your HP representative

## 2010

`Cmd out of sequence`

Cause: Internal error due to process synchronization. Possible hardware failure.

Cure: Please document all details possible that lead up to the error and contact your HP representative.

## 2011

`Memory overflow`

Cause: There is not enough available memory for the operation. Examples would be adding a VARDEF, FUNCDEF, or ACTDEF sending AMPCOR data adding new modules to a system that was almost out of memory because of FUNCDEF's, and so forth

Cure: Some items must be removed from memory. Analyze DLP's to see if there are extra characters (spaces, and so forth) that could be removed. Expanded memory options for the Local Oscillator are also available.

## 2011

`A Hardware Selected`

Cause: This is notification that a service mode has been enabled. The system is overriding the automatic configuration and operating as if the hardware is the "A" version of the HP 70900B local oscillator source LO module.

Cure: The power must be cycled to restore the automatic mode.

## 2012

`B Hardware Selected`

Cause: This is notification that a service mode has been enabled. The system is overriding the automatic configuration and operating as if the hardware is the "B" version of the HP 70900B local oscillator source LO module.

Cure: The power must be cycled to restore the automatic mode.

## 2013

`Item not found` or `XXXXX not found`

The `XXXXX` will be replaced by the name of the item that was not found.

Cause: A request was made to operate on an item in memory that was not located.

Cure: Use the DEBUG command to locate the programming error. Refer to the *HP 70000 Modular Spectrum Analyzer Programming Manual.*

## 2014

`Duplicate identifier`

Cause: A variable, trace, or DLP name matches a reserved spectrum analyzer command.

Cure: Use the DEBUG command to locate the programming error. Refer to the *HP 70000 Modular Spectrum Analyzer Programming Manual.*

## 2015

`Too many entries`

Too many user definitions

Cause: More entries have been made in an internal table then was reserved. The most common time this will occur is having too many entries in the Limit Line Table.

Cure: Use the LIMILINE command to allocate more space for limit line entries.

## 2016

`Label too long`

Cause: A user generated key label that has more than 14 characters, or a FUNCDEF, VARDEF, or ACTDEF with more than 12 characters will generate this error.

Cure: The system will truncate the text to the correct number of characters and execute the requested function. Use the DEBUG command to locate the programming error. Refer to the *HP 70000 Modular Spectrum Analyzer Programming Manual.*

## 2018

`State protected`

Cause: This error occurs if a user stored instrument state that is protected was requested to be removed from memory. The state will not be removed. Also, if the number of user states is reduced using NSTATE, all states above the requested number will be deleted. If any of those states were protected, the NSTATE command will be ignored and this error will occur.

Cure: Unprotect any states no longer needed.

## 2019

`Illegal marker type`

Cause: The command executed does not apply to the marker mode of the markers on the display. For example, if a normal marker is on screen, and the "Marker delta into span" function is activated, the function cannot be executed, and the error will occur.

Cure: Refer to the programming or operation manual for the function being executed to determine the proper marker type for the operation.

## 2020

`No active marker`

Cause: This error occurs when Marker Delta is moved to Center Frequency Step Size (MKSS) while no markers are active.

## 2021

`Bad IF/ENDIF nesting`

Cure: Use the DEBUG command to locate the programming error. Refer to the *HP 70000 Modular Spectrum Analyzer Programming Manual*.

## 2022

`REPEAT/UNTIL error`

Cure: Use the DEBUG command to locate the programming error. Refer to the *HP 70000 Modular Spectrum Analyzer Programming Manual*.

## 2023

`Illegal Cal signal`

Cause: Calibration signal did not match.

## 2024

`Illegal HP-MSIB comm`

Illegal HP-MSIB communication

Cause: An HP-MSIB protocol violation has occurred.

Cure: Document all steps leading up to the error condition and contact your HP representative.

## 2025

`System error (slave)`

Cause: HP-MSIB communications with a slave module has created this error.

Cure:

- Record the error number and the hexadecimal code.
- Record all events that led up to the occurrence of the error message.
- Record the HP model numbers of the modules in the system.
- Record the firmware version.

- Contact the nearest HP Sales and Service Office for assistance.

### 2026

`Check mixer bias`

### 2027

`Service mode -- do IP`

Cause: This is a user-generated system protocol error. The bandwidth or reference select is not in their AUTO modes. (For service use only.)

### 2028

`Idler is unlocked`

### 2029

`Command syntax error`

Cause: This error is generated when MSIB packet syntax is incorrect, or when a BDLP call is does not have the proper syntax.

Cure: Please document all the steps that led up to this error and contact your HP representative.

### 2030

`Scaling overflow`

Cause: The user has requested a scale factor that is too large in the DWINDOW command.

Cure: Refer to the DWINDOW command description in the *HP 70000 Modular Spectrum Analyzer Programming Manual* for limits.

### 2031

`Too many errors`

Cause: The error buffer has been filled.

### 2032

`Hardware not present`

Cause: A function was requested that required hardware not available in the system.

Cure: Use the DEBUG command to locate the programming error. Refer to the *HP 70000 Modular Spectrum Analyzer Programming Manual.*

## 2033

`Single band only`

Cause: The SIGID command requires that the trace be in a single microwave band.

Cure: Adjust the start or the stop frequency so that the trace does not span more than a single band.

## 2034

`Test switch on`

Cause: The module test switch is in the "test" position. All RAM is erased at each power cycle.

Cure: Set the module test switch to the "normal" position.

## 2035

`Illegal operation`

## 2036

`HP-IB multiple cntlr`

Cause: A DLP used an OUTPUT command or the spectrum analyzer attempted to access the disk when another device had control of the HP-IB.

Cure: Remove the other device from the HP-IB.

## 2037

`No instr resp`

Cause: No HP-IB instrument response from an OUTPUT command or mass storage (such as SAVE or RECALL) to an HP-IB disk.

Cure: Verify that the HP-IB address is correct.

## 2038

`Span÷trace too large`

Cause: There are too few data points for the span requested.

Cure: Reduce the span or increase the number of trace points.

## 2039

`User stack overflow`

Cause: There is not enough RAM space remaining for the operation requested. Often nested DLPs are calling too deeply. For example, DLP "A" calls DLP "B" which calls DLP "C", and so forth.

Cure: DLP program should be redesigned using fewer nesting levels.

### 2040

`Partial USTATE data`

Cause: A recalled user state is not complete.

### 2041

`CAL POWER lvl err`

CAL power level error

Cause: The calibration signal level is not sufficient for system calibration.

Cure: Increase the signal level. −10 dBm is optimum.

### 2042

`Not stored, A−X->A on`

Cure: Use the DEBUG command to locate the programming error. Refer to the *HP 70000 Modular Spectrum Analyzer Programming Manual*.

### 2043

`LINEAR not allowed`

Cure: Use the DEBUG command to locate the programming error. Refer to the *HP 70000 Modular Spectrum Analyzer Programming Manual*.

### 2044

`Not stored: open 1st`

Cause: The data for the short is entered before the data for the open when normalizing for swept response.

Cure: Store the data for the open first. Refer to the STORREF command.

### 2045

`HP-IB bus error`

Cause: HP-IB protocol violation.

Cure: Verify cables and computer for proper operation.

### 2046

`No DAC in this band`

Cause: There is no preselector in the current band.

Cure: Verify the start and stop frequencies and see the manual for operation ranges.

## 2047

`Preselector disabled`

Cause: The preselector was bypassed while the peak command was executed.

Cure: Select the preselector path before executing the peak command.

## 2048

`Userdef protected`

Cause: User-defined function or (USER) key is protected.

Cure: Use the DEBUG command to locate the programming error. Refer to the DEBUG command description in the *HP 70000 Modular Spectrum Analyzer Programming Manual.*

## 2049

`Battery failed`

Cause: The battery backed up RAM was not valid.

Cure: Return to Hewlett-Packard for servicing.

## 2050

`Ampcr/span too large`

Amplitude-correction data too large

## 2051

`File not found`

Cause: A user state was not found in memory.

Cure: Check the state number or name.

## 2052

`File already exists`

## 2053

`storage device`

## 2054

`write protect`

Cause: Mass storage device is write protected.

### 2055

`bad file`

Cause: File can not be read.

### 2056

`bad revision`

Cause: A recalled state is from a different firmware revision and cannot be used.

### 2057

`volume full`

Cause: The mass storage device is full.

Cure: Remove some files from the mass storage device.

### 2058

`bad volume`

### 2059

`directory full`

Cause: The directory of the mass storage device is full.

Cure: Remove some files from the mass storage device.

### 2060

`New 70810 ROMs req`

Cause: This LO firmware revision requires the latest HP 70810B lightwave section firmware to make lightwave measurements.

### 2802

`Illegal in LW mode`

Cause: The last command sent to the HP 70810B lightwave section is legal in bypass mode only.

Cure: Change the HP 70810B lightwave section to the bypass mode before using this command.

### 2803

`Illegal in bypass`

Cause: The last command sent to the HP 70810B lightwave section is legal in lightwave mode only.

Cure: Change the HP 70810B lightwave section to the lightwave mode before using this command.

## Hardware Warning Errors 6000 – 6999

Hardware-warning errors occur when the hardware is faulty. The spectrum analyzer can still make measurements, but the accuracy of the measurement cannot be guaranteed.

### 6000

`EAROM unprotected`

Cause: The memory-enable write switch is set to the WRITE position. It is not set to the PROTECT position.

Cure: Set the memory-enable write switch to the PROTECT position.

### 6001

`Confidence test passed`

### 6002

`A6 RAM checksum (battery)`

### 6003

`FFS won't tune low`

### 6004

`FFS won't tune high`

### 6005

`Idler tuning range`

### 6006

`YTO tuning range`

### 6007

`MSIB NMAA received`

HP-MSIB "no module at address" received

Cause: The module attempted to establish communication with a module at an incorrect address. The system responded with an NMAA (no module at address).

Cure: If using MSIB communication, verify the address if the module you are trying to communicate with is correct. Otherwise, document all steps that led to the error condition and contact your HP representative.

## 6008

`Confidence test failed`

## 6009

`No module label`

## 6010

`Err in MDOC response`

Cause: An error in module-output capabilities response has occurred.

Cure: Return to Hewlett-Packard for servicing.

## 6011

`RBW hardware error`

Resolution bandwidth hardware error

Cause: The resolution bandwidth filters were not able to be calibrated.

Cure: Return to Hewlett-Packard for servicing.

## 6012

`Gain hardware error`

Cause: The amplifiers were not able to be calibrated.

Cure: Return to Hewlett-Packard for servicing.

## 6013

`LOGAMP hardware error`

Cause: The log amplifiers were not able to be calibrated.

Cure: Return to Hewlett-Packard for servicing.

## 6014

`PLL error`

Phase-lock loop is unlocked and/or the loop-tuning voltage is near its limit. The internal or external frequency reference source is not close enough to 1, 2, 5, or 10 MHz for the HP 70310A precision frequency reference to operate, or a hardware failure exists.

## 6015

`Oven cold`

The HP 70310A precision frequency reference's Oven/Oscillator assembly has not reached normal operating temperature of approximately 85° C, and there is no external frequency reference applied. If the error appears at power-up when the instrument has been off for more than fifteen minutes and then disappears after the instrument has been on for fifteen to twenty minutes, the most probable causes are:

- the external power pack has an open fuse

- the external power pack is not properly connected
- the external power pack is faulty
- the HP 70310A precision frequency reference module has faulty hardware

**Note** At ambient temperatures below the specified operating range of the module, the oven may not be able to generate enough power to keep itself at approximately 85° C.

## 6016

`freq reference`

No internal oven/oscillator is present and no external frequency reference is applied.

## 6017

`6214 GHz error`

## 6018

`PGA gain sum high`

## 6019

`PGA gain sum low`

## 6802

`Invalid cal data`

Cause: The EAROM data installed during the manufacturing process may not be valid.

Cure: Return to Hewlett-Packard for servicing.

## 6805

`Firmware Changed`

Cause: The HP 70810B lightwave section firmwave version is of a different date code than was installed in the module the last time it was turned on. All optical power calibration data previously stored by the user in module memory has been lost.

Cure: Perform a calibration on the HP 70810B lightwave section.

# Hardware Broken Errors 7000 – 7999

Hardware-broken errors occur when the spectrum analyzer might have faulty hardware.

## 7000

ROM Check error

Cause: The programmed checksum of the ROM does not agree with the computed checksum.

Cure: This could only be caused by a hardware failure. Return to Hewlett-Packard for servicing.

## 7001

LO unleveled

## 7002

First LO unleveled

## 7003

Second LO unlocked

## 7004

300 MHz error

## 7005

321.4 MHz error

## 7006

21.4 MHz error

## 7007

Cal error

Calibration error.

## 7008

FFS handshake

Fractional-frequency-source handshake error

Cause: Communication has been lost to the Frequency Synthesizer portion of the 70900 module. This is very likely due to a hardware failure.

Cure: Return to Hewlett-Packard for servicing.

## 7009

`ROM 2 check error`

## 7010

`FFS is unlocked`

Fractional-frequency-source is unlocked

Cause: The frequency synthesizer is not able to acquire phase lock. If an external frequency reference is being used, verify that the frequency is accurate. If not, it is likely that the LO hardware has failed.

Cure: Correct external frequency reference accuracy or return to Hewlett-Packard for servicing.

## 7011

`125 KZ to FFS`

125 kHz to fractional frequency source error

Cause: The internal 125 kHz reference signal is not at the correct power level on the Fractional Frequency Synthesizer assembly. This error will only occur on power up of the system, or when the TEST command is invoked, either from the front panel or remotely.

Cure: Return to Hewlett-Packard for servicing.

## 7012

`Cannot lock YTO`

Cannot lock YIG-tuned oscillator

Cause: The Local Oscillator cannot acquire phase lock. If an external frequency reference is being used, verify that the frequency is accurate. If not, it is likely that the LO hardware has failed or is in need of calibration.

Cure: Verify the external reference frequency is operating correctly. If it is, return the LO module to Hewlett-Packard for servicing.

## 7013

`Can't finetune YTO`

Cannot fine-tune YIG-tuned oscillator

Cause: The Local Oscillator cannot be adjusted for proper operation. Module service or calibration is required.

Cure: Return to Hewlett-Packard for servicing.

## 7014

`12.5 MZ to YTO LK BD`

12.5 MHz to YIG-tuned oscillator lock board error

Cause: The internal 12.5 MHz reference signal is not at the correct power level on the YTO phase lock board. This error will only occur on power up of the system, or when the TEST command is invoked, either from the front panel or remotely.

Cure: Return to Hewlett-Packard for servicing.

## 7015

`YTO unleveled` YIG-tuned oscillator unleveled

Cause: The leveling amplifier for the Local Oscillator output is not able to generate the proper output level. This error will only occur on power up of the system, or when the TEST command is invoked, either from the front panel or remotely.

Cure: Return to Hewlett-Packard for servicing.

## 7016

`YTO is unlocked`

YIG-tuned oscillator is unlocked

Cause: During a sweep of the local oscillator, phase lock was lost. If an external frequency reference is being used, its accuracy should be verified.

Cure: Verify external reference accuracy. If no external reference is being used, module service or calibration is necessary. Return to Hewlett-Packard for servicing.

## 7017

`External ref (100 MZ)`

External 100 MHz reference error

Cause: The detector used to automatically switch between an internal and external reference is not operating properly. This error will only occur on power up of the system, or when the TEST command is invoked, either from the front panel or remotely.

Cure: Return to Hewlett-Packard for servicing.

## 7018

`50 MZ to sampler`

50 MHz to sampler error

Cause: The internal 50 MHz sampler drive signal is not at the correct power level at the sampler. This error will only occur on power up of the system, or when the TEST command is invoked, either from the front panel or remotely.

Cure: Return to Hewlett-Packard for servicing.

## 7019

`300 MZ post fltr det`

300 MHz post-filter detector error

Cause: The internal 300 MHz reference signal is not at the correct power level after the filter stage. This error will only occur on power up of the system, or when the TEST command is invoked, either from the front panel or remotely.

Cure: Return to Hewlett-Packard for servicing.

## 7020

`300 MZ AGC`

300 MHz automatic gain control error

Cause: The gain control voltage on the 300 MHZ signal has reached a limit. This error will only occur on power up of the system, or when the TEST command is invoked, either from the front panel or remotely.

Cure: Return to Hewlett-Packard for servicing.

## 7021

`600 MZ doubler level`

600 MHz doubler level error

Cause: The 600 MHz internal reference signal amplitude is not correct. This error will only occur on power up of the system, or when the TEST command is invoked, either from the front panel or remotely.

Cure: Return to Hewlett-Packard for servicing.

## 7022

`Low idler range`

Cause: The internal "Idler" oscillator did not acquire phase lock at the low end of its operating range. This error will only occur on power up of the system, or when the TEST command is invoked, either from the front panel or remotely.

Cure: Return to Hewlett-Packard for servicing.

## 7023

`High idler range`

Cause: The internal "Idler" oscillator did not acquire phase lock at the high end of its operating range. This error will only occur on power up of the system, or when the TEST command is invoked, either from the front panel or remotely.

Cure: Return to Hewlett-Packard for servicing.

## 7024

`Tune DAC` Tune the digital-to-analog converter

Cause: The DAC that tunes the YIG oscillator is not operating properly. This error will only occur on power up of the system, or when the TEST command is invoked, either from the front panel or remotely.

Cure: Return to Hewlett-Packard for servicing.

## 7025

`Decade span atten`

Decade spanwidth attenuator error

Cause: The DAC that generates the scaled voltage for sweeping the YIG oscillator is not operating properly. This error will only occur on power up of the system, or when the TEST command is invoked, either from the front panel or remotely.

Cure: Return to Hewlett-Packard for servicing.

## 7026

`Binary span atten`

Binary span width attenuator error

Cause: The DAC that scales the tune voltage to sweep the YIG oscillator is not operating properly. This error will only occur on power up of the system, or when the TEST command is invoked, either from the front panel or remotely.

Cure: Return to Hewlett-Packard for servicing.

## 7027

`Sweep dac`

Digital-to-analog converter sweep error

Cause: The DAC that generates the system sweep ramp is not operating properly. This error will only occur on power up of the system, or when the TEST command is invoked, either from the front panel or remotely.

Cure: Return to Hewlett-Packard for servicing.

## 7028

`Correction dac`

Correction digital-to-analog converter

Cause: The DAC that fine tunes the phase lock circuit for the EYO is not operating properly. This error will only occur on power up of the system, or when the TEST command is invoked, either from the front panel or remotely.

Cure: Return to Hewlett-Packard for servicing.

## 7029

`Video proc: 0 volt`

Video processor: 0 volt error

Cause: The video processor is not able to be properly calibrated to the 0 volt reference. This error will only occur on power up of the system, or when the TEST command is invoked, either from the front panel or remotely.

Cure: Return to Hewlett-Packard for servicing.

## 7030

`Video proc: 2 volt`

Video processor: 2 volt error

Cause: The video processor is not able to be properly calibrated to the 2 volt reference. This error will only occur on power up of the system, or when the TEST command is invoked, either from the front panel or remotely.

Cure: Return to Hewlett-Packard for servicing.

## 7031

`Idler is unlocked`

Cause: The local oscillator is not able to acquire phase lock.

Cure: Verify an external reference if applicable, otherwise the module will need to be returned to Hewlett-Packard for servicing.

## 7032

`Oven RF error`

The HP 70310A precision frequency reference accessory oven is not providing a signal, is providing a low signal, or is providing a signal when it should not be.

## 7033

`Power supply error`

One or more of the +5 V, −12 V, or −5 V voltages are out of spec.

## 7034

`Dist amp A error`

Either the input to the HP 70310A precision frequency reference Distribution Amplifier "A" board assembly is beyond the specified operating range, or a hardware failure exists. The most probable causes are either: (a) one or more outputs are unleveled due to faulty HP 70310A precision frequency reference hardware, or (b) an input that is too low in power.

## 7035

`Dist amp B error`

Either the input to the HP 70310A precision frequency reference Distribution Amplifier "B" board assembly is beyond the specified operating range, or a hardware failure exists. The most probable causes are either: (a) one or more outputs are unleveled due to faulty HP 70310A precision frequency reference hardware, or (b) an input that is too low in power.

## 7036

`HP-MSIB error`

## 7041

`FFS won't tune low`

Fractional frequency source cannot tune low

Cause: The frequency synthesizer will not acquire lock at the lowest end of its operating range. This error will only occur on power up of the system, or when the TEST command is invoked from the front panel or remotely.

Cure: If an external frequency reference is being used, its accuracy should be verified. If the reference is good, there is a hardware failure. The module must be returned to Hewlett-Packard for servicing.

## 7042

`FFS won't tune high`

Fractional frequency source cannot tune high

Cause: The frequency synthesizer will not acquire lock at the highest end of its operating range. This error will only occur on power up, or when the TEST command is invoked, either remotely or from the front panel.

Cure: If an external frequency reference is being used, its accuracy should be verified. If the reference is good, there is a hardware failure. The module must be returned to Hewlett-Packard for servicing.

## 7043

`Freq board adjust`

Frequency-board adjust

Cause: The Frequency control board is out of calibration. This error will only occur on power up of the system, or when the TEST command is invoked, either from the front panel or remotely.

Cure: Return to Hewlett-Packard for servicing.

## 7044

`YTO tuning range`

YIG-tuned oscillator tuning range

Cause: The YIG oscillator is not able to be tuned over the necessary range. This error will only occur on power up of the system, or when the TEST command is invoked, either from the front panel or remotely.

Cure: Return to Hewlett-Packard for servicing.

## 7045

`10 MHz out error`

The HP 70310A precision frequency reference 10 MHz OUT signal is absent or too low. The most probable cause is faulty HP 70310A precision frequency reference hardware.

## 7046

`Illegal bandslct cde`

Illegal band-select code

Cause: The Internal/External Frequency reference switch was set to an illegal position

Cure: Please document all steps taken that led to this error condition and contact your HP representative.

## 7047

`RAM failure`

Cause: The RAM self test detected a failure in the system RAM.

Cure: Return to Hewlett-Packard for servicing.

## 7048

`FFS won't unlock`

Cause: The module self test tunes the synthesizer to a frequency outside it's operating range to verify the lock detector is operating properly. The synthesizer never indicated an unlock condition.

Cure: Return to Hewlett-Packard for servicing.

## 7050

`Hardware config fail`

Cause: On power up of the system a test of the hardware is made to verify the hardware matches the model revision ("A" or "B"). If this test is not conclusive, this error will occur.

Cure: If an external frequency reference is being used, verify the proper accuracy. Return to Hewlett-Packard for servicing.

## 7073

Tune+Span disconnect

## 7074

Discriminator unlock

## 7075

LOLA unleveled

## 7076

MULT unleveled

## 7077

YTF drive error

## 7078

Tune/Span error

## 7079

EEPROM check error

Cause: This hardware error occurs when the controller has determined that the EEPROM memory is invalid. Either the EEPROM is defective or the data in the EEPROM must be reloaded.

Cure: Return to Hewlett-Packard for servicing.

## 7801

Optical atten failed

Cause: The optical attenuator cannot achieve a given setting. Automatic periodic zeroing temporarily modifies the attenuator setting, so this error can occur without a user attempt to change attenuation.

Cure: Return to Hewlett-Packard for servicing.

## 7802

ADC error

Cause: The analog digital converter (ADC) in the power meter is not responding.

Cure: Return to Hewlett-Packard for servicing.

## 7803

`Power meter failed`

Cause: The power meter circuitry has failed during the self test.

Cure: Return to Hewlett-Packard for servicing.

## 7804

`Self test failed`

Cause: The self test checks the functionality of the power meter and optical attenuator.

Cure: Return to Hewlett-Packard for servicing.

## 7805

`Zeroing error`

Cause: Photodiode dark current cannot be nulled.

Cure: Check for a hardware problem such as excessive noise on the photodiode, or catastrophic failure in the power meter circuitry.

# Computation Errors 8000 – 8999

Computation errors occur during illegal math operations. For all of these computation errors, use the DEBUG command to locate the programming error. Refer to the *HP 70000 Modular Spectrum Analyzer Programming Manual*.

## 8000

`Divide by zero`

## 8001

`Float pt overflow`

Floating-point overflow. Absolute value of number exceeds $1.797,693,134,862,315 \times 10^{308}$.

## 8002

`Log of zero`

## 8003

`Log of negative`

## 8004

`Integer overflow`

Number is less than –32,768 or greater than 32,767.

## 8005

`Square root error`

## 8006

`Modulus of zero`

## 8999

`Float pt underflow`

Floating-point underflow. Number is between 0 and $\pm 2.225,073,858,507,202 \times 10^{-308}$.

## Factory-Use Only Errors 9000 – 9999

These errors are for factory use only. If any of the 9000 – 9999 errors occurs,

1. Record the error number and the hexadecimal code.
2. Record all events that led up to the occurrence of the error message.
3. Record the HP model numbers of the modules in the system.
4. Record the firmware version.
5. Contact the nearest HP Sales and Service Office for assistance.

# A

# HP-IB and System-Level Language

This appendix discusses some elementary HP-IB programming concepts, and is written for the spectrum analyzer operator with little programming experience. It is important to understand how messages move between the spectrum analyzer and the computer. All messages pass to and from the spectrum analyzer along the Hewlett-Packard Interface Bus (HP-IB). Appendix A also gives a brief introduction to system-level commands.

## HP-IB Select Code and Address

Up to 15 devices may be connected to the HP-IB interface at a time. All devices connected to a particular HP-IB interface are distinguished from each other by an HP-IB address. Similarly, each HP-IB computer interface has a select code which distinguishes it from other interfaces in the system. The spectrum analyzer is preset at the factory to have an HP-IB address of 18. For convenience, an HP-IB connector with select code 7 is provided on the rear panel of many Hewlett-Packard computers. However, interface cards are available for other select codes. (Refer to your computer manual for select code information.)

The spectrum analyzer HP-IB address may be changed with the front panel controls:

1. Press (DISPLAY) and `address map`, then turn the knob to position the rectangle around the HP 70900B local oscillator source (LO/Ctlr).
2. Press `HP-IB ADDRSET`, then enter a number using the numeric keypad and press `ENTER`.

Maximum cable length between peripherals and the computer, that is, total accumulated length, should not exceed 20 meters. (For more information, refer to *Tutorial Description of the Hewlett-Packard Interface Bus*, (HP part number 5952-0156.)

## The Enter and Output Statements

The computer sends messages to the spectrum analyzer with OUTPUT statements, and receives messages from the spectrum analyzer with ENTER statements. The enter and output statements contain the spectrum analyzer address and HP-IB select code, as illustrated with the HP BASIC commands in the following illustration.

The output statement tells the analyzer to receive a message from the computer. The enter statement tells the analyzer to send a message to the computer.

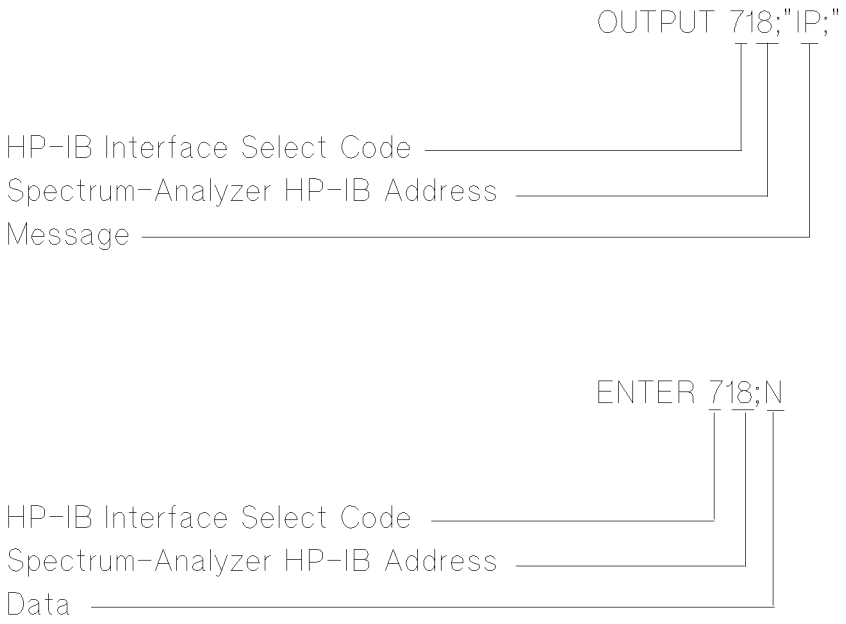


**Output and Enter Statements**

## HP-IB Status Annunciators

The HP-IB status annunciators are remote (RMT), listen (LSN), talk (TLK), and service request (SRQ).

The remote annunciator lights whenever the analyzer is under HP-IB control. The listen annunciator lights as the analyzer receives information via HP-IB. The talk annunciator lights as the analyzer sends information on HP-IB.

The service-request annunciator lights when the analyzer signals it has achieved a predefined state.

## HP-IB System-Level Commands

The state of the analyzer and the HP-IB interface are controlled by system-level commands.

The following HP-IB system-level commands clear the HP-IB bus or the devices(s) on the bus.

- *Interface-clear* (IFC) places the HP-IB system in an idle state; there is no activity on the bus. If interface-clear is executed when the analyzer or the computer is sending a message on HP-IB, transmission stops and the portion of the message not yet sent is lost. The HP BASIC command for interface-clear is `ABORT 7`.
- *Device-clear* (DCL) resets all devices on a specific HP-IB interface to a predefined state. The HP-IB interface is specified with the select code. In HP BASIC, `CLEAR 7` resets all devices on interface 7.
- *Selected-device-clear* (SDC) resets a specific device to a predefined state. In HP BASIC, `CLEAR 718`, resets the device on interface 7 at address 18.

The local and remote states of the analyzer are controlled by the following HP-IB system level commands:

- *Unlisten* (UNL) stops reception of messages by all devices on a specified HP-IB interface. Execute unlisten before addressing a particular device to guarantee that only that device is responding to a message from the controller. To activate the unlisten condition on interface 7 in HP BASIC, execute `SEND 7:UNL`.
- *Untalk* (UNT) stops the transmission of messages from all devices on a specified HP-IB interface to the controller. This command is provided for convenience since addressing one talker automatically unaddresses others. To activate the untalk condition on interface 7 in HP BASIC, execute `SEND 7:UNT`.
- *Go-to-local* (GTL) places the currently addressed device under local control. The HP-BASIC language equivalent for go-to-local is `LOCAL 718` for a device at HP-IB interface 7, address 18.
- *Local-lockout* (LLO) deactivates the front panel, local-reset key on a specified device. Thus, if local lockout is executed on any device, it cannot be returned to local control using front panel controls. After executing local-lockout, use device clear or go-to-local to return the instrument to local control. The HP BASIC language equivalent for local-lockout is `LOCAL LOCKOUT 718` for a device at HP-IB interface 7, address 18.

# B

# Spectrum Analyzer Response to System-Level Commands

The following table describes the analyzer response to system-level commands, such as HP BASIC commands.

**Table B-1. Spectrum Analyzer Response to System-Level Commands**

| Message | HP-IB Mnemonic | HP Basic Command | Analyzer Response |
|---|---|---|---|
| Data Transfer | none | `OUTPUT 718` | Enable remote. |
| System Trigger | ATN | `TRIGGER 7` | Sweep measurement range. |
| | GET | | |
| Device Trigger | ATN | `TRIGGER 718` | Sweep measurement range. |
| | UNL | | |
| | LAG | | |
| | GET | | |
| System Clear | ATN† | `CLEAR 7` | Interrupt analyzer operation*. Analyzer ready for data. |
| | DCL | | |
| Device Clear | ATN | `CLEAR 718` | Interrupt analyzer operation*. Analyzer ready for data. |
| | MTA | | |
| | UNL | | |
| | LAG | | |
| | SDC | | |
| System Remote Enable | REN | `REMOTE 7` | Enable remote. |
| | ATN false | | |
| Device Remote | REN | `REMOTE 718` | Enable remote. |
| | ATN | | |
| | MTA | | |
| | UNL | | |
| | LAG | | |

**Table B-1.**
**Spectrum Analyzer Response to System-Level Commands (continued)**

| Message | HP-IB Mnemonic | HP Basic Command | Analyzer Response |
|---|---|---|---|
| System Local | REN false<br>ATN false | `LOCAL 7` | Disable remote |
| Device Local | ATN false<br>MTA false<br>UNL<br>LAG<br>GTL | `LOCAL 718` | Disable remote. |
| System Local Lockout | ATN†<br><br>LLO | `REMOTE 718`<br><br>`LOCAL LOCKOUT 7` | Deactivate front panel. |
| Clear Local Lockout | | `LOCAL 7` or `LOCAL 718` or press (RESET) on computer | Reactivate front panel.<br>Disable remote.<br>Analyzer ready for data.* |
| Interface clear | REN<br>ATN false | `ABORT 7` | Disable listen. |

*Interrupts user-defined functions, repeat loops, on-end-of-sweep algorithms, and other functions having long execution times, such as CAL or VAVG. Otherwise, completes execution of current command.
†Must be preceded by REN.

C

# ASCII Codes, Control Codes, and Escape Characters

Table C-1 lists the American Standard Code for Information Interchange (ASCII), and also lists characters unique to the HP 70004A color display. In the table, codes 0 through 127 are ASCII. Codes 128 through 255 are the HP 70004A color display characters.

Tables C-2 through C-4 list control codes and escape characters that locate the pen, or clear or enhance text.

# American Standard Code for Information

**Table C-1.**
**ASCII Characters (Codes 0 through 127) and HP 70004A color display Characters**

| Code | Char | Code | Char | Code | Char | Code | Char | Code | Char | Code | Char | Code | Char | Code | Char |
|---|---|---|---|---|---|---|---|---|---|---|---|---|---|---|---|
| 0 | NU | 32 | | 64 | @ | 96 | ` | 128 | 0 | 160 | ÿ | 192 | ↓ | 224 | É |
| 1 | SH | 33 | ! | 65 | A | 97 | a | 129 | 1 | 161 | α | 193 | ↑ | 225 | Í |
| 2 | SX | 34 | " | 66 | B | 98 | b | 130 | 2 | 162 | β | 194 | ↓ | 226 | Ó |
| 3 | EX | 35 | # | 67 | C | 99 | c | 131 | 3 | 163 | γ | 195 | △ | 227 | Ú |
| 4 | ET | 36 | $ | 68 | D | 100 | d | 132 | 4 | 164 | δ | 196 | ▽ | 228 | á |
| 5 | EQ | 37 | % | 69 | E | 101 | e | 133 | 0 | 165 | ε | 197 | ∠ | 229 | é |
| 6 | AK | 38 | & | 70 | F | 102 | f | 134 | 1 | 166 | ζ | 198 | Ξ | 230 | í |
| 7 | BL | 39 | ' | 71 | G | 103 | g | 135 | 2 | 167 | η | 199 | Υ | 231 | ó |
| 8 | BS | 40 | ( | 72 | H | 104 | h | 136 | 3 | 168 | θ | 200 | Γ | 232 | ú |
| 9 | HT | 41 | ) | 73 | I | 105 | i | 137 | 4 | 169 | ι | 201 | Π | 233 | À |
| 10 | LF | 42 | * | 74 | J | 106 | j | 138 | I | 170 | k | 202 | Ψ | 234 | È |
| 11 | VT | 43 | + | 75 | K | 107 | k | 139 | J | 171 | λ | 203 | Φ | 235 | Ì |
| 12 | FF | 44 | , | 76 | L | 108 | l | 140 | K | 172 | μ | 204 | ∮ | 236 | Ò |
| 13 | CR | 45 | - | 77 | M | 109 | m | 141 | X | 173 | ν | 205 | ∫ | 237 | Ù |
| 14 | SO | 46 | . | 78 | N | 110 | n | 142 | i | 174 | ξ | 206 | £ | 238 | à |
| 15 | SI | 47 | / | 79 | O | 111 | o | 143 | j | 175 | o | 207 | Œ | 239 | è |
| 16 | DL | 48 | 0 | 80 | P | 112 | p | 144 | k | 176 | π | 208 | œ | 240 | ì |
| 17 | D1 | 49 | 1 | 81 | Q | 113 | q | 145 | x | 177 | ρ | 209 | Ç | 241 | ò |
| 18 | D2 | 50 | 2 | 82 | R | 114 | r | 146 | + | 178 | σ | 210 | ç | 242 | ù |
| 19 | D3 | 51 | 3 | 83 | S | 115 | s | 147 | / | 179 | τ | 211 | Ñ | 243 | Â |
| 20 | D4 | 52 | 4 | 84 | T | 116 | t | 148 | - | 180 | υ | 212 | ñ | 244 | Ê |
| 21 | NK | 53 | 5 | 85 | U | 117 | u | 149 | Ä | 181 | φ | 213 | @ | 245 | Î |
| 22 | SY | 54 | 6 | 86 | V | 118 | v | 150 | Ë | 182 | χ | 214 | ¢ | 246 | Ô |
| 23 | EB | 55 | 7 | 87 | W | 119 | w | 151 | Ï | 183 | Ψ | 215 | √ | 247 | Û |
| 24 | CN | 56 | 8 | 88 | X | 120 | x | 152 | Ö | 184 | ω | 216 | Σ | 248 | â |
| 25 | EM | 57 | 9 | 89 | Y | 121 | y | 153 | Ü | 185 | Ω | 217 | ≃ | 249 | ê |
| 26 | SB | 58 | : | 90 | Z | 122 | z | 154 | ä | 186 | ½ | 218 | ∞ | 250 | î |
| 27 | EC | 59 | ; | 91 | [ | 123 | { | 155 | ë | 187 | ¼ | 219 | ± | 251 | ô |
| 28 | FS | 60 | < | 92 | \ | 124 | \| | 156 | ï | 188 | ≤ | 220 | ÷ | 252 | û |
| 29 | GS | 61 | = | 93 | ] | 125 | } | 157 | ö | 189 | ≡ | 221 | ≠ | 253 | ∴ |
| 30 | RS | 62 | > | 94 | ^ | 126 | ~ | 158 | ü | 190 | ≥ | 222 | ¿ | 254 | ÷ |
| 31 | US | 63 | ? | 95 | _ | 127 | ▒ | 159 | Ÿ | 191 | ↑ | 223 | Á | 255 | ◊ |

**Figure C-1.**

# Control Codes and Escape Characters

Use the following codes and characters with label functions, or with any function that defines a string of text between delimiters, such as the TITLE key, or the TITLE, TEXT, KEYDEF, or ACTDEF programming commands. For an example, see the TITLE command in the *HP 70000 Modular Spectrum Analyzer Programming Manual*.

## Position the Pen, Clear or Move Text, or Beep

Enter the codes listed in Table C-2 between the delimiters for the label function.

**Table C-2. Control Codes**

| ASCII Code | Function | Description |
|---|---|---|
| 7 | beeper ($B_L$) | Sound beep. |
| 8 | back space ($B_S$) | Move pen back by one character width. |
| 12 | form feed ($F_F$) | Clear line of text, then move pen to left side of line. |
| 13 | carriage return ($C_R$) | Move pen to left side of display, to beginning of line. |
| 27 | escape ($E_C$) | Use with functions listed in Tables E-3 and E-4. |

The characters in Table C-3 must be preceded by the ASCII code for escape (27), as shown by $E_C$ in the table. Enter both the escape code and the characters between the delimiters for the label function.

**Table C-3.**
**Escape Characters that Control the Pen, Clear Text, and Scroll Text**

| Character* | Description |
|---|---|
| $E_C$C | Move pen right by one character. |
| $E_C$G | Move pen to the left side of the display (carriage return). |
| $E_C$K | Clear to the end of the line. |
| $E_C$Y | Turn on the display-function mode*. |
| $E_C$Z | Turn off the display-function mode*. |
| $E_C$& | Initiate functions listed in Table E-4. |
| *See "Display Function Mode" at end of appendix. $E_C$ indicates ASCII code for escape (27). | |

## Enhance Text

The characters in Table C-4 must be preceded by the ASCII code for escape (27) and "&" (see Table C-3). All characters and codes must be entered between the delimiters of the label function, which must be assigned a nonzero item number. (See IT programming command.)

**Table C-4. Escape Characters that Control Enhancements**

| Characters* | Description |
|---|---|
| $E_C$&dA | Turn on blinking. |
| $E_C$&dB | Turn on inverse video. |
| $E_C$&dC | Turn on inverse video and blinking. |
| $E_C$&dD | Turn on underline. |
| $E_C$&dE | Turn on underline and blinking. |
| $E_C$&dF | Turn on underline and inverse video. |
| $E_C$&dG | Turn on underline, inverse video, and blinking. |
| $E_C$&d@ | Turn off enhancements. |
| *$E_C$ indicates ASCII code for escape (27). | |

## Change Color

Pen colors are available on the HP 70004A color display, which are selected by the PEN programming command. The color that PEN selects can be overridden by executing the ASCII code for escape (27), followed by "&v", an integer, and "S" (for example, $E_C$&v10S). The escape-character sequence must be entered between the delimiters of the label function, which must be assigned a nonzero item number. (See IT programming command.)

To select the color of letters, enter an integer from 1 to 15. To select the color behind letters, enter an integer from −15 to −1. To return to the color selected by PEN, enter a 0 ($E_C$&v0S).

Colors can be selected with the escape sequence up to three times for each label. The pen colors are not available on the HP 70205A graphics display or HP 70206A system graphics displays. Sending pen-color escape sequences to the the HP 70205A graphics display or HP 70206A system graphics displays causes errors. For more information about pen numbers and colors, see the *HP 70004A Color Display User's Guide*.

## Display-Functions Mode

When the display-function mode is on, the control codes and characters are displayed in the label; their associated functions (inverse video, underlining, and so on) are not executed, with the exception of carriage return and line feed, which are executed. When the mode is off, the code and character functions are executed instead of displayed. The mode is off when a label is created. When a label is assigned a nonzero number with the IT command, the mode is on, and $E_C$Y and $E_C$Z have no effect.

# D

# Interaction of Programming Commands and Memory

The following commands consume internal memory.

ACTDEF
AMPCOR
FUNCDEF
LIMILINE
LIMISAV
LOAD
NSTATE
ONEOS
ONMENU
ONMKR
ONUSER
ONWINDOW
PDA
PDF
RCLD
READMENU
REPEAT/UNTIL
SAVES
SAVET
SAVEU
STOR
TRDEF
USERERR
USERMSG
USTATE
VARDEF

The following commands consume external memory:

LIMISAV
NSTATE
SAVED
SAVES
SAVET
SAVEU
STOR

# Glossary

**active function readout**
Area at left of screen that displays the active function and its state. The active function is determined by the last completed programming command or key function.

**active marker**
Marker which can be repositioned by programming commands or front-panel controls.

**active trace**
Trace that is being updated (swept) with incoming signal information. Only traces A, B, and C can be active. *See* **trace**.

**address, HP-IB**
*See* **HP-IB** and **address map**.

**address, HP-MSIB**
*See* **address map**.

**address map**
A modular measurement system consists of instruments. Instruments can be stand-alone instruments, such as the HP 70004A color display, or can consist of one or more modules which are plugged into a mainframe or display.

When incorporated into a system, the function of each module or stand-alone instrument is determined by its position in the system. As a visual aid, all positions are displayed on a map called the **address map**. The address map is is a grid consisting of a series of columns and rows.

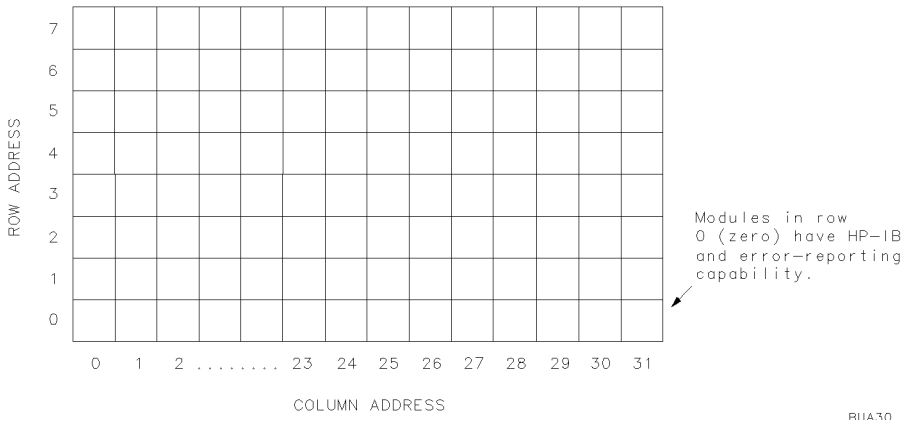


**Address Map Illustrates HP-MSIB Addresses for Row and Column.**

Any module located in row 0 can be controlled via the Hewlett-Packard Interface Bus (HP-IB), provided the module has HP-IB capability. In addition, modules or instruments in row 0 can report system errors. The local-oscillator and display modules are usually positioned in row 0 to access HP-IB and report errors.

For simplicity, stand-alone instruments and modules will be referred to as modules in the following discussion.

All modules are connected via the internal Hewlett-Packard Measurement System Interface Bus (HP-MSIB). Their relative position determines how they interact. Modules can either, (1) control other modules or, (2) be controlled by other modules.

By definition, a controlling module controls all modules in the address map that are located above and to the right, unless a second module resides to the right of the first controlling module, in the same or lower row. In this case, the territory of the controlling module ends at the column occupied by the second module. (See the shaded area of the address map.)

A controlling module is called a **master** and a controlled module is its **slave**. The address map shows two local-oscillator masters and the modules they control. The local oscillator in row 0, column 18, controls any modules in the shaded area.

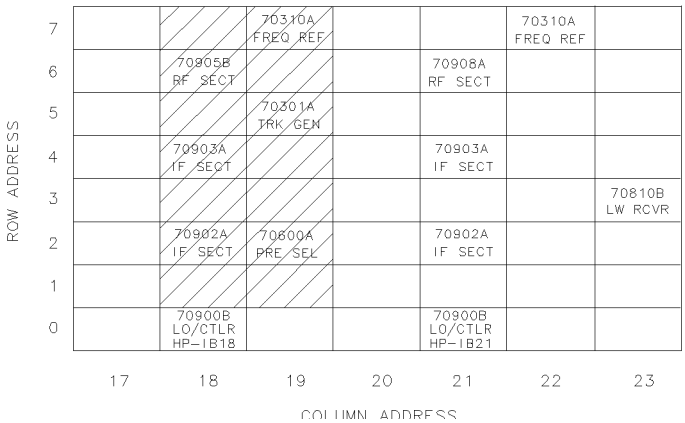


**The address map contains two multi-module instruments (spectrum analyzers) which are controlled by modules in row 0. The HP 70900B local oscillator source controls the modules in the shaded area.**

The display module is neither a master nor a slave.

All modules have an HP-MSIB address, which is defined as the row and column number where a module resides on the address map. In the address map, the HP-MSIB address of the HP 70600A preselector ("70600 A PRE SEL" in the map) is 2, 19.

HP-MSIB address 0, 31 and HP-IB address 31 are illegal.

**amplitude accuracy**

Uncertainty of the amplitude calibration of the analyzer. This uncertainty consists of several components:

- flatness of frequency response
- switching of the input attenuator
- switching between bandwidths
- IF gain of the log amplifier
- amplitude accuracy of the display and the built-in calibrator.

**amplitude-left marker**

Represents marker #2 during the relative-marker mode. The marker is positioned relative to the position of marker #1. When amplitude-left marker is displayed, marker readouts give the amplitude and frequency difference between markers #1 and #2.

**amplitude-right marker**
Represents marker #3 during the relative-marker mode. The marker is positioned relative to the position of marker #1. When the amplitude-right marker is displayed, marker readouts give the amplitude and frequency difference between markers #1 and #3.

**argument**
Command suffix which varies the function of a programming command. In the syntax diagrams, any mnemonic inside a circular envelope that follows the command name is an argument. Examples are EP (enter parameters from front-panel) and DN (step down).

**attenuation**
*See* **internal attenuation** and **external attenuation**.

**bandwidth shape factor**
Measure of how wide the spectrum-analyzer IF filter is below the 3 dB points.

Describes analyzer capability to resolve closely spaced signals of unequal amplitudes.

Shape factor is normally the ratio of the 60-dB bandwidth divided by the 3-dB bandwidth. The smaller this ratio, the sharper and more selective is the filter.

**blank mode**
The specified trace (A, B, or C) is removed from the screen and stored in **reserved memory**.

**broadband response**
Displayed on the spectrum analyzer when its bandwidth is wider than the discrete frequency components of the received impulsive signal. In this mode, each displayed response represents more than one frequency component. More specifically, each response represents a pulse that occurs every 1/PRF seconds with an amplitude proportional to the amplitude of the spectrum envelope. This occurs, for example, when the spectrum-analyzer bandwidth is wider than the pulse repetition frequency (PRF) of a pulsed transmission.

To check for broadband response, vary the spectrum-analyzer bandwidth, sweep time, or span width. A broadband response is present when any of the following conditions are met:

- Amplitude varies directly with the spectrum-analyzer bandwidth. For example, doubling the bandwidth increases the displayed amplitude by 6 dB.
- Line spacing depends on sweep time. Thus, increasing the sweep time widens the spectral line spacing.
- Span does not affect line spacing.

*See* **narrowband response**.

**character set**
Set of characters used to enter text into the **data line** or **title line**. Select a character for transfer by positioning the cursor with the step keys or knob.

**chirp**
In optical systems, chirp is the switching in optical frequency when typical laser diodes are pulsed between two different optical power levels or intensity modulated. Chirp results from an increasing drive current that either causes a higher temperature or a change in the effective index of refraction, which increases the wavelength via the change of length of the laser's resonant cavity. Chirp effectively broadens the laser's spectral bandwidth, which results in a reduced system bandwidth because of **chromatic dispersion**.

**chromatic dispersion**
Chromatic dispersion is pulse broadening due to the different velocities of different colors contained in the spectrum of the source; the pulse broadening depends directly on the spectral width of the source. Chromatic dispersion is basically a material property; it also contributes to the reduction of the bandwidth of the multimode fiber. Chromatic dispersion cannot be measured directly; instead, multimode dispersion adds quadratically to the measurement result.

**clear-write mode**
The specified trace (A, B, or C) is swept and updated each time the trigger conditions are met.

**column**
*See* **address map**.

**command**
Code that controls operation of modular measurement instruments. The local-oscillator module responds to programming commands that are described in this manual. The display responds to a different set of programming commands, which are described in documentation for the HP 70004A color display, HP 70205A graphics display, and HP 70206A system graphics display. *See* **function**.

System-level commands form the operating system for computer-controlled measurements. Examples of system-level commands are CLEAR or OUTPUT in the HP BASIC language.

**compatible functions**
*See* **function**.

**continuous sweep mode**
Active traces are swept continuously. The sweep begins each time the trigger conditions are met.

**correction factors**
Offsets applied to spectrum-analyzer circuitry to compensate for circuit errors when using a particular input port. The calibration functions can apply the offsets individually or all at once to the following parts of the spectrum analyzer:

- logarithmic amplifiers
- resolution bandwidths
- front-end circuitry
- attenuator
- step-gain amplifiers

**data line**
Area at bottom of screen for data entry, such as for the `COMMAND` and `debug` functions.

**debug mode**
Mode activated with DEBUG programming command or front-panel `debug` keys, where spectrum-analyzer commands are displayed in the **data line** as each command is executed. When a faulty command is encountered, operation of a computer program or user-defined function stops. The last characters in the data line (at the right end) form the faulty command.

**delta marker**
Second marker that is positioned relative to the position of the normal marker. When the delta marker is displayed, the marker readouts give the amplitude and frequency difference between the delta and normal (reference) markers.

**destination**
Component in syntax diagram where function results are stored.

**display line**
Horizontal line on spectrum-analyzer display that represents a specific amplitude level for trace-math functions.

**distributed-feedback (DFB) laser**
A semiconductor laser which is capable of producing a single wavelength (frequency).

**dynamic range**
Maximum power ratio of two signals simultaneously present at the input that may be measured within the limits of specified accuracy, sensitivity, and distortion.

**element**
A point that represents a fixed location on the horizontal axis of a trace. Each point contains amplitude information.

**enter statement**
Computer program line that receives data via HP-IB.

**external attenuation**
Attenuation located outside of the spectrum analyzer, before the spectrum analyzer input.

**external memory**
*See* **user memory**.

**external mixing bands**
Available frequency bands when an external mixer is connected to the spectrum analyzer.

**External Mixing Bands and Associated Mixing Harmonics**

| Band | Harmonic Number | Frequency Range |
|---|---|---|
| K | 6– | 18.0 – 26.5 |
| A | 8+ | 26.5 – 40.0 |
| Q | 10+ | 33.0 – 50.0 |
| U | 10+ | 40.0 – 60.0 |
| V | 14+ | 50.0 – 75.0 |
| E | 16+ | 60.0 – 90.0 |
| W | 18+ | 75.0 – 110.0 |
| F | 24+ | 90.0 – 140.0 |
| D | 30+ | 110.0 – 170.0 |
| G | 36+ | 140.0 – 220.0 |
| Y | 42+ | 170.0 – 260.0 |
| J | 50+ | 220.0 – 330.0 |

**extinction ratio**
The ratio of the high-level optical power to the low-level optical power in a transmission system is called the extinction ratio.

**ferrule**
A tube which contains the optical fiber. The ferrule is necessary to keep the fiber aligned.

**firmkey**
*See* **key**.

**firmware**
Read-only memory (ROM) that dictates the operating characteristics of a module. Each firmware version has an identifying date code.

The local-oscillator firmware determines the operating characteristics of the spectrum analyzer. To learn the local-oscillator firmware date code, press (MENU), Misc, MORE, service, ROM VERSION. The date code for the display firmware is displayed when the display is powered up.

**flatness**
Describes the amplitude variations corresponding to the tuning frequency of the spectrum analyzer. Flatness of ±1 dB means the maximum and minimum values of the frequency response of the spectrum analyzer are less than 2-dB apart.

**frequency stability**
Refers to the stability of the spectrum analyzer. Two measures of frequency stability are used, short term and long term. Residual frequency modulation (FM) and noise sidebands are a measure of short-term stability. Drift is a measure of long-term stability.

**FTZ**
The abbreviation for Fernmeldewesen Technischen Zentrum. This is the part of the German post office that regulates EMI (electromagnetic interference).

**function**
The spectrum analyzer and its display each contain a unique set of functions that are executed with front-panel keys and programming commands. The characteristics of these functions are determined by the firmware in the local-oscillator and display modules.

**User-defined functions** are created by the user with the FUNCDEF or ACTDEF command and may be executed with the front-panel keys after execute dlp is pressed.

User-defined functions are stored in **internal memory** and remain permanently unless they are altered or erased by PARTIAL ERASE or certain programming commands, such as the FORMAT, LOAD, PURGE, DISPOSE, PERASE, ERASE, ACTDEF, RCLD, or FUNCDEF command.

**Compatible functions** are programming commands that have the ability to operate on other analyzer commands, called **predefined functions**.

*See* **firmware**, **user memory**, and **reserved memory**.

**gain compression**
Condition where change in spectrum-analyzer response is not directly proportional to change in input-signal level. By definition, gain compression occurs when the change in spectrum-analyzer response is less than the change of the input-signal level by a specific amount, usually 1 dB.

**graphics window**

Alternate coordinate system for display of stored trace data or custom graphics, as defined by the DWINDOW programming command. *See* **instrument window**.

**harmonic distortion**

Occurs when the input signal is of sufficient amplitude to create harmonics (distortion) of the input signal which appear as signals on the display even though they are not actually present at the spectrum-analyzer input.

The amplitude of harmonic-distortion products is dependent on the signal levels at the spectrum-analyzer input and the mixer characteristics. Not all harmonic-distortion products may be visible. To test a response for harmonic distortion, attenuate the input signal by 10 dB while watching the display. For each 10-dB change of attenuation, the amplitude of true responses decreases 10 dB, while the amplitude of harmonic-distortion responses decreases by multiples of 10 dB. Thus, second-order responses decrease 20 dB for each decrease of 10 dB at the input. Third-order responses decrease 30 dB, etc.

**harmonic mixing**

A technique that extends the frequency range of the spectrum analyzer. A response is displayed when the input signal satisfies the following equation:

$$F_{in} = N \times F_{LO} + F_{IF}$$

where

$F_{in}$ is frequency of input signal
$F_{LO}$ is frequency of the spectrum-analyzer local oscillator
$F_{IF}$ is first IF frequency of the spectrum analyzer
N is the harmonic number of the analyzer local oscillator

Thus, mixing with the harmonics of the local oscillator extends the spectrum-analyzer frequency range to higher and higher frequencies.

**Frequency Ranges and Corresponding Harmonic Numbers**

| | Band/Range | Harmonic Number and Sign of IF |
|---|---|---|
| **Internal Mixing - HP 71210C** | 2.9 – 6.2 | −1 |
| | 6.0 – 12.7 | −2 |
| | 12.5 – 19.9 | +3 |
| | 19.7 – 22.0/26.5 | +4 |
| **Internal Mixing - HP 71200C** | 2.9 – 6.2 | −1 |
| | 6.0 – 12.8 | −2 |
| | 12.6 – 22.0 | −4 |
| **External Mixing - HP 70907A** | K 18.0 – 26.5 | +6 |
| | A 26.5 – 40.0 | +8 |
| | Q 33.0 – 50.0 | +10 |
| | U 40.0 – 60.0 | +10 |
| | V 50.0 – 75.0 | +14 |
| | E 60.0 – 90.0 | +16 |
| | W 75.0 – 110.0 | +18 |
| | F 90.0 – 140.0 | +24 |
| | D 110.0 – 170.0 | +30 |
| | G 140.0 – 220.0 | +36 |
| | Y 170.0 – 260.0 | +42 |
| | J 220.0 – 330.0 | +50 |

**HP BASIC language system**

Forms the computer operating system that exercises the program examples in this manual.

**HP-IB**

Hewlett-Packard Interface Bus. Supports IEEE-488 and IEC-625, which are worldwide standards for instrument interfaces. Accessed at rear-panel of computer and all HP-IB controlled peripherals (disk drive, printer, plotter, spectrum analyzer, and so on).

Up to 15 devices may be connected to the HP-IB interface at a time. All devices connected to a particular HP-IB interface are distinguished from each other by an HP-IB address. Similarly, each HP-IB computer interface has a select code which distinguishes it from other interfaces in the system. The spectrum analyzer is preset at the factory to have an HP-IB address of 18. For convenience, an HP-IB connector with select code 7 is provided on the

rear panel of many Hewlett-Packard computers, including the HP 9000 Series 200 and 300 computers.

**HP-MSIB**
*See* **address map**.

**IF feedthrough**
Since the spectrum analyzer is a heterodyne receiver, an input signal equal in frequency to the first IF lifts the entire baseline, regardless of the frequency-control settings. This phenomenon known as IF feedthrough obscures the display and can completely submerge other signals present. To eliminate any gap in the analyzer frequency coverage, an alternate IF with appropriate filtering must be available and the two IFs must not be harmonically related. A preselector also eliminates IF feedthrough.

**input number**
Input ports (for measuring input signals) are numbered consecutively starting with 1.

**instrument window**
Portion of screen dedicated as the display for a modular measurement system instrument. Size of window is determined by `ASSIGN WINDOW` (press DISPLAY to access it) or IWINDOW programming command. *See* **graphics window**.

**interferometer**
See **Mach-Zehnder interferometer (MZI)**.

**internal attenuation**
Attenuation located inside the spectrum analyzer, after the RF INPUT.

**internal memory**
*See* **user memory**.

**item**
A series of programming commands which form a shape for repeated graphics applications. Created with the IT command.

**key**
Spectrum-analyzer functions are accessed by front-panel keys. The keys surrounding the graticule are called **softkeys** and access all the spectrum-analyzer functions. Commonly used functions can be executed with the keys on the instrument keypad, located beneath the display on some models, such as the HP 70004A Display.

Any group of keys that can be accessed at one time form a menu. Menus are organized in levels. The highest-levels are accessed with the USER, MENU, or DISPLAY keys.

**limit line**
A limit line is a test limit consisting of a series of line segments positioned according to frequency and amplitude in the spectrum-analyzer measurement range. Two limit lines can be defined, one for the upper limit, another for the lower limit. Once defined, trace data can be compared to the limit lines as the spectrum analyzer sweeps. When the trace data exceeds the upper or lower limits, the spectrum analyzer beeps or returns test results to the computer.

**limit-line file**
User-memory file that contains limit-line table entries. When recalled with `recall to...` or LOAD programming command, limit-line table is cleared and contents of file are loaded into the limit-line table. *See* **limit line**.

**limit-line table**
Table reserved for entry of limit-line parameters. *See* **limit line**.

**linear input level**
Maximum input-signal level where gain compression does not occur. *See* **gain compression**.

**linear mode**
Displays measurement results in linear amplitude scale. The bottom of the screen equals zero volts. During linear mode, the amplitudes of measured signals are from 0 to 10,000 measurement units. *See* **measurement units**.

**linewidth**
Linewidth refers to the spectral bandwidth of an individual mode (line) of the cavity modes of a laser diode.

**LO feedthrough**
Response that occurs when the first local-oscillator (LO) frequency is equal to the first intermediate frequency (IF). In Hewlett-Packard spectrum analyzers, the LO feedthrough represents 0 Hz on the horizontal axis of the graticule.

**LO emission**
The first local-oscillator energy that passes through the input mixer and any filters, then out of the spectrum-analyzer RF input port.

**logarithmic mode**
Displays measurement results in logarithmic scale. The amplitudes of measured signals are from −32,768 to +32,767 measurement units. *See* **measurement units**.

**Mach-Zehnder interferometer (MZI)**
In classic optics, Mach-Zehnder interferometers are constructed for collimated (open) beams. They are typically used for the measurement of the refractive index of an unknown material. In fiber optics, MZIs consist of fibers and couplers. In both cases, optical radiation is split into two branches; one branch is manipulated, and then the two branches are recombined. In the process of recombination, the electric fields produce variable optical interference which is then analyzed. The fiber-optic MZI can be used to measure the linewidth of single-frequency lasers.

**marker**
Bright dot on trace used for reading information about the trace without having to compare the trace to the graticule.

**marker tracking**
Spectrum-analyzer function that maintains the marked position of an active trace at the center frequency, regardless of span setting. Activated by the MKTRACK programming command or `SIG TRK On Off`.

**master**
*See* **address map**.

**maximum input level**
Input damage level of the spectrum-analyzer front-end. Two figures are usually specified. One is the burnout level of the mixer and the other is the damage level of the input attenuator. For example, −4 dBm may be the mixer burnout level and +30 dBm the damage level for the input attenuator. *See* specifications in the *HP 70000 Modular Spectrum Analyzer Installation and Verification Manual*.

From a measurement standpoint, the maximum input level is the signal level into the input mixer which maximizes the difference between the signal level and the spectrum-analyzer

generated distortion products, or is the displayed average noise level for the given resolution bandwidth, whichever is greater.

**measurement units**
Unit for storage of trace information in trace arrays (that is, traces A, B, and C and any **user-defined traces**). For logarithmic trace information, a measurement unit is one hundredth of a dBm:

$$[\text{value in dBm}] \times 100 = \text{measurement units}$$

For linear trace information, measurement units are defined as 0 (zero) for the bottom of the display, and 10,000 for the top (reference level).

The measurement-unit range is restricted to integers between −32,768 and +32,767. Since measurement units are restricted to integers, −10.115 dBm equals −1012 measurement units, *not* −1011.5 measurement units.

**memory**
*See* **user memory** and **reserved memory**.

**memory card**
**External memory** where the contents of **internal memory** can be stored. *See* **user memory**. Available on HP 70004A color display.

**menu**
Group of keys that can be accessed at one time and are displayed simultaneously at one or both sides of the graticule. *See* **key**.

**message area**
Information area at the right of the display graticule where operation messages are displayed, such as "UNCAL" (uncalibrated) and "UNCOR" (uncorrected). Status-byte register is set whenever a message appears in message area.

**narrowband response**
Displayed on spectrum analyzer when the analyzer bandwidth is narrow enough to resolve the discrete frequency components of the received signal. For example, since the individual spectral components of a pulsed RF transmission are spaced at the pulse repetition frequency (PRF), the spectrum analyzer displays a narrowband response when its bandwidth is narrower than the PRF.

To be sure that all components are resolved regardless of their relative amplitudes, the spectrum-analyzer bandwidth should be less than 0.3 times the PRF.

To check for narrowband response, vary the spectrum-analyzer bandwidth, span width, or sweep time while watching the responses on the analyzer screen. A narrowband response is present when any of the following conditions are met:

- Amplitude of a response does not change as the bandwidth is varied.
- Widening the span width decreases spacing between spectral lines.
- Sweep-time changes do not affect spectral line spacing.

*See* **broadband response**.

**noise sidebands**
Measure of the spectrum-analyzer spectral purity. This specification is significant during spectral purity measurements when the analyzer must be more spectrally pure than the signals it measures in order to attain enough resolution. Noise sidebands are specified in dB relative to the carrier (dBc), in a specific bandwidth.

**normal marker**
Active marker that describes point on trace in absolute terms.

**normal marker mode**
Active marker is positioned in absolute terms of frequency or time. Marker readout shows the amplitude and frequency at the marker position, except during **zero span mode**, where the time value of the active marker position is indicated instead of frequency.

**numerical aperture (NA)**
Numerical aperture and the core diameter determine how much power can be launched into the multimode fiber. The numerical aperture is the sine of half the maximum angle of acceptance.

**optimum resolution bandwidth**
Bandwidth which provides the most convenient display commensurate with span width and reasonable sweep time.

**output statement**
Computer program line that sends data via HP-IB.

**parameter units**
Standard scientific unit. In its preset state, the analyzer returns to the computer all measurement results in parameter units:

**Parameter Units**

| Measured Data | Fundamental Units |
|---|---|
| Frequency | Hertz |
| Power | dBm |
| Ratio | dB |
| Voltage | Volt |
| Time | Second |
| Current | Ampere |
| Impedance | Ohm |

**peak detection mode**
Method of selecting values from continuous amplitude values detected.

**PIN photodetector**
The PIN photodetector is the most important detector type due to its simiplicity, stability, and bandwidth. Its principle of operation is that whenever the energy of an entering photon is comparable to the band gap energy of the material, the photon energy is absorbed and an electron-hole pair is generated in the i-zone (intrinisic zone, a zone of low conductivity) of the photodetector. An ideal photodetector with negligible recombination would generate one electron-hole pair per photon.

**position units**
Describes the position of a point along the horizontal axis of a trace. The point at the left end of the trace has a position-unit value of *1*. The point at the right end of a 800-point trace has a position-unit value of *800*.

**predefined functions**
Subset of analyzer programming commands that can be used as sources for another subset of analyzer commands, called **compatible functions**. *See* **function**.

**predefined trace**
*See* **trace**.

**predefined variable**
*See* **variable**. *Also see predefined variable* in Table 2-2.

**prefix**
Letters that precede the file number specified by the `save to...` keys. Used to identify contents of file in **user memory**. The default prefixes are listed below:

- A state-register file has an "s_" prefix.
- A limit-line file has an "l_" prefix.
- A program file has a "d_" prefix.
- A (USER)-key file has a "u_" prefix.
- A trace file has "t_" prefix.

Use `CHANGE PREFIX` or the PREFX programming command to change the prefix by inserting characters to the left of the underscore (_).

**preselector**
Bandpass filter that passes the desired signal to the spectrum-analyzer input. A tracking preselector is a voltage-tuned bandpass filter (typically 20 – 50 MHz) which tracks the analyzer tuning and is used with harmonic-mixing spectrum analyzers to eliminate image, multiple, and spurious responses.

**preselector DAC**
Digital-to-analog converter that controls the preselector tracking and affects amplitude accuracy.

**program file**
User-memory file stored in external memory only. The file contains user-defined variables, traces, functions, or limit lines. When recalled with `recall to...` or LOAD programming command, file contents are stored in **internal memory** or **reserved memory**. *See* **user-defined variable**s, **user-defined traces**, **user-defined functions**, and **limit line**.

**$P_1$, $P_2$**
Points that indicate the lower left and upper right corners of a coordinate system, for graphics purposes. Can apply to prints or plots on peripheral devices. Also indicates the lower left and upper right corners of the instrument window, where measurement results are displayed. *See* **graphics window** and **instrument window**.

**query**
Any spectrum-analyzer programming command ending with a question mark (?). A query returns information to the computer. Programming is described in the Programming Fundamentals chapter.

**reference level**
During normal operation, the reference level is the top graticule line and represents an absolute amplitude value. When present, arrows to the right and left of the graticule indicate an alternate reference level position. During stimulus-response measurements, the reference level may instead represent a 0 dB level where no power is lost or reflected. *See* **relative-amplitude scale**.

**reference marker**
Reference for active marker when delta, relative-left, or relative-right marker has been activated. Active-marker position, amplitude, and frequency are relative to the reference marker.

**reference number**
All modules have a reference number, which is used by certain programming commands, such as INPUT MOD. *See* INPUTMOD command description in the Language Reference chapter.

**referenced graphics**
Graphics that are defined with the item command, IT.

**relative-amplitude scale**
*See* **stimulus-response mode**.

**relative intensity noise (RIN)**
The measurement of relative intensity noise describes the laser's maximum available amplitude range for signal modulation and serves as a quality indicator of laser devices.

RIN is a ratio of the mean-square optical-intensity noise to the square of the average optical power:

$$RIN = \frac{<\Delta P^2>}{P^2}\ dB/Hz$$

where

$<\Delta P^2>$ is the mean-square optical-intensity fluctuation (in a 1 Hz bandwidth) at a given frequency and P is the average optical power.

The ratio of optical powers squared is equivalent to the ratio of the detected electrical powers. Thus, RIN can also be expressed as follows:

$$RIN = \frac{N_{\text{elec}}}{P_{\text{AVG(elec)}}}\ db/Hz$$

where

$N_{elec}$ is the power spectral density of the photocurrent at a specific frequency and $P_{AVG(elec)}$ is the average power of the photocurrent.

**relative-marker mode**
The active marker is positioned relative to the position of the reference marker. Marker readout shows amplitude, frequency, or time difference between the two markers.

**reserved memory**
Area reserved for storage of measurement results (traces A, B, and C), configuration information, and selections made with front-panel keys or programming commands. Stored items include

- Instrument settings
- Predefined variables
- Predefined traces (A, B, and C)
- Correction factors
- Limit-line-table contents
- Current menu of (USER) keys
- Power-on state

*See* **user memory**.

**residual FM**

Short-term measure of analyzer jitter or aberrations and is usually measured in a specific bandwidth, specified as so many hertz in one second (rms, peak, peak-to-peak or average). The narrowest useful resolution bandwidth and span are limited by the residual frequency modulation (FM).

**residual responses**

Responses which are displayed when no input signal is connected to the spectrum analyzer. These ever-present responses occur when the local-oscillator fundamental or its harmonics mix with a response of another internal oscillator fundamental or harmonic to produce signals at one of the IF frequencies of the analyzer.

**resolution bandwidth**

The filter width 3 dB below the maximum response of an IF filter; the 3-dB bandwidth of the analyzer final IF stage. By definition, two closely spaced, equal amplitude signals are just resolved if they are separated by an amount equal to the 3-dB bandwidth of the resolution filters. For example, a final IF bandwidth of 100 Hz just resolves two equal amplitude signals 100 Hz apart. However, if the two signals are less than 100 Hz apart, they are within the IF bandwidth at the same time and, therefore, appear as one signal.

**responsivity**

The responsivity of a detector is the ratio of its output current to the incident optical power. The responsivity of an amplified lightwave converter is the ratio of its output voltage to the incident optical power.

**Rosenfell algorithm**

Algorithm that translates the video signal as seen at the envelope detector from analog information, that is, continuously changing amplitude values, into digital information comprising a series of finite data points. The translation process divides the analog information into intervals, then chooses a value from each interval as the data point (element). The result is a combination of positive- and negative-peak detection, where the minimum value detected in one interval is displayed alternately with the maximum value detected in the previous two intervals. Signals that occur within the interval are displayed, even if they occur within an interval that displays the minimum value. Thus, broadband or impulsive signals less than an interval wide are captured and displayed.

The Rosenfell algorithm provides a display that resembles the analog display of older spectrum analyzers.

**row**

*See* **address map**.

**scan (frequency span) linearity**

Accuracy of the horizontal axis as shown on the display. The frequency error between two points on the graticule.

**sensitivity**

Measure of analyzer capability to detect small signals. Like most receivers, the maximum sensitivity of the analyzer is limited by its inherent average noise. Thus, an unknown signal can be detected when the signal power equals inherent average noise power:

[Signal power + inherent average noise power] ÷ inherent average noise power = 2

When viewed on the display, the signal appears about 3 dB above the inherent average noise level.

Referenced to the analyzer input, the inherent average-noise level has two components, thermal noise and noise resulting from the active elements:

$$P_{in} = 10\log KTB + N_o$$

where

$P_{in}$ is inherent average noise, in dBm
K is Boltzmann's constant, in joules
T is absolute temperature, in °K
B is equivalent IF bandwidth, in Hz
$N_o$ is analyzer noise figure (the contribution of the active elements) in dB.

From this definition, we can see that the inherent average noise is bandwidth dependent. Because of the power relationship above, a decade decrease in bandwidth results in 10-dB-lower noise level and consequently 10-dB-better sensitivity. When measuring inherent average noise level, a video filter with a bandwidth much less than the IF bandwidth should be inserted into the output circuit and the analyzer input should be terminated with its characteristic impedance.

**service-request mask**
*See* **status-byte register**.

**signal resolution**
Ability of the analyzer to resolve two real signals present at its input. Closely spaced signals are more difficult to resolve than widely spaced signals. Several factors, such as the final IF bandwidth and the shape factor, affect resolution. *See* **resolution bandwidth** and **bandwidth shape factor**.

**single-sweep mode**
Spectrum analyzer sweeps once on demand when trigger conditions are met. Each sweep is initiated by pressing `SINGLE SWEEP` or executing TS or FETCH programming command.

**slave**
*See* **address map**.

**softkeys**
Keys that surround the display area.

**source**
Components in syntax diagram on which function operates.

**span**
Equals the stop frequency minus the start frequency and determines the calibration of the horizontal axis of the spectrum analyzer.

**spectrum analyzer**
The spectrum analyzer presents the energy distribution of a signal as a function of frequency. Typically, measurement results are displayed in a coordinate system where the X and Y axis represent frequency and amplitude, respectively. The modular spectrum analyzer, however, can operate and store measurement results without a display.

There are two types of spectrum analyzers, real-time and nonreal-time. A real-time spectrum analyzer is tuned to the entire spectrum at once. Thus, it responds to changes in signals as they occur. A nonreal-time analyzer, also known as a scanning analyzer, is tuned to a single frequency at a given instant in time. So, to analyze several signals it sequentially scans through them one at a time. Because it must wait to tune to a particular frequency, it is not a real-time analyzer and the phenomenon under test must be repetitive or it may not be detected. Scanning analyzers are usually the superheterodyne receiver type in which the first local oscillator (LO) or some IF is swept. Hewlett-Packard modular spectrum analyzers are superheterodyne receivers with a swept first LO.

**spurious response**
Undesired response that is generated in the analyzer and displayed on the graticule. There are two types, harmonic and non-harmonic. Harmonic spurious responses are second, third, fourth, and so on, harmonics of the input signal. Non-harmonic spurious responses are intermodulation and residual responses. *See* **residual responses**.

**start frequency**
Beginning of measurement range.

**state-register file**
Area in **user memory** reserved for the storage of measurement results and associated analyzer settings.

**status-byte register**
Eight-bit byte that tells whether the following conditions have occurred:

- A service request has been generated.
- The analyzer has sensed a hardware or operator-usage error.
- A programming command has been executed and its operation has been completed.
- The measurement range has been swept (measured).
- The analyzer is prepared to sweep again.
- The analyzer is displaying a message in the message area on the right side of the screen (for example, "UNCAL" or "UNCOR").

Whenever a condition is satisfied, the analyzer sets the corresponding bit in the status byte true (to 1). This way, the operation of the analyzer can be monitored by a computer program with the use of the RQS or STB programming command.

The service-request mask defines the analyzer state that generates a computer service request. The mask is a copy of the status byte. When the value of the status byte matches the value of the mask, a service request is generated. (The value of bit 6 has no effect.)

**Spectrum-Analyzer Status-Byte Register**

| Bit Number | Decimal Equivalent | Spectrum-Analyzer State | Description |
|---|---|---|---|
| 7 | 128 | | Unused. |
| 6 | 64 | RQS | Set when status-byte register bit and corresponding bit in service-request mask are true. Indicates service-request has occurred. |
| 5 | 32 | ERROR PRESENT | Set when error register contains an error. |
| 4 | 16 | COMMAND COMPLETE | Set at completion of command execution. |
| 3 | 8 | | Unused |
| 2 | 4 | END OF SWEEP | Set at completion of sweep. |
| 1 | 2 | MESSAGE | Set when message appears, such as UNCAL (uncalibrated), UNCOR (uncorrected), or power bar zeroing. |
| 0 | 1 | TRIGGER ARMED | Set when analyzer is ready to receive a sweep trigger. |

**step keys**
Front-panel controls, ▲ and ▼, that increase or decrease the active function value by a predetermined value. In the syntax diagrams, the UP and DN arguments simulate the pressing of the step keys.

**steps**
Increment of change effected by the front-panel step keys, ▲ and ▼, and the UP and DN programming-command arguments.

**stimulus-response mode**
Analyzer is configured to make stimulus-response measurements. The stimulus-response mode is available in analyzer systems containing a tracking generator and is activated with the `STM RSP On Off` key or MEASURE programming command.

Displays measurement results in relative-amplitude scale, in dB. Thus measurement results represents a variation, plus or minus, from a reference which is usually stored in a trace.

**stop frequency**
End of measurement range.

**sweep time**
Total time duration of one full sweep.

**system-level command**
*See* **command**.

**threshold**
Level on display. Signals below the threshold are not displayed. Use `THRESHLD On Off` or TH programming command to set the threshold level.

**title line**
Area near top of screen reserved for display of text with TITLE or TITLE programming command.

**top level keys**
Group of keys accessed by pressing the (USER), (MENU), or (DISPLAY) keys. *See* **key**.

**trace**
Array made up of a series of data points that contain amplitude information.

Traces A, B, and C are the predefined traces. Pressing (INSTR PRESET) or TRACE PRESET gives traces A, B, and C 800 points each. All three traces can be swept. *See* **active trace**.

The user-defined traces are created and stored in **internal memory** with the TRDEF programming command. The amplitude values in user-defined traces remain permanently in **internal memory** unless they are altered or erased with certain programming commands, such as math commands (ADD), or PURGE, LOAD, STOR, RCLD, DISPOSE, ERASE, FORMAT, or PERASE. They are also erased with PARTIAL ERASE. *See* **user memory**

**trace window**
Trace window that contains a weighting algorithm used for fast Fourier transforms. The fast-Fourier transform function (FFT) ideally operates on an infinitely long series of data. Since this is not practical, the weighting algorithm in the trace window is used to modify the contents of a trace array before transforming, so that its endpoints gradually reduce to zero amplitude. The TWNDOW programming command supplies three predefined trace windows. The FFT programming command executes the Fourier-transform function.

**tracking error**
Difference between the tracking generator output frequency and the analyzer tuning. This error affects the accuracy of tracking-generator measurements and should be adjusted to as small a value as possible. The TRACKNG ADJUST or TRACKNG PEAK key or SRCTK programming command adjusts tracking error.

**tracking generator**
Produces a signal that tracks the spectrum-analyzer frequency tuning. In addition to the standard analyzer applications, the spectrum-analyzer/tracking-generator system determines the frequency response of unknown devices and precisely measures the frequency of unknown signals with a frequency counter.

**tracking preselector**
*See* **preselector**.

**UNCAL**
Prompt (uncalibrated) that appears when instrument settings affect accuracy of measurement results to the degree that they no longer meet specifications. Set instrument settings (for example, RB, VB, ST, SP) to automatic or change their values appropriately to remove the prompt.

**UNCOR**
Prompt (uncorrected) that appears when correction factors are not applied to measurement results, indicating they might not meet specifications. To apply correction factors, execute CAL. Also see description for CALCOR command.

**units**
*See* **measurement units**, **parameter units**, and **position units**.

**user-defined functions**
*See* **function**.

**user-defined traces**
*See* **trace**.

**user-defined variable**
*See* **variable**.

**(USER)-key file**
User-memory file that contains a menu of (USER) keys. When recalled with `recall to...` or LOAD programming command, the current menu of (USER) keys is erased and replaced with the contents of the file.

**user memory**
Memory is an area where information can be stored for future recall. Memory that is available for the user is called **user memory**. User memory has three locations:

- **Internal memory** located within the spectrum analyzer.
- **External memory** located on HP-IB, such as a disc drive.
- **External memory** located on HP-MSIB, such as the **memory card** in the HP 70004A color display.

Various types of articles can be stored in **user memory**. The articles can be divided into two types, ASCII and non-ASCII.

**Catalog of User Memory**

| Stored Article | Storing and Recalling Commands | File Type | Default File Prefix |
|---|---|---|---|
| State-register file (Instrument settings and title-line) | STOR, SAVES, LOAD, RCLS | ASCII | s_ |
| Program file* | STOR, SAVED | ASCII | d_ |
| Trace file | STORE, SAVET, RCLT, LOAD | ASCII | t_ |
| (USER) keys file | STOR, LOAD, RCLT, SAVET | ASCII | u_ |
| Limit-line file | STOR, LOAD, LIMISAV, LIMIRCL | ASCII | l_ |
| User-defined trace† | TRDEF, LOAD, RCLD | TRACE | none |
| User-defined variable† | VARDEF, LOAD, RCLD | VAR | none |
| User-defined function † | FUNCDEF, LOAD, RCLD | FUNC | none |
| Active user-defined function † | ACTDEF, LOAD, RCLD | AFUNC | none |
| On-end-of-sweep algorithm† | ONEOS, RCLD | ONEOS | none |
| Trace-amplitude correction offsets† | AMPCOR | AMPCOR | none |

* Indicates article can be stored in external memory only.

† Indicates article can be stored only in internal memory with programming commands.

The non-ASCII articles are unique to the internal operation of the spectrum analyzer. These articles include user-defined variables and traces, which can be used for operations with

predefined variables and traces that represent the spectrum-analyzer key settings and measurement results.

The ASCII-type articles are files which can be stored in either internal or external memory. Notice that one of the files, the program file, stores the non-ASCII articles. When a program file is recalled, it is loaded into internal memory so that the non-ASCII articles can be used for data processing or other operations internal to the spectrum analyzer.

Use the mass-storage-interface command, MSI, or the `catalog & MSI` keys to select the desired user memory. When power is applied to the spectrum analyzer, internal memory is selected until the MSI command or the `INTRNL MEMORY`, `HP-IB DISK`, and `HP-MSIB DSK & CRD` keys selects another storage device.

Press (MENU), `Misc`, `catalog & MSI`, to inspect memory contents. Use the PURGE, DISPOSE, FORMAT or PERASE command *with care* to erase contents of user memory.

---

**Note** User memory can contain special routines that configure the (USER) keys with useful functions, such as scalar measurement keys or service diagnostic keys. PERASE and FORMAT erase *all* unprotected user memory. See PROTECT command for memory-protection instructions.

---

*See* "Memory" in the Programming Fundamentals chapter.

**user state**
Refers to state of all analyzer parameters that are determined by the user. These include

- All instrument settings (for example, center frequency, plotter parameters, length of trace A)
- Adjustable preset-conditions (for example, active input port when power is applied)
- Contents of **internal memory** (for example, user-defined traces)

*See* **reserved memory**.

**variable**
An alpha character from 1 to 12 characters long, representing a numeric value stored in the analyzer.

Predefined variables exist permanently in **reserved memory** and their values constantly change as the spectrum analyzer sweeps or changes its state. Examples of predefined variables are CF (center frequency) and MKA (marker amplitude). User-defined variables are created by the user with the VARDEF command and remain in **internal memory** until they are cleared with certain commands, such as PURGE or DISPOSE. A temporary variable is created by the ACTDEF command and stored in **internal memory**. This temporary variable can be used like a predefined variable. *See* **user memory**.

**video bandwidth**
Determines amount of video filtering. *See* **video filter**.

**video filter**
Post-detection averaging device which averages the noise present in the spectrum analyzer. A noise averaging filter is a low-pass filter whose bandwidth should be much narrower than the resolution bandwidth of the analyzer. Since the video filter is located after the IF (resolution) filters, it does not affect frequency resolution.

In some measurements, like AM, FM and pulsed RF demodulation, the video-filter bandwidth should be equal to or greater than the IF (resolution) bandwidth to pass the

demodulated waveform without distortion. Thus, measurement flexibility requires the analyzer to have wideband as well as narrowband video filters.

**video trigger**
Triggering mode where the analyzer sweep is synchronized to the envelope of the RF input signal. Recovers modulation during zero span mode.

**view mode**
The sweeping of the specified trace (A, B, or C) is suspended and the trace is displayed on the analyzer screen.

**wavelength**
Wavelength ($\lambda$) is the distance between two equal phase points (one complete wave) on a signal. The wavelength is equal to the phase velocity (the speed of light traveling in a dielectric material divided by the refractive index of the dielectric material) divided by the frequency.

**window**
*See* **graphics window**, **instrument window**, and **trace window**.

**xnoise**
A programmable external noise source drive for noise-figure measurements. Toggles 28 Vdc to a "Noise Source Drive" connector on the front panel of an HP 70620B preamplifier or HP 70621A preamplifier.

**zero span mode**
In this mode, the horizontal axis is calibrated in time and represents a single frequency. Thus, the analyzer is a tunable, variable bandwidth receiver. Amplitude variations of the signal amplitude versus time are displayed.

# Index


**1**

10 MHz out error, hardware broken error, 7045, 3-32
125 KZ to FFS, hardware broken error, 7011, 3-26
12.5 MZ to YTO LK BD, hardware broken error, 7014, 3-27

**2**

21.4MHz daisy chain, diagnostics error, 0007, 3-3
21.4 MHz error, hardware broken error, 7006, 3-25
21.4MHz input cable, diagnostics error, 0020, 3-4
21.4MHz input cable, diagnostics error, 0030, 3-6

**3**

300 MHz error, hardware broken error, 7004, 3-25
300 MZ AGC, hardware broken error, 7020, 3-28
300 MZ post fltr det, hardware broken error, 7019, 3-28
321.4 MHz error, hardware broken error, 7005, 3-25
321.4 MHz IF port
  to external device, 2-126
3.6 V lithium battery, nonvolatile memory, 1-56
3-D
  horizontal trace, 2-522
  trace, 2-520
  vertical trace, 2-524

**5**

50 MZ to sampler, hardware broken error, 7018, 3-27

**6**

600 MZ doubler level, hardware broken error, 7021, 3-28
6214 GHz error, hardware warning error, 6017, 3-24

**A**

A6 RAM checksum (battery), hardware warning error, 6002, 3-22
abort, 1-48
ABORT, command, 1-48, 1-51, A-2
A+B▶A, APB command, 2-40
absolute
  ABS command, 2-8
  limit line values, 2-215
  value, store, 2-8
ACCEPT VALUE, command, 1-17
accuracy criteria, change, 2-363
achieving best accuracy, 1-39
ACTDEF, command; consume internal memory, D-1
activate
  full measurement range, 2-148
  input port, 2-175
  last segment of limit line, 2-203
  next limit-line segment, 2-213
activating
  and modifying items, 1-88
  a user-defined function, 1-4
active
  function, ACTDEF command, 2-9
  function, readout, 2-160
  marker position at a peak (or pit) on the trace, 2-296
  parameter, ACTPARM command, 2-13
active trace
  blank display of, 2-538
  conditions, presetting, 2-541
  return status of, 2-542
Active-Trace Processing Functions
  AMB, A−B▶A On Off, 2-22
  AMBPL, A−B+DL On Off, 2-26
  AMC, A−C▶A On Off, 2-28
  AMETER, AMETER ON OFF, 2-30
  AMPCOR, AMPCOR On Off, 2-31
  APB, A+B▶A, 2-40
  AT, ATTEN AutoMan, 2-43
  AUNITS, units menu, 2-45
  AXB, A XCH B, 2-49
  BLANK, BLANK A, 2-53
  BML, B-DL▶B, 2-56
  BXC, B XCH C, 2-59

CLRW, CLEAR WRT A, 2-78
CORTOLIM, lim ⟷ ampcor, 2-88
COUPLE, COUPLNG AC DC, 2-89
DET, DETECTR AutoMan, 2-98
INZ, INPUT IMPED, 2-179
LG, LOG dB/DIV, 2-198
LIMIAMP, AMPTD VALUE, 2-200
LIMIBEEP, BEEPER On Off, 2-202
LIMIBOT, LAST SEGMENT, 2-203
LIMIDEL, DELETE ALL, 2-204
LIMIDONE, No Menu Key, 2-205
LIMIEDIT, enter limit, 2-206
LIMIFREQ, FREQ VALUE, 2-208
LIMIHALF, UPPER/LOWER, 2-210
LIMILINE, enter limit, 2-211
LIMINEXT, NEXT SEGMENT, 2-213
LIMIRCL, RECALL LIMIT or `LOAD FILE`, 2-214
LIMIREL, RELATIVE On Off, 2-215
LIMISAV, SAVE LIMIT, 2-216
LIMISCRL, No Menu Key, 2-217
LIMISDEL, DELETE SEGMENT, 2-218
LIMISEG, enter limit, 2-219
LIMITEST, LIMITS On Off, 2-221
LIMITYPE, type, 2-223
LIMTOCOR, lim ⟷ ampcor, 2-224
LINES, LINES On Off, 2-225
LN, LINEAR, 2-228
MIL, MAX IN AutoMan, 2-256
MINH, MIN HOLD A, 2-260
ML, MAX MXR LEVEL, 2-317
MXMH, MAX HOLD A, 2-334
PERSIST, PERSIST On Off, 2-386
PREAMP, PREAMP On Off, 2-397
RLPOS, REF LVL POSN, 2-442
RL, REF LVL, 2-440
ROFFSET, AMP REF OFFSET, 2-445
TRA/TRB/TRC, No Menu Key, 2-530
TRDEF, LENGTH A, 2-535
TRDSP, VIEW (A,B,C) BLANK (A,B,C), 2-538
TRPRSTTRPST, TRACE PRESET, 2-541
TRSTAT, No Menu Key, 2-542
USRPWR, USR PWR On Off, 2-554
VAVG, VID AVG On Off, 2-562
VIEW, VIEW A, 2-566
ADAPBTL, A◀A*DL/(A+B), 2-15
`ADC error`, hardware broken error, 7802, 3-33
ADC, presetting analog to digital converter, 2-367
"ADC trig delay range", error, 2-540
additional timing commands, 1-22
address
of system configuration, 2-86
setting the HP-IB address, 1-9
address map
to view, 1-7, 1-8
adjust tracking of
preselector, 2-395
source output, 2-484
source output, automatically, 2-486
A*DL/(A+B+C)▶A, ADAPBPCTL command, 2-14
A*DL/(A+B)▶A, ADAPBTL command, 2-15
A*DL/B▶A, ADBTL command, 2-16
A*DL/C▶A, ADCTL command, 2-19
`A Hardware Selected`, operating error, 2011, 3-14
ALC EXT IN, 2-469
American Standard Code for Information, C-2
A−B+DL▶A, AMBPL command, 2-26
(A−B)−C+DL▶A, AMBMCPL command, 2-25
(A−B)−C▶A, AMBMC command, 2-24
A−B▶A, AMB command, 2-22
(A−C)+DL▶A, AMCPL command, 2-29
A−C▶A, AMC command, 2-28
AMPCOR, command; consume internal memory, D-1
`Ampcr/span too large`, operating error, 2050, 3-20
amplitude
accuracy, improving, 2-395
analyze distribution of signals by, 2-374
correction data, 2-224
levels, compute sum of, 2-507
levels, compute sum of the square, 2-509
measurements, offsetting value of, 2-445
modulate source output, 2-470
of limit-line segment, 2-200
units, AMPU command, 2-33
units, AUNITS command, 2-45
variation of trace, reducing, 2-562
variations, trace reduce on, 2-463
amplitude correction
AMPCOR command, 2-31
data to limit lines, 2-88
system specific, 2-512
to limit lines, CORTOLIM command, 2-88
to store, 1-56
analog-to-digital converter, 2-17
analyze distribution of signals
by amplitude, 2-374
by frequency, 2-376
annotation
turn annotation on/off, ANNOT command, 2-39
turn off all display, ANNOFF command, 2-38

argument, syntax, 2-1
ASCII-decimal format trace data, 2-513
assign
  input/output path, 1-18
  item numbers, 1-87
  label to (USER) key, 2-192
  number to graphics commands, 2-187
  user-defined function to (USER) key, 2-192
ASSIGN 718, command, 1-18
asterisk (*), error messages, with an, 3-2
attenuation, 2-44
  input signal, 2-43
  optical, 2-354
  source output level, 2-473
ATTENUATOR Section, diagnostics error, 0063, 3-10
automatically
  adjust tracking of source output, 2-486
  bias external mixer, 2-238
average
  AVG command, 2-47
  computing, 2-47
avoiding LO feedthrough, 2-130
avoiding truncation of data, 1-35

**B**

bad file, operating error, 2055, 3-21
Bad IF/ENDIF nesting, operating error, 2021, 3-16
bad revision, operating error, 2056, 3-21
bad volume, operating error, 2058, 3-21
Bandwidth Functions
  AMPCOR, AMPCOR On Off, 2-31
  CAL, CAL ALL, 2-60
  CALCOR, cal enable, 2-61
  CALFREQ, FREQ FOR CAL, 2-63
  CALPWR, POWER FOR CAL, 2-65
  CALSRC, CAL SRC INT EXT, 2-67
  CORTOLIM, lim ⟷ ampcor, 2-88
  LIMTOCOR, lim ⟷ ampcor, 2-224
  PRSDAC, PRESEL DAC, 2-404
  RB, RES BW AutoMan, 2-419
  RBR, RB/SPAN RATIO, 2-421
  SYSCOR, SYS COR On Off, 2-512
  USRPWR, USR PWR On Off, 2-554
  VBR, VBW/RBW RATIO, 2-565
  VB, VID BW AutoMan, 2-564
  ZERO, ZERO, 2-584
  ZOOMRB, ZOOM TO RES BW, 2-586
Battery failed, operating error, 2049, 3-20
beep, BP command, 2-57
B Hardware Selected, operating error, 2012, 3-14
bias
  current, determine minimum, 2-240
  current, determine possible, 2-241
  external mixer, 2-237
binary
  data, specifying, 2-242
  format trace data, 2-513
Binary span atten, hardware broken error, 7026, 3-29
BIT, return value, 2-51
blank
  active function readout, 2-160
  display of active trace(s), 2-538
  display of trace data, 2-519
  local oscillator feedthrough, BLANKFT command, 2-54
  stored graphics item, 2-571
  the graticule, 2-156
  trace, BLANK command, 2-53
  USER keys, KEYCLR command, 2-191
block, format trace data, 2-513
B–DL▸B, BML command, 2-56
branching, looping, and interrupting, 1-47
B▸C, BTC command, 2-58
build
  a new limit line, 2-211
  interactive set of key functions, 2-428
bypass preselection, 2-406

**C**

Cal error, hardware broken error, 7007, 3-25
calibrate
  CAL command, 2-60
  spectrum analyzer, 1-19
calibration, 2-60, 2-72
  correction factors, CALCOR command, 2-61
  frequency, CALFREQ command, 2-63
  power, CALPWR command, 2-65
  procedure for, 1-18, 1-19
  reference, 2-65
  source, CALSRC command, 2-67
Calibration atten, diagnostics error, 0028, 3-6
Calibration atten, diagnostics error, 0038, 3-7
Cal/I.F. cables?, diagnostics error, 0042, 3-8
Cal input incorrect?, diagnostics error, 0062, 3-10
CAL POWER lvl err, operating error, 2041, 3-19
Cannot lock YTO, hardware broken error, 7012, 3-26
Cannot test 70905/6B, diagnostics error, 0061, 3-10

Can't finetune YTO, hardware broken error, 7013, 3-26
carriage-return/line-feed
  suppression of, 1-63
catalog
  CATALOG command, 2-69
  of internal memory, 1-33, 1-47
  of user memory, displaying, 2-113, 2-114
  of user memory to return, 2-115, 2-116
center frequency
  difference between markers, 2-308
  maintain marked signal at, 2-313
  setting, CF command, 2-72
  setting step size, SS command, 2-488
  setting to marker frequency, 2-273
  step size to marker frequency, 2-308
centering identified signal, 2-165
change
  accuracy criteria, 2-363
  color, C-4
  file prefix, 2-398
  HP-IB address with front-panel controls, 1-11
  size of measurement results, 2-190
  trace length, 2-535
character
  height, CHEIGHT command, 2-74
  width, CWIDTH command, 2-93
Check mixer bias, operating error, 2026, 3-17
clear
  display, CLRDSP command, 2-76
  graphics from memory, 2-76
  power average, CLRPAVG command, 2-77
  status byte, CLS command, 2-79
  user-defined keys, KEYCLR command, 2-191
  write, CLRW command, 2-78
CLEAR 718, command, 1-18, 1-44
CLEAR, command, A-2
clearing the display, 1-73
clear-write mode, 2-364
clock, 2-525
Cmd out of sequence, operating error, 2010, 3-14
command
  as a variable, 1-32
  repeat list of commands, 2-435
  syntax, 2-1
Command
  ABORT, No Menu Key, 2-6
  ABS, No Menu Key, 2-8
  ACTDEF, No Menu Key, 2-9
  ACTPARM, No Menu Key, 2-13
  ADAPBPCTL, A◂A*DL/(A+B+C), 2-14
  ADAPBTL, A◂A*DL/(A+B), 2-15
  ADBTL, A◂A*DL/B, 2-16
  ADC, select adc, 2-17
  ADCTL, A◂A*DL/C, 2-19
  ADD, No Menu Key, 2-20
  AMB, A−B▸A On Off, 2-22
  AMBMC, A◂(A−B)−C, 2-24
  AMBMCPL, A◂(A−B)−C+DL, 2-25
  AMBPL, A−B+DL On Off, 2-26
  AMC, A−C▸A On Off, 2-28
  AMCPL, A◂(A−C)+DL, 2-29
  AMETER, AMETER ON OFF, 2-30
  AMPCOR, AMPCOR On Off, 2-31
  AMPU, No Menu Key, 2-33
  ANNOFF, LOCKOUT ANOTATN, 2-38
  ANNOT, ANOTATN On Off, 2-39
  APB, A+B▸A, 2-40
  APBDCTL, A◂DL*(A+B)/C, 2-41
  ASWP, No Menu Key, 2-42
  AT, ATTEN AutoMan, 2-43
  AUNITS, units menu, 2-45
  AVG, No Menu Key, 2-47
  AXB, A XCH B, 2-49
  AXC, A XCH C, 2-50
  BIT, No Menu Key, 2-51
  BLANK, BLANK A, 2-53
  BLANKFT, BNKSTRT On Off, 2-54
  BML, B-DL▸B, 2-56
  BP, No Menu Key, 2-57
  BTC, C◂B, 2-58
  BXC, B XCH C, 2-59
  CAL, CAL ALL, 2-60
  CALCOR, cal enable, 2-61
  CALFREQ, FREQ FOR CAL, 2-63
  CALPWR, POWER FOR CAL, 2-65
  CALSRC, CAL SRC INT EXT, 2-67
  CATALOG, catalog && MSI, 2-69
  CF, CENTER, 2-72
  CHEIGHT, No Menu Key, 2-74
  CLRDSP, No Menu Key, 2-76
  CLRPAVG, No Menu Key, 2-77
  CLRW, CLEAR WRT A, 2-78
  CLS, No Menu Key, 2-79
  CNVLOSS, CONV LOSS, 2-80
  COMPRESS, No Menu Key, 2-82
  CONCAT, No Menu Key, 2-84
  CONFIG, CONFIG, 2-86
  CONTS, CONT SWEEP, 2-87
  CORTOLIM, lim ⟷ ampcor, 2-88
  COUPLE, COUPLNG AC DC, 2-89
  CPLAVG, CPL AVG On Off, 2-90
  CPLDET, CPL DET On Off, 2-92
  CWIDTH, No Menu Key, 2-93
  DA, No Menu Key, 2-94
  DEBUG, DEBUG On Off, 2-95

DELETE, No Menu Key, 2-97
DET, DETECTR AutoMan, 2-98
DETSEL, DET SEL LOG V, 2-100
DISPOSE, FORMAT, 2-102
DISPU, PURGE FILE, 2-105
DIV, No Menu Key, 2-106
DL, DSP LIN On Off, 2-108
DONE, No Menu Key, 2-110
DSPLY, No Menu Key, 2-111
DSPMODE, No Menu Key, 2-113
DSPTEXT, No Menu Key, 2-115
DWINDOW, No Menu Key, 2-117
ENTER, No Menu Key, 2-120
ERASE, ERASE ALL, 2-122
ERR, No Menu Key, 2-123
EXP, No Menu Key, 2-124
EXTIF, EXT IF On Off, 2-126
EXTVID, EXT VID FM IQ, 2-127
FALIMIT, LIMSTRT On Off, 2-130
FA, START, 2-129
FB, STOP, 2-132
FETCH, No Menu Key, 2-133
FFTKNL, No Menu Key, 2-139
FFT, No Menu Key, 2-134
FLIMIT, FRQ LIM On Off, 2-140
FOFFSET, FREQ OFFSET, 2-141
FORMAT, FORMAT, 2-142
FREQU, No Menu Key, 2-143
FS, FULL SPAN, 2-148
FULBAND, fulband KAQUVE, 2-149
FUNCDEF, No Menu Key, 2-151
GRAPH, No Menu Key, 2-154
GRAT, GRAT On Off, 2-156
GRATSCRL, GRATSCR On Off, 2-157
GRID, No Menu Key, 2-158
HD, HOLD, 2-160
HNLOCK, LOCK HARMNC#, 2-161
HNLOCK, LOCK H# On Off, 2-161
HP, 66 MODE On Off, 2-163
IDCF, SIG ID ▸CF, 2-165
IDFREQ, No Menu Key, 2-166
IDMODE, IMAGE SHIFT, 2-168
ID, No Menu Key, 2-164
IDN, ROM VERSION, 2-170
IDSTAT, No Menu Key, 2-171
IF/THEN, No Menu Key, 2-172
IFTKNL, No Menu Key, 2-174
INPUTMOD, No Menu Key, 2-176
INPUT, select input, 2-175
INT, No Menu Key, 2-178
INZ, INPUT IMPED, 2-179
IP, (I-P), 2-180
IT, No Menu Key, 2-187
IWINDOW, No Menu Key, 2-190
KEYCLR, PRESET USER, 2-191
KEYDEF, DEFINE USR KEY, 2-192
KEYPST, PRESET USER, 2-195
KS˜, KS, 2-196
LAMBDA, No Menu Key, 2-197
LG, LOG dB/DIV, 2-198
LIMIAMP, AMPTD VALUE, 2-200
LIMIBEEP, BEEPER On Off, 2-202
LIMIBOT, LAST SEGMENT, 2-203
LIMIDEL, DELETE ALL, 2-204
LIMIDONE, No Menu Key, 2-205
LIMIEDIT, enter limit, 2-206
LIMIFAIL, No Menu Key, 2-207
LIMIFREQ, FREQ VALUE, 2-208
LIMIHALF, UPPER/LOWER, 2-210
LIMILINE, enter limit, 2-211
LIMINEXT, NEXT SEGMENT, 2-213
LIMIRCL, RECALL LIMIT or LOAD FILE, 2-214
LIMIREL, RELATIVE On Off, 2-215
LIMISAV, SAVE LIMIT, 2-216
LIMISCRL, No Menu Key, 2-217
LIMISDEL, DELETE SEGMENT, 2-218
LIMISEG, enter limit, 2-219
LIMITEST, LIMITS On Off, 2-221
LIMITYPE, type, 2-223
LIMTOCOR, lim ⟷ ampcor, 2-224
LINES, LINES On Off, 2-225
LINET, No Menu Key, 2-226
LN, LINEAR, 2-228
LOAD or RCLT, LOAD FILE or RECALL TRACE, 2-229
LOG, No Menu Key, 2-231
LOSTART, LCL OSC START, 2-233
LOSTOP, LCL OSC STOP, 2-235
MBIAS, BIAS On Off, 2-237
MBIASPK, BIAS PK START, 2-238
MBMAX, BIAS PK MAX, 2-239
MBMIN, BIAS PK MIN, 2-240
MBRES, BIAS PK RES, 2-241
MDS, No Menu Key, 2-242
MEAN, No Menu Key, 2-244
MEASU, No Menu Key, 2-246
MEASURE, STM RSP On Off, 2-252
MEM, catalog && MSI or INTRNL MEMORY, 2-254
MIL, MAX IN AutoMan, 2-256
MINH, MIN HOLD A, 2-260
MIN, No Menu Key, 2-258
MKACT, ACTIVE MARKER, 2-264
MKAL, REL LEFT, 2-265
MKA, No Menu Key, 2-262
MKAR, REL RIGHT, 2-267
MKBWA, mkr bw/ zoom bw, 2-271
MKBW, MKR BW On Off, 2-269

MKCF, ▸CF, 2-273
MKCONT, MK STOP On Off, 2-274
MKDACT, No Menu Key, 2-277
MKD, DELTA, 2-275
MKDREFA, No Menu Key, 2-278
MKDREFF, No Menu Key, 2-280
MKFABS, No Menu Key, 2-284
MKF, MKR NRM On Off, 2-282
MKMIN, MINIMUM POINT, 2-285
MKN, MKR NRM On Off, 2-286
MKNOISE, MKNOISE On Off, 2-288
MK, No Menu Key, 2-261
MKOFF, MKR NRM On Off, 2-290
MKPABS, No Menu Key, 2-292
MKPAUSE, MKPAUSE On Off, 2-293
MKPITX, PIT EXCURSN, 2-294
MKPK, HIGHEST PEAK, 2-296
MKP, No Menu Key, 2-291
MKPX, PEAK EXCURSN, 2-298
MKREAD, readout, 2-300
MKRELPWR, REL POWER, 2-302
MKRINSYS, RIN, 2-304
MKRL, ▸REF, 2-306
MKSP, Δ▸SPAN, 2-307
MKSS, ▸CF STEP, 2-308
MKSTOP, MK STOP On Off, 2-309
MKT, No Menu Key, 2-310
MKTRACE, MARKER TRACE A, 2-312
MKTRACK, SIG TRK On Off, 2-313
MKTV, SIG TRK LIMIT, 2-314
MKTYPE, No Menu Key, 2-316
ML, MAX MXR LEVEL, 2-317
MODADD, No Menu Key, 2-321
MODID, No Menu Key, 2-324
MOD, No Menu Key, 2-319
MOV, No Menu Key, 2-326
MPY, No Menu Key, 2-327
MSG, No Menu Key, 2-329
MSI, INTRNL MEMORY or `HP-IB DISK` or `HP-MSIB DSK && CRD`, 2-330
MXMH, MAX HOLD A, 2-334
MXM, No Menu Key, 2-332
NORM, NORM On Off, 2-335
NSTART, IMAGE N START, 2-337
NSTATE, NO. OF STATES, 2-339
NSTOP, IMAGE N STOP, 2-341
ONEOS, No Menu Key, 2-343
ONMENU, No Menu Key, 2-345
ONMKR, No Menu Key, 2-347
ONUSER, No Menu Key, 2-349
ONWINDOW, No Menu Key, 2-351
OP, No Menu Key, 2-353
OPTATN, ATTEN, 2-354
OPTMODE, LW MODE OPT ELEC, 2-356
OPTPWR, PWR BAR On Off, 2-357
OR, No Menu Key, 2-359
OUTPUT, No Menu Key, 2-361
OVRSWP, OVERSWP On Off, 2-363
OVRW, No Menu Key, 2-364
PADC, preset adc, 2-367
PA, No Menu Key, 2-365
PATHLOCK, PATHLOK On Off, 2-368
PAUSE, PAUSE, 2-369
PCDELTA, CENTER DELTA, 2-371
PC, PRESEL CENTER, 2-370
PDA, No Menu Key, 2-374
PDF, No Menu Key, 2-376
PD, No Menu Key, 2-372
PEAKS, No Menu Key, 2-378
PEN, No Menu Key, 2-382
PERASE, PARTIAL ERASE, 2-384
PERSIST, PERSIST On Off, 2-386
PINPUT, preset input, 2-387
PLOT, No Menu Key, 2-388
POSU, No Menu Key, 2-390
POWERON, poweron menu, 2-394
PP, PRESEL PEAK, 2-395
PREAMP, PREAMP On Off, 2-397
PREFX, CHANGE PREFIX, 2-398
PR, No Menu Key, 2-396
PROTECT, No Menu Key, 2-400
PRSDAC, PRESEL DAC, 2-404
PRSENABL, PRESEL On Off, 2-406
PRSHYST, PRESEL HYS, 2-407
PSTATE, P STATE On Off, 2-408
PU, No Menu Key, 2-409
PURGE, PURGE FILE, 2-410
PWRAVG, PWR AVG On Off, 2-411
PWRBARON, PWR BAR On Off, 2-414
PWRBAR, PWR BAR On Off, 2-413
PWRBW, No Menu Key, 2-415
PWRMODE, PWR MTR OptElec, 2-418
RB, RES BW AutoMan, 2-419
RBR, RB/SPAN RATIO, 2-421
RCLD, LOAD FILE or `RECALL PROGRAM`, 2-422
RCLS, RECALL STATE or `LOAD FILE`, 2-423
RCLT or LOAD, RECALL TRACE or `LOAD FILE`, 2-424
RCLU, LOAD FILE or `RECALL USER` or `RECALL USERKEY`, 2-425
RCVRMODE, VBW CPL Rx SA, 2-426
READMENU, No Menu Key, 2-428
RELADC, release adc, 2-430
RELHPIB, No Menu Key, 2-432
RELMOD, release module, 2-433
REPEAT/UNTIL, No Menu Key, 2-435

RETURN, No Menu Key, 2-437
REV, ROM VERSION, 2-439
RLPOS, REF LVL POSN, 2-442
RL, REF LVL, 2-440
RMS, No Menu Key, 2-443
ROFFSET, AMP REF OFFSET, 2-445
RQS, No Menu Key, 2-446
RSPSVTY, RSPSVTY, 2-448
SAVED, SAVE PROGRAM, 2-450
SAVES, SAVE STATE, 2-451
SAVET, SAVE TRACE A, 2-453
SAVEU, SAVE USERKEY, 2-454
SCALE, No Menu Key, 2-455
SER, STATE, 2-457
SG, STPGAIN AutoMan, 2-459
SIGDEL, SIG ID AMPTD Δ, 2-461
SIGID, SIG ID MAN OFF, 2-462
SIGID, SIGNAL IDENT, 2-462
SMOOTH, No Menu Key, 2-463
SNGLS, SINGLE SWEEP, 2-465
SP, SPAN, 2-466
SQR, No Menu Key, 2-468
SRCALC, alc/track, 2-469
SRCAM, AM % On Off, 2-470
SRCAMF, AM FREQ, 2-472
SRCAT, SRC ATN AutoMan, 2-473
SRCBLNK, BLANKNG On Off, 2-475
SRCMOD, AM INT EXT, 2-476
SRCOSC, SRC OSC INT EXT, 2-477
SRCPOFS, SRC PWR OFFSET, 2-478
SRCPSTP, PWR STP AutoMan, 2-479
SRCPSWP, PWR SWP On Off, 2-481
SRCPWR, SRC PWR On Off, 2-483
SRCTKPK, TRACKNG PEAK, 2-486
SRCTK, TRACKNG ADJUST, 2-484
SRQ, No Menu Key, 2-487
SS, CF STEP AutoMan, 2-488
STARTUP, CONFIRM RESTART, 2-492
STATE, No Menu Key, 2-494
STB, No Menu Key, 2-495
STDEV, No Menu Key, 2-498
STOR or SAVET, SAVE LIMIT or `SAVE PROGRAM` or `SAVE TRACE A` or `SAVE STATE` or `SAVE USERKEY`, 2-500
STORREF, trace norm, 2-502
ST, SWPTIME AutoMan, 2-490
SUB, No Menu Key, 2-505
SUM, No Menu Key, 2-507
SUMSQR, No Menu Key, 2-509
SWPMODE, No Menu Key, 2-511
SYSCOR, SYS COR On Off, 2-512
TDF, No Menu Key, 2-513
TEST, ANALYZR TEST, 2-516
TEXT, No Menu Key, 2-517
THREED, 3-DIMEN On Off, 2-520
THREEDH, HORZ OFFSET, 2-522
THREEDV, VERT OFFSET, 2-524
TH, THRESHD On Off, 2-519
TIME, No Menu Key, 2-525
TITLE, TITLE, 2-526
TM, BW, Swp, 2-527
TP, No Menu Key, 2-528
TRA/TRB/TRC, No Menu Key, 2-530
TRCOND, No Menu Key, 2-533
TRDEF, LENGTH A, 2-535
TRDSP, VIEW (A,B,C) BLANK (A,B,C), 2-538
TRIGDEL, TRIGGE DELAY, 2-539
TRPST, TRACE PRESET, 2-541
TRSTAT, No Menu Key, 2-542
TS, SINGLE SWEEP, 2-543
TWNDOW, No Menu Key, 2-545
USERERR, No Menu Key, 2-547
USERKEY, SAVE USERKEY, 2-549
USERLOCK, No Menu Key, 2-550
USERMSG, No Menu Key, 2-551
USERWARN, WARNCTRL On Off, 2-552
USRPWR, USR PWR On Off, 2-554
USTATE, No Menu Key, 2-555
VARDEF, No Menu Key, 2-558
VARIANCE, No Menu Key, 2-560
VAVG, VID AVG On Off, 2-562
VBR, VBW/RBW RATIO, 2-565
VB, VID BW AutoMan, 2-564
VIEW, VIEW A, 2-566
VTDL, VID LIN On Off, 2-567
VTH, HYS LEVEL, 2-569
VTL, VIDEO LEVEL, 2-570
VW, No Menu Key, 2-571
WAIT, No Menu Key, 2-572
WARNCTRL, WARNCTRL On Off, 2-575
WARN, WARNCTRL On Off, 2-573
XCH, No Menu Key, 2-576
XERR, No Menu Key, 2-577
XNOISE, Noise On Off, 2-578
XWARN, WARNCTRL On Off, 2-580
YLABELS, LABEL Y On Off, 2-582
ZERO, ZERO, 2-584
ZOOMRB, ZOOM TO RES BW, 2-586
`Command syntax error`, operating error, 2029, 3-17
communicating with the spectrum analyzer, 1-14
compare
  active trace data, 2-221
  amplitude trace data to previous sweep, 2-260
  trace data, 2-334

traces, store lesser values, 2-258
values, 2-332
COMPRESS command, 2-82
computation error
8000, Divide by zero, 3-35
8001, Float pt overflow, 3-35
8002, Log of zero, 3-35
8003, Log of negative, 3-35
8004, Integer overflow, 3-35
8005, Square root error, 3-35
8006, Modulus of zero, 3-35
8999, Float pt underflow, 3-35
computation errors 8000 – 8999, 3-35
compute
average, 2-47
bandwidth, from percentage of measured power, 2-415
integer values, 2-178
mean value, 2-244
root mean square, 2-443
square root, 2-468
standard deviation, 2-498
sum of amplitude levels, 2-507
sum of square of amplitude levels, 2-509
variance, 2-560
computer
control versus spectrum analyzer control of HP-IB, 1-71
return value to, 1-3
concatenate, CONCAT command, 2-84
condensed format, return the catalog in, 2-69
Confidence test failed, hardware warning error, 6008, 3-23
Confidence test passed, hardware warning error, 6001, 3-22
configuration
at power-up, 1-58
configuration, CONFIG command, 2-86
connect trace points, 2-225
conserving memory, 1-63
continue sweep past marker, 2-274
continuous sweep, CONTS command, 2-87
CONT key, 1-72
control
codes and escape characters, C-3
coupling between LG, LN, and DETSEL, 2-92
coupling between VAVG and PWRAVG, CPLAVG command, 2-90
display of annotation for horizontal graticule, 2-582
display of normalized measurement results, 2-256
excursion value for marker pit operations, 2-294
external video switch, 2-127
instrument behavior, receiver or spectrum analyzer, 2-426
of instrument settings, 1-15
optical input attenuator, 2-354
positioning of displayed horizontal graticule lines, 2-157
scale for power bar, 2-418
start up configuration operation, 2-492
step gain in signal path, 2-459
trace normalization for stimulus-response measurements, 2-335
trigger delay for selected ADC, 2-539
value of receiver mode flag, 2-426
video averaging of power meter value, 2-411
video trigger display lines, 2-567
conversion loss, CNVLOSS command, 2-80
convert
frequency to position units, 2-390
measurement units to parameter units, 2-33
parameter units, 2-246
position units to Hertz, 2-143
time units to position units, 2-390
to position units, POSU command, 2-390
correction
at specified frequencies, 2-31
factors, erase, 2-122
Correction dac, hardware broken error, 7028, 3-29
couple average, CPLAVG command, 2-90
COUPLE command, 2-89
couple detector, CPLDET command, 2-92
coupling
control between VAVG and PWRAVG, CPLAVG command, 2-90
of attenuator to reference level, mixer level, and maximum input level, 2-43
of sweep time, 2-363
video bandwidth, 2-564, 2-566
creating
a limit line, 2-210
graphics, 1-73
new functions, 1-4
trace arrays, 1-5
user-defined traces, 2-535
user-defined variables, 1-5
user-defined variables and trace arrays, 1-5
CRYSTAL bandwidths, diagnostics error, 0023, 3-5
current firmware identification, 2-170

**D**

dashed lines, drawing, 2-226
data transfer to controller, 1-23
date code, returning, 2-439
debug, 1-72
debugging programs, 1-72
debug mode
  DEBUG command, 2-95
  faulty syntax, 2-95
Decade span atten, hardware broken error, 7025, 3-29
default
  graphics parameters, 2-76
  state, set (USER) keys to, 2-195
define
  alternate scale for graphics, 2-117
  conditions for interrupt, 2-446
  function, FUNCDEF command, 2-151
  graphics window, DWINDOW command, 2-117
  limit-line segments, 2-219
  list of functions, 2-343, 2-345, 2-347, 2-349, 2-351
  slope and offset of limit-line segments, 2-219
  user commands, 2-151
  user-defined key, KEYDEF command, 2-192
  user-defined variable, VARDEF command, 2-558
definition
  error messages, 3-1
  interdependent commands, 2-2
  manual page, 2-1
  Math and Move Functions, 1-34
  preset state, 2-2
  range, 2-2
  requirements, 2-2
  restrictions, 2-2
delete
  graphics, 2-97
  item, DELETE command, 2-97
  limit-line segment, 2-218
deleting items, 1-91
description
  of error and error-reporting module, returning, 2-577
destination, 1-34
detection mode, DET command, 2-98
detector select, DETSEL command, 2-100
determine
  active input in preset state, 2-387
  if signal is present, 2-462
  maximum mixer bias, 2-239
  minimum bias current, 2-240
  possible bias currents, 2-241
  what triggers sweep, 2-527
diagnostics error
  0001, NO LO?, 3-2
  0002, HP-MSIB addr 70902, 3-2
  0003, HP-MSIB addr 70903, 3-2
  0004, HP-MSIB addr 70904, 3-2
  0005, HP-MSIB addr 70905/6, 3-3
  0007, 21.4MHz daisy chain, 3-3
  0008, NO RF SECTION?, 3-3
  0009, NO I.F. SECTION?, 3-3
  0010, HP-MSIB addr 70907, 3-3
  0011, No EMIM Section?, 3-3
  0012, HP-MSIB addr 70600, 3-4
  0013, No PRESELECTOR?, 3-4
  0014, Incorrect System, 3-4
  0015, HP-MSIB addr 70700, 3-4
  0020, 21.4MHz input cable, 3-4
  0021, Video output cable, 3-5
  0022, LC bandwidths, 3-5
  0023, CRYSTAL bandwidths, 3-5
  0024, Problem/ampl low?, 3-5
  0025, Step gain amplifier, 3-5
  0026, Res BW-accuracy, 3-5
  0027, Res BW-amplitude, 3-6
  0028, Calibration atten, 3-6
  0029, Log amplifier, 3-6
  0030, 21.4MHz input cable, 3-6
  0031, Video output cable, 3-6
  0032, LC board, 3-6
  0033, Log board, 3-7
  0034, Problem/ampl low?, 3-7
  0035, Step gain amplifier, 3-7
  0036, Res BW-accuracy, 3-7
  0037, Res BW-amplitude, 3-7
  0038, Calibration atten, 3-7
  0039, Log amplifier, 3-8
  0040, Tune+Span, 3-8
  0041, RF attenuator, 3-8
  0042, Cal/I.F. cables?, 3-8
  0043, Problem/ampl low?, 3-8
  0044, Low/high band switch, 3-9
  0045, RF attenuator, 3-9
  0046, Step gain amplifier, 3-9
  0050, Res BW -- CF, 3-9
  0051, Res BW -- CF ampl, 3-9
  0052, Res BW -- CF ampl, 3-9
  0053, Res BW -- CF ampl, 3-10
  0060, RF attenuator, 3-10
  0061, Cannot test 70905/6B, 3-10
  0062, Cal input incorrect?, 3-10
  0063, ATTENUATOR Section, 3-10
  0064, RF Switch 1, 3-11
  0065, RF Switch 2, 3-11
  0066, RF Switch 3, 3-11

0067, RF Switch 4, 3-11
0068, RF Switch 1, 3-11
0069, RF Switch 2, 3-11
0070, RF Preamplifier, 3-12
diagram, syntax, 2-1
directory full, operating error, 2059, 3-21
disable
front panel controls, 2-160
system specific amplitude corrections, 2-512
disable or enable warning messages, WARNCTRL command, 2-575
Discriminator unlock, hardware broken error, 7074, 3-33
display
address, DA command, 2-94
annotation, turn off, 2-38
a number, 2-111
catalog of user memory, 2-113
control of annotation for horizontal graticule, 2-582
draw a picture on, 1-6
execute functions when redrawn, 2-351
frequency difference X dB below marker peak, 2-271
functions mode, C-4
grid, GRID command, 2-158
HP-MSIB addresses of modules, 2-113
in three-dimensions, 2-520
line, DL command, 2-108
marker, MK command, 2-261
mode, DSPMODE command, 2-113
module-level parameters, 2-113
noise bandwidth at marker, 2-288
of power bar, 2-414
persistence, 2-386
plotting, 2-388
position marker on, 2-261
returning characters from, 2-329
revision numbers, 2-113
serial numbers, 2-113
stored trace data, 2-154
system-level parameters, 2-113
traces horizontally in three-dimensions, 2-522
user defined warning message, 2-552
variable, DSPLY command, 2-111
vertical traces in three-dimensions, 2-524
video trigger display lines, 2-567
write message on, 1-5, 2-517, 2-551
Display Functions
ANNOT, ANOTATN On Off, 2-39
DL, DSP LIN On Off, 2-108
GRAT, GRAT On Off, 2-156
HD, HOLD, 2-160
IWINDOW, No Menu Key, 2-190
PLOT, No Menu Key, 2-388
THREED, 3-DIMEN On Off, 2-520
THREEDH, HORZ OFFSET, 2-522
THREEDV, VERT OFFSET, 2-524
TH, THRESHD On Off, 2-519
TITLE, TITLE, 2-526
displaying variables, 1-81
display memory access address, setting the, 2-94
DISPOSE command, 2-102
dispose user menu, DISPU command, 2-105
Dist amp A error, hardware broken error, 7034, 3-30
Dist amp B error, hardware broken error, 7035, 3-31
distribution of signals, analyzing, 2-374, 2-376
Divide by zero, computation error, 8000, 3-35
division
by N, 2-124
DIV command, 2-106
retain remainder after, 2-319
DL*(A+B)/C▸A, APBDCTL command, 2-41
DONE command, 2-110
dots, drawing, 2-226
draw
a grid, 2-158
dots or dashed lines, 2-226
grids on the display, 1-81
lines, pen down, 2-372
picture on the display, 1-6
stored graphics item, 2-571
Duplicate identifier, operating error, 2014, 3-15
DWINDOW, command, 1-73, 1-92

## E

EAROM unprotected, hardware warning error, 6000, 3-22
editor on, limit line, 2-206
EEPROM check error, hardware broken error, 7079, 3-33
electrical
calibrated display, selecting, 2-356
emulation mode, setting, HP command, 2-163
enable
or disable warning messages, WARNCTRL command, 2-575
sweep past marker, 2-274
system specific amplitude corrections, 2-512
end of sweep, execute functions, 2-343
end sweep at marker, 2-309

enhance text, C-3
ENTER, command, 1-70, 1-71, A-2
enter information from the front panel during remote control, 1-5
enter via HP-IB, ENTER command, 2-120
EP, command argument, 1-17
erase
  file from user memory, 2-410
  hysteresis, 2-407
  internal memory, 2-102
  internal memory and analyzer settings, 2-384
  limit-line table, 2-204
  memory device, 2-142
  memory, ERASE command, 2-122
erasing memory, 1-59
erasing user memory, 1-61
`Err in MDOC response`, hardware warning error, 6010, 3-23
error
  ERR command, 2-123
  HARDWARE NOT PRESENT, 2-100
  illegal operation, 2-94, 2-196
  memory overflow, 2-94, 2-196
  message of your design, returning, 2-547
  return customer error message, 2-547
  test internal circuitry, 2-516
  to allow additional, 2-363
  to return error message, 2-123
Error 2032, "Hardware not present", 2-370, 2-371
Error 2047, "Preselector disabled", 2-370, 2-371
error-correcting routine, 2-60, 2-63, 2-65, 2-67
error messages
  0001, diagnostics error, 3-2
  0002, diagnostics error, 3-2
  0003, diagnostics error, 3-2
  0004, diagnostics error, 3-2
  0005, diagnostics error, 3-3
  0007, diagnostics error, 3-3
  0008, diagnostics error, 3-3
  0009, diagnostics error, 3-3
  0010, diagnostics error, 3-3
  0011, diagnostics error, 3-3
  0012, diagnostics error, 3-4
  0013, diagnostics error, 3-4
  0014, diagnostics error, 3-4
  0015, diagnostics error, 3-4
  0020, diagnostics error, 3-4
  0021, diagnostics error, 3-5
  0022, diagnostics error, 3-5
  0023, diagnostics error, 3-5
  0024, diagnostics error, 3-5
  0025, diagnostics error, 3-5
  0026, diagnostics error, 3-5
  0027, diagnostics error, 3-6
  0028, diagnostics error, 3-6
  0029, diagnostics error, 3-6
  0030, diagnostics error, 3-6
  0031, diagnostics error, 3-6
  0032, diagnostics error, 3-6
  0033, diagnostics error, 3-7
  0034, diagnostics error, 3-7
  0035, diagnostics error, 3-7
  0036, diagnostics error, 3-7
  0037, diagnostics error, 3-7
  0038, diagnostics error, 3-7
  0039, diagnostics error, 3-8
  0040, diagnostics error, 3-8
  0041, diagnostics error, 3-8
  0042, diagnostics error, 3-8
  0043, diagnostics error, 3-8
  0044, diagnostics error, 3-9
  0045, diagnostics error, 3-9
  0046, diagnostics error, 3-9
  0050, diagnostics error, 3-9
  0051, diagnostics error, 3-9
  0052, diagnostics error, 3-9
  0053, diagnostics error, 3-10
  0060, diagnostics error, 3-10
  0061, diagnostics error, 3-10
  0062, diagnostics error, 3-10
  0063, diagnostics error, 3-10
  0064, diagnostics error, 3-11
  0065, diagnostics error, 3-11
  0066, diagnostics error, 3-11
  0067, diagnostics error, 3-11
  0068, diagnostics error, 3-11
  0069, diagnostics error, 3-11
  0070, diagnostics error, 3-12
  2000, operating error, 3-13
  2001, operating error, 3-13
  2002, operating error, 3-13
  2003, operating error, 3-13
  2004, operating error, 3-13
  2005, operating error, 3-13
  2006, operating error, 3-13
  2007, operating error, 3-14
  2008, operating error, 3-14
  2009, operating error, 3-14
  2010, operating error, 3-14
  2011, operating error, 3-14
  2012, operating error, 3-14
  2013, operating error, 3-15
  2014, operating error, 3-15
  2015, operating error, 3-15
  2016, operating error, 3-15
  2018, operating error, 3-15

2019, operating error, 3-16
2020, operating error, 3-16
2021, operating error, 3-16
2022, operating error, 3-16
2023, operating error, 3-16
2024, operating error, 3-16
2025, operating error, 3-16
2026, operating error, 3-17
2027, operating error, 3-17
2028, operating error, 3-17
2029, operating error, 3-17
2030, operating error, 3-17
2031, operating error, 3-17
2032, operating error, 3-17
2033, operating error, 3-18
2034, operating error, 3-18
2035, operating error, 3-18
2036, operating error, 3-18
2037, operating error, 3-18
2038, operating error, 3-18
2039, operating error, 3-18
2040, operating error, 3-19
2041, operating error, 3-19
2042, operating error, 3-19
2043, operating error, 3-19
2044, operating error, 3-19
2045, operating error, 3-19
2046, operating error, 3-19
2047, operating error, 3-20
2048, operating error, 3-20
2049, operating error, 3-20
2050, operating error, 3-20
2051, operating error, 3-20
2052, operating error, 3-20
2053, operating error, 3-20
2054, operating error, 3-20
2055, operating error, 3-21
2056, operating error, 3-21
2057, operating error, 3-21
2058, operating error, 3-21
2059, operating error, 3-21
2060, operating error, 3-21
2802, operating error, 3-21
2803, operating error, 3-21
6000, hardware warning error, 3-22
6001, hardware warning error, 3-22
6002, hardware warning error, 3-22
6003, hardware warning error, 3-22
6004, hardware warning error, 3-22
6005, hardware warning error, 3-22
6006, hardware warning error, 3-22
6007, hardware warning error, 3-22
6008, hardware warning error, 3-23
6009, hardware warning error, 3-23
6010, hardware warning error, 3-23
6011, hardware warning error, 3-23
6012, hardware warning error, 3-23
6013, hardware warning error, 3-23
6014, hardware warning error, 3-23
6015, hardware warning error, 3-23
6016, hardware warning error, 3-24
6017, hardware warning error, 3-24
6018, hardware warning error, 3-24
6019, hardware warning error, 3-24
6802, hardware warning error, 3-24
6805, hardware warning error, 3-24
7000, hardware broken error, 3-25
7001, hardware broken error, 3-25
7002, hardware broken error, 3-25
7003, hardware broken error, 3-25
7004, hardware broken error, 3-25
7005, hardware broken error, 3-25
7006, hardware broken error, 3-25
7007, hardware broken error, 3-25
7008, hardware broken error, 3-25
7009, hardware broken error, 3-26
7010, hardware broken error, 3-26
7011, hardware broken error, 3-26
7012, hardware broken error, 3-26
7013, hardware broken error, 3-26
7014, hardware broken error, 3-27
7015, hardware broken error, 3-27
7016, hardware broken error, 3-27
7017, hardware broken error, 3-27
7018, hardware broken error, 3-27
7019, hardware broken error, 3-28
7020, hardware broken error, 3-28
7021, hardware broken error, 3-28
7022, hardware broken error, 3-28
7023, hardware broken error, 3-28
7024, hardware broken error, 3-29
7025, hardware broken error, 3-29
7026, hardware broken error, 3-29
7027, hardware broken error, 3-29
7028, hardware broken error, 3-29
7029, hardware broken error, 3-30
7030, hardware broken error, 3-30
7031, hardware broken error, 3-30
7032, hardware broken error, 3-30
7033, hardware broken error, 3-30
7034, hardware broken error, 3-30
7035, hardware broken error, 3-31
7036, hardware broken error, 3-31
7041, hardware broken error, 3-31
7042, hardware broken error, 3-31
7043, hardware broken error, 3-31
7044, hardware broken error, 3-32
7045, hardware broken error, 3-32
7046, hardware broken error, 3-32
7047, hardware broken error, 3-32

7048, hardware broken error, 3-32
7050, hardware broken error, 3-32
7073, hardware broken error, 3-33
7074, hardware broken error, 3-33
7075, hardware broken error, 3-33
7076, hardware broken error, 3-33
7077, hardware broken error, 3-33
7078, hardware broken error, 3-33
7079, hardware broken error, 3-33
7801, hardware broken error, 3-33
7802, hardware broken error, 3-33
7803, hardware broken error, 3-34
7804, hardware broken error, 3-34
7805, hardware broken error, 3-34
8000, computation error, 3-35
8001, computation error, 3-35
8002, computation error, 3-35
8003, computation error, 3-35
8004, computation error, 3-35
8005, computation error, 3-35
8006, computation error, 3-35
8999, computation error, 3-35
computation, 8000 – 8999, 3-35
factory-use only, 9000 – 9999, 3-36
hardware broken, 7000 – 7999, 3-25
hardware warning, 6000 – 6999, 3-22
not listed, 3-1
operating, 2000 – 2999, 3-13
remote retrival, 3-1
system diagnostics 0001 – 0070, 3-2
user application, 0001 – 0999, 3-2
with an asterisk (*), 3-2
error-reporting module, return description of error, 2-577
Example
Add 10 dB to trace A., Example 1-29., 1-37
Assign item numbers to a triangle and box., Example 1-83., 1-87
Assign spectrum analyzer to I/O path., Example 1-2., 1-18
Assign user-defined function to key., Example 1-41., 1-52
Blank and redraw item., Example 1-84., 1-88
Calibrate spectrum analyzer after one-hour warm-up. , Example 1-3., 1-19
Change measurement range but do not update trace, Example 1-4., 1-20
Change measurement range, then update trace information., Example 1-5., 1-21
Change trace length., Example 1-16., 1-32
Change window scale., Example 1-79., 1-85
Clear the display., Example 1-64., 1-73
Clear the display without presetting the spectrum analyzer, Example 1-65., 1-73
Compute product using single and multiple points as, Example 1-30., 1-39
Conditional branching., Example 1-35., 1-47
Control HP-IB. Request data from HP-IB device., Example 1-60., 1-70
Control HP-IB. Send data to HP-IB device., Example 1-59., 1-70
Create a graphics window, then draw a box within the window., Example 1-78., 1-84
Create a user-defined variable., Example 1-14., 1-32
Debug a faulty spectrum analyzer program., Example 1-63., 1-72
Delete all items., Example 1-88., 1-91
Delete item., Example 1-87., 1-91
Draw a grid., Example 1-75., 1-81
Draw a rectangle using the PA command., Example 1-66., 1-74
Draw a rectangle using the PR command., Example 1-67., 1-75
Draw box., Example 1-77., 1-83
Draw box with offset., Example 1-71., 1-79
Draw box without offset., Example 1-70., 1-79
Draw rectangles with different line types., Example 1-69., 1-76
Draw three rectangles., Example 1-68., 1-76
Draw trace within a graphics window., Example 1-81., 1-86
Enable END-OF-SWEEP interrupt, then return trace data, Example 1-57., 1-67
Enable ERROR-PRESENT service request and return error, Example 1-56., 1-66
Enable multiple service requests., Example 1-58., 1-68
Enable service requests for an ERROR-PRESENT condition., Example 1-55., 1-65
Erase a file., Example 1-53., 1-63
Erase all internal memory except correction factors and, Example 1-48., 1-62
Erase *all memory in the spectrum analyzer*, Example 1-47., 1-61
Erase an entry from the selected storage device., Example 1-46., 1-61
Erase a user-defined variable., Example 1-15., 1-32

Erase internal memory., Example 1-45., 1-61
Erase protected article in internal memory., Example 1-50., 1-62
Erase user-defined trace., Example 1-18., 1-33
Execute a user-defined function., Example 1-40., 1-52
Find marker position in position units., Example 1-31., 1-41
Illegal recursion with the FUNCDEF command, Example 1-44., 1-55
Initialize spectrum analyzer., Example 1-1., 1-18
Maximize available internal memory., Example 1-52., 1-63
Modify item shape., Example 1-86., 1-90
Move an active trace into a smaller trace array, Example 1-22., 1-35
Multiple conditional branching., Example 1-36., 1-47
Nest user-defined functions three levels deep., Example 1-38., 1-49
Offset graphics window position., Example 1-80., 1-85
Offset item., Example 1-85., 1-89
Protect a state-register file on a memory card in the, Example 1-51., 1-62
Protect internal memory against erasure with the, Example 1-49., 1-62
Recommended structure for user-defined function., Example 1-34., 1-45
Release computer from HP-IB., Example 1-62., 1-71
Repeat-until looping construct., Example 1-37., 1-47
Return amplitude of all elements in trace A., Example 1-9., 1-25
Return amplitude of the 400th element of trace A., Example 1-8., 1-25
Return correct trace amplitude using the MEASU command., Example 1-28., 1-37
Return false trace-amplitude level because conversion, Example 1-27., 1-37
Return marker frequency and amplitude to, Example 1-7., 1-24
Return trace data as binary numbers with data size of, Example 1-12., 1-29
Return trace data as decimal numbers in parameter units, Example 1-10., 1-28
Return trace data as integers in measurement units (TDF M)., Example 1-11., 1-28
Return trace data in block-data format with, Example 1-13., 1-29
Rounding of decimal values to integers., Example 1-25., 1-36
Set sweeper start frequency equal to spectrum analyzer start frequency., Example 1-61., 1-70
Store center frequency in a user-defined, Example 1-19., 1-34
Store math results in a user-defined variable., Example 1-21., 1-35
Store trace A in a user-defined trace., Example 1-17., 1-33
Store user-defined function in spectrum analyzer., Example 1-33, 1-43
Suppress carriage-return/line-feed to conserve, Example 1-54., 1-63
Turn off graphics window., Example 1-82., 1-86
Unwanted rounding of decimal values to integers., Example 1-26., 1-36
Unwanted truncation of multiplication results., Example 1-24., 1-36
Unwanted truncation of numbers when using the MOV command., Example 1-23., 1-36
Use ABORT to disrupt operation of user-defined functions., Example 1-39., 1-51
Use an instrument window to reduce the size of displayed measurement results., Example 1-76., 1-82
Use READMENU command to build multi-level USER key menus., Example 1-43., 1-54
Use READMENU command to build (USER) key menus., Example 1-42., 1-53
Use the multiply command to increase the, Example 1-20., 1-34
Use TS to update trace information before using, Example 1-6., 1-21
Using a predefined function as a source for another programming command., Example 1-32., 1-42
Write text at the current pen position., Example 1-73., 1-80
Write text in the title line., Example 1-72., 1-80
Write the value of a computer variable on the display., Example 1-74., 1-81
exchange
contents of trace A and trace C, 2-50
contents of traces, 2-49
sources, 2-576
traces B and C, BXC command, 2-59

XCH command, 2-576
execute
error-correction routine, 2-60
Fourier transform, 2-134, 2-174
Fourier transform, 16-bit, 2-139
list of commands, 2-172
self-test, 2-516
execute functions
at pause marker, 2-347
on keypress, (MENU), 2-345
on keypress, (USER), 2-349
when display is redrawn, 2-351
executing user-defined functions, 1-52
exponent, EXP command, 2-124
extended error query, XERR command, 2-577
extended warning, XWARN command, 2-580
external if, EXTIF command, 2-126
external memory
consumed by LIMISAV command, D-1
consumed by NSTATE command, D-1
consumed by SAVED command, D-1
consumed by SAVES command, D-1
consumed by SAVET command, D-1
consumed by SAVEU command, D-1
consumed by STOR command, D-1
external mixer
automatically bias, 2-238
bias, 2-237, 2-241
to select band for, 2-149, 2-161, 2-162
External-Mixer Functions
BLANKFT, BNKSTRT On Off, 2-54
CF, CENTER, 2-72
CNVLOSS, CONV LOSS, 2-80
FALIMIT, LIMSTRT On Off, 2-130
FA, START, 2-129
FB, STOP, 2-132
FLIMIT, FRQ LIM On Off, 2-140
FOFFSET, FREQ OFFSET, 2-141
FS, FULL SPAN, 2-148
FULBAND, fulband KAQUVE, 2-149
HNLOCK, LOCK HARMNC#, 2-161
HNLOCK, LOCK H# On Off, 2-161
LOSTART, LCL OSC START, 2-233
LOSTOP, LCL OSC STOP, 2-235
MBIAS, BIAS On Off, 2-237
MBIASPK, BIAS PK START, 2-238
MBMAX, BIAS PK MAX, 2-239
MBMIN, BIAS PK MIN, 2-240
MBRES, BIAS PK RES, 2-241
SP, SPAN, 2-466
SS, CF STEP AutoMan, 2-488
external noise source drive, XNOISE command, 2-578
`External ref (100 MZ)`, hardware broken error, 7017, 3-27
external video switch control, EXTVID command, 2-127

**F**

factory-use only errors 9000 – 9999, 3-36
false signal, return zero if, 2-166
fast Fourier transform
FFT command, 2-134
kernal, FFTKNL command, 2-139
faulty syntax, finding, 2-95
feedthrough blanking, local oscillator, 2-54
FETCH command, 2-133
`FFS handshake`, hardware broken error, 7008, 3-25
`FFS is unlocked`, hardware broken error, 7010, 3-26
`FFS won't tune high`, hardware broken error, 7042, 3-31
`FFS won't tune high`, hardware warning error, 6004, 3-22
`FFS won't tune low`, hardware broken error, 7041, 3-31
`FFS won't tune low`, hardware warning error, 6003, 3-22
`FFS won't unlock`, hardware broken error, 7048, 3-32
`File already exists`, operating error, 2052, 3-20
`File not found`, operating error, 2051, 3-20
find faulty syntax, 2-95
firmware
date code, returning, 2-439
identification, IDN command, 2-170
`Firmware Changed`, hardware warning error, 6805, 3-24
`First LO unleveled`, hardware broken error, 7002, 3-25
flat top, store a weighting algorithm, 2-545
`Float pt overflow`, computation error, 8001, 3-35
`Float pt underflow`, computation error, 8999, 3-35
formatting
memory device, FORMAT command, 2-142
the computer, 1-28
trace-data output to the controller, 1-26
trace data, TDF command, 2-513
Fourier transform, 2-134, 2-174
Fourier transform, execute 16-bit, 2-139
four rules for trace math, 1-35
`Freq board adjust`, hardware broken error, 7043, 3-31
`freq reference`, hardware warning error, 6016, 3-24
frequencies above 22 GHz, measuring, 2-140

frequency
analyze distribution of signals by, 2-376
band, selecting external-mixing, 2-149
difference between #2 and #3 markers, 2-269
limit, FLIMIT command, 2-140
limit start, 2-130
offset, FOFFSET command, 2-141
of limit-line segment, 2-208
sort signals by, 2-378
span, set to difference of markers, 2-307
span, SP command, 2-466
units, FREQU command, 2-143
full band, FULBAND command, 2-149
full span, FS command, 2-148
FUNCDEF, command; consume internal memory, D-1
functions
assign to (USER) key, 2-192
create new, 1-4

**G**

gain compression, 2-317, 2-318
`Gain hardware error`, hardware warning error, 6012, 3-23
general reference marker
set to specific amplitude, 2-278
set to specific frequency, 2-280
graphics
carriage-return/line-feed, 2-517
clear display, 1-73
commands, assign number to, 2-187
define alternate scale, 2-117
deleting from memory, 2-97
display grid, 1-81, 1-91, 1-92, 2-158
display text, 1-80, 1-91, 1-92
display trace data, 1-82, 1-86, 2-154
display variable, 1-80, 1-81
draw objects, 1-73, 1-76
inverse video, 2-519
item, modify shape of stored, 2-528
line type, 2-226
marker, 1-74, 1-91, 1-92
need for carriage-return/line-feed, 1-74
parameters, default, 2-76
scale and position of, 1-76, 1-79, 1-82, 1-91, 2-455, 2-533
to erase, 1-80, 1-81, 1-88, 1-91
to view or blank, 2-571
window, 2-117
window, scale trace data displayed in, 2-533
Graphics Functions
ANNOFF, LOCKOUT ANOTATN, 2-38
CHEIGHT, No Menu Key, 2-74
CLRDSP, No Menu Key, 2-76
CWIDTH, No Menu Key, 2-93
DELETE, No Menu Key, 2-97
DISPU, PURGE FILE, 2-105
DSPLY, No Menu Key, 2-111
DWINDOW, No Menu Key, 2-117
GRAPH, No Menu Key, 2-154
GRID, No Menu Key, 2-158
IT, No Menu Key, 2-187
LINES, LINES On Off, 2-225
LINET, No Menu Key, 2-226
MK, No Menu Key, 2-261
OP, No Menu Key, 2-353
OR, No Menu Key, 2-359
PA, No Menu Key, 2-365
PD, No Menu Key, 2-372
PEN, No Menu Key, 2-382
PERSIST, PERSIST On Off, 2-386
PR, No Menu Key, 2-396
PU, No Menu Key, 2-409
SCALE, No Menu Key, 2-455
TEXT, No Menu Key, 2-517
TITLE, TITLE, 2-526
TP, No Menu Key, 2-528
TRCOND, No Menu Key, 2-533
VW, No Menu Key, 2-571
graph trace, GRAPH command, 2-154
graticule blanking, GRAT command, 2-156
graticule scroll, GRATSCRL command, 2-157
grid, drawing a, 2-158

**H**

Hamming, store a weighting algorithm, 2-545
Hanning, store a weighting algorithm, 2-545
hardware
broken errors 7000 – 7999, 3-25
warning errors 6000 – 6999, 3-22
hardware broken error
7000, `ROM Check error`, 3-25
7001, `LO unleveled`, 3-25
7002, `First LO unleveled`, 3-25
7003, `Second LO unlocked`, 3-25
7004, `300 MHz error`, 3-25
7005, `321.4 MHz error`, 3-25
7006, `21.4 MHz error`, 3-25
7007, `Cal error`, 3-25
7008, `FFS handshake`, 3-25
7009, `ROM 2 check error`, 3-26
7010, `FFS is unlocked`, 3-26
7011, `125 KZ to FFS`, 3-26
7012, `Cannot lock YTO`, 3-26
7013, `Can't finetune YTO`, 3-26
7014, `12.5 MZ to YTO LK BD`, 3-27
7015, `YTO unleveled`, 3-27
7016, `YTO is unlocked`, 3-27

7017, External ref (100 MZ), 3-27
7018, 50 MZ to sampler, 3-27
7019, 300 MZ post fltr det, 3-28
7020, 300 MZ AGC, 3-28
7021, 600 MZ doubler level, 3-28
7022, Low idler range, 3-28
7023, High idler range, 3-28
7024, Tune DAC, 3-29
7025, Decade span atten, 3-29
7026, Binary span atten, 3-29
7027, Sweep dac, 3-29
7028, Correction dac, 3-29
7029, Video proc: 0 volt, 3-30
7030, Video proc: 2 volt, 3-30
7031, Idler is unlocked, 3-30
7032, Oven RF error, 3-30
7033, Power supply error, 3-30
7034, Dist amp A error, 3-30
7035, Dist amp B error, 3-31
7036, HP-MSIB error, 3-31
7041, FFS won't tune low, 3-31
7042, FFS won't tune high, 3-31
7043, Freq board adjust, 3-31
7044, YTO tuning range, 3-32
7045, 10 MHz out error, 3-32
7046, Illegal bandslct cde, 3-32
7047, RAM failure, 3-32
7048, FFS won't unlock, 3-32
7050, Hardware config fail, 3-32
7073, Tune+Span disconnect, 3-33
7074, Discriminator unlock, 3-33
7075, LOLA unleveled, 3-33
7076, MULT unleveled, 3-33
7077, YTF drive error, 3-33
7078, Tune/Span error, 3-33
7079, EEPROM check error, 3-33
7801, Optical atten failed, 3-33
7802, ADC error, 3-33
7803, Power meter failed, 3-34
7804, Self test failed, 3-34
7805, Zeroing error, 3-34
Hardware config fail, hardware broken error, 7050, 3-32
Hardware not present
error, 2-90, 2-411
Error 2032, 2-370, 2-371
error, EXTVID command, 2-127
HARDWARE NOT PRESENT error, 2-100
Hardware not present, operating error, 2032, 3-17
hardware warning error
6000, EAROM unprotected, 3-22
6001, Confidence test passed, 3-22
6002, A6 RAM checksum (battery), 3-22
6003, FFS won't tune low, 3-22
6004, FFS won't tune high, 3-22
6005, Idler tuning range, 3-22
6006, YTO tuning range, 3-22
6007, MSIB NMAA received, 3-22
6008, Confidence test failed, 3-23
6009, No module label, 3-23
6010, Err in MDOC response, 3-23
6011, RBW hardware error, 3-23
6012, Gain hardware error, 3-23
6013, LOGAMP hardware error, 3-23
6014, PLL error, 3-23
6015, Oven cold, 3-23
6016, freq reference, 3-24
6017, 6214 GHz error, 3-24
6018, PGA gain sum high, 3-24
6019, PGA gain sum low, 3-24
6802, Invalid cal data, 3-24
6805, Firmware Changed, 3-24
harmonic
lock, HNLOCK command, 2-161
start, NSTART command, 2-337
start (SIGID start frequency), 2-337
stop, NSTOP command, 2-341
stop (SIGID stop frequency), 2-341
height of character, 2-74
Hertz, convert from position units, 2-143
High idler range, hardware broken error, 7023, 3-28
hold, HD command, 2-160
horizontal graticule, control display of annotation for, 2-582
horizontal graticule lines, control positioning of, 2-157
HP 70900B local oscillator source switches, 1-9
HP 70900 sweep, ASWP command, 2-42
HP 8566B Compatibility Functions
DA, No Menu Key, 2-94
KS~ command, KS, 2-196
HP 8566 emulation mode, 2-163
HP-IB
annunciators, A-2
cable length, A-1
description of, A-1
front panel indicators, 1-17
illegal addresses, 1-8
interface, A-1
ON/OFF switch, 1-8, 1-10
receive data from, 2-120
release control of, 2-432
requirements for HP-IB operation, 1-8
select code, A-1
select code and address, A-1
send message to device, OUTPUT command, 2-361

setting address switches, 1-8
set-up procedure, 1-7
spectrum analyzer address, A-1
spectrum analyzer as controller on, 1-70, 1-71
spectrum analyzer response to, B-1
status annunciators, A-2
status indicators, A-2
storing files in, 2-330
system-level commands, A-3
to set address with front panel controls, 1-11
to set address with module switches, 1-9, 1-11
HP-IB bus error, operating error, 2045, 3-19
HP-IB multiple cntlr, operating error, 2036, 3-18
HP-IB;requirements for HP-IB operation, 1-7, 1-11
HP-MSIB
addresses of modules, displaying, 2-113
address switches, 1-10
identify module at address, 2-324, 2-325
return module address, 2-321, 2-323
setting address switches, 1-8
storing files in, 2-330
HP-MSIB addr 70600, diagnostics error, 0012, 3-4
HP-MSIB addr 70700, diagnostics error, 0015, 3-4
HP-MSIB addr 70902, diagnostics error, 0002, 3-2
HP-MSIB addr 70903, diagnostics error, 0003, 3-2
HP-MSIB addr 70904, diagnostics error, 0004, 3-2
HP-MSIB addr 70905/6, diagnostics error, 0005, 3-3
HP-MSIB addr 70907, diagnostics error, 0010, 3-3
HP-MSIB address
error message, source of, 3-1
HP-MSIB error, hardware broken error, 7036, 3-31

## I

identification
ID command, 2-164
number, IDN command, 2-170
identified signal
frequency, IDFREQ command, 2-166
to center frequency, IDCF command, 2-165
identify
item, IT command, 2-187
module or instrument at HP-MSIB address, 2-324
Idler is unlocked, hardware broken error, 7031, 3-30
Idler is unlocked, operating error, 2028, 3-17
Idler tuning range, hardware warning error, 6005, 3-22
IF 321.4 MHz port
to external device, 2-126
if ... then, 1-47
IF step gain, ability to control, 2-426
IF/THEN
measurement example, 1-47
if/then/elsif/else/endif, IF/THEN command, 2-172
illegal addresses, HP-IB, 1-8
Illegal bandslct cde, hardware broken error, 7046, 3-32
Illegal Cal signal, operating error, 2023, 3-16
Illegal character, operating error, 2004, 3-13
Illegal character set, operating error, 2005, 3-13
Illegal command, operating error, 2001, 3-13
Illegal HP-MSIB comm, operating error, 2024, 3-16
Illegal in bypass, operating error, 2803, 3-21
Illegal in LW mode, operating error, 2802, 3-21
Illegal marker type, operating error, 2019, 3-16
illegal operation error, 2-94, 2-196
Illegal operation, operating error, 2035, 3-18
illegal operations, 1-55
Illegal parameter, operating error, 2002, 3-13
image-identification routine, 2-337
impedance, specify value of input, 2-179
improving amplitude accuracy, 2-395
Incorrect System, diagnostics error, 0014, 3-4
Information Functions
CATALOG, catalog && MSI, 2-69
CONFIG, CONFIG, 2-86
DSPTEXT, No Menu Key, 2-115
ERASE, ERASE ALL, 2-122
ERR, No Menu Key, 2-123
HP, 66 MODE On Off, 2-163
ID, No Menu Key, 2-164
IDN, ROM VERSION, 2-170

INPUTMOD, No Menu Key, 2-176
IP, (I-P), 2-180
KEYPST, PRESET USER, 2-195
LIMIBEEP, BEEPER On Off, 2-202
LIMIFAIL, No Menu Key, 2-207
LIMILINE, No Menu Key, 2-211
LIMIRCL, RECALL LIMIT or LOAD FILE, 2-214
LIMITEST, LIMITS On Off, 2-221
LOAD, LOAD FILE, 2-229
MEM, catalog && MSI or INTRNL MEMORY, 2-254
MKACT, ACTIVE MARKER, 2-264
MKAL, REL LEFT, 2-265
MKA, No Menu Key, 2-262
MKAR, REL RIGHT, 2-267
MKBWA, mkr bw/ zoom bw, 2-271
MKBW, MKR BW On Off, 2-269
MKCONT, MK STOP On Off, 2-274
MKD, DELTA, 2-275
MKF, MKR NRM On Off, 2-282
MKMIN, MINIMUM POINT, 2-285
MKN, MKR NRM On Off, 2-286
MKNOISE, MKNOISE On Off, 2-288
MK, No Menu Key, 2-261
MKOFF, MKR NRM On Off, 2-290
MKPAUSE, MKPAUSE On Off, 2-293
MKP, No Menu Key, 2-291
MKPX, PEAK EXCURSN, 2-298
MKREAD, readout, 2-300
MKRELPWR, REL POWER, 2-302
MKRINSYS, RIN, 2-304
MKSP, Δ ▸ SPAN, 2-307
MKSTOP, MK STOP On Off, 2-309
MKT, No Menu Key, 2-310
MKTRACE, MARKER TRACE A, 2-312
MKTRACK, SIG TRK On Off, 2-313
MKTV, SIG TRK LIMIT, 2-314
MKTYPE, No Menu Key, 2-316
MODADD, No Menu Key, 2-321
MODID, No Menu Key, 2-324
MSG, No Menu Key, 2-329
NSTATE, NO. OF STATES, 2-339
PERASE, PARTIAL ERASE, 2-384
PLOT, No Menu Key, 2-388
PSTATE, P STATE On Off, 2-408
RCLS, RECALL STATE or LOAD FILE, 2-423
REV, ROM VERSION, 2-439
SAVES, SAVE STATE, 2-451
SER, STATE, 2-457
STATE, No Menu Key, 2-494
STB, No Menu Key, 2-495
TEST, ANALYZR TEST, 2-516
TRPST, TRACE PRESET, 2-541
TRSTAT, No Menu Key, 2-542
USERERR, No Menu Key, 2-547
USERKEY, SAVE USERKEY, 2-549
USERLOCK, No Menu Key, 2-550
USERMSG, No Menu Key, 2-551
XERR, No Menu Key, 2-577
ZOOMRB, ZOOM TO RES BW, 2-586
initialize spectrum analyzer state, 1-18
initial program considerations, 1-18
input
  maximum, 2-256
  reference number for, 2-176, 2-177
input attenuation
  AT command, 2-43
  optical, 2-354
input impedance
  INZ command, 2-179
  specify value of, 2-179
input-port number ▸ module number, INPUTMOD command, 2-176
installation for remote operation, 1-7
installing
  the plotter, 1-7
  the printer, 1-7
instrument
  control behavior, receiver or spectrum analyzer, 2-426
  identifing at HP-MSIB address, 2-324
  preset, commands executed by, 2-180
  preset, IP command, 2-180
  returning serial number of, 2-457
  settings, control of, 1-15
  settings, recalling, 2-423
  settings, saving, 2-451
  state, returning all, STATE command, 2-494
  window, 1-82
  window, coordinates, 2-353
  window, IWINDOW command, 2-190
instrument preset
  presetting analog to digital converter, 2-367
integer
  INT command, 2-178
  values, computing, 2-178
Integer overflow, computation error, 8004, 3-35
interaction of programming commands and memory, D-1
interactive, building set of key functions, 2-428
interdependent commands, definition, 2-2
internal memory
  consumed by ACTDEF command, D-1

consumed by AMPCOR command, D-1
consumed by FUNCDEF command, D-1
consumed by LIMILINE command, D-1
consumed by LIMISAV command, D-1
consumed by LOAD command, D-1
consumed by NSTATE command, D-1
consumed by ONEOS command, D-1
consumed by ONMENU command, D-1
consumed by ONMKR command, D-1
consumed by ONUSER command, D-1
consumed by ONWINDOW command, D-1
consumed by PDA command, D-1
consumed by PDF command, D-1
consumed by RCLD command, D-1
consumed by READMENU command, D-1
consumed by REPEAT command/UNTIL, D-1
consumed by SAVES command, D-1
consumed by SAVET command, D-1
consumed by SAVEU command, D-1
consumed by STOR command, D-1
consumed by TRDEF command, D-1
consumed by USERERR command, D-1
consumed by USERMSG command, D-1
consumed by USTATE command, D-1
consumed by VARDEF command, D-1
erasing, 2-102, 2-122, 2-384
load article or file into, 2-229
protecting contents of, 2-400
return amount of, 2-254
return/receive data that configures, 2-555
storing files in, 2-330
storing user-defined variables in, 2-558
interrupting user-defined function, 2-437
interrupt process, 1-64
`Invalid cal data`, hardware warning error, 6802, 3-24
IP command
presetting analog to digital converter, 2-367
(I-P), IP command, 2-180
IT, command, 1-86, 1-92
item, 2-187
`Item not found`, operating error, 2013, 3-15
items, IT command, 1-87
item types, 1-91
IWINDOW, command, 1-82

**J**

join two traces, 2-84

**K**

keep specified number of sweeps on screen, 2-386
key functions, building set of interactive, 2-428
keys
recalling, 2-422
storing, 2-450
KS 126 (same as KS~), KS~ command, 2-196

**L**

label, assign to (USER) key, 2-192
`Label too long`, operating error, 2016, 3-15
laser relative intensity noise, 2-304
last segment, limit line, 2-203
`LC bandwidths`, diagnostics error, 0022, 3-5
`LC board`, diagnostics error, 0032, 3-6
level control, selecting internal or external, 2-469
level of display line, 2-108
LG, LN, and DETSEL, control coupling between, 2-92
lightwave
select input path wavelength, 2-197
signal, relative amplitude, 2-302
system's, returning responsivity of, 2-448
Lightwave Functions
OPTATN, ATTEN, 2-354
OPTMODE, LW MODE OPT ELEC, 2-356
OPTPWR command, PWR BAR On Off, 2-357
PWRBAR, PWR BAR On Off, 2-413
PWRMODE, PWR MTR OptElec, 2-418
RSPSVTY, RSPSVTY, 2-448
LIMILINE, command; consume internal memory, D-1
LIMISAV, command; consume internal memory, D-1
LIMISAV, command; consumes external memory, D-1
limit
external mixing, 2-161
front panel operation to (USER) keys, 2-550
start frequency, FALIMIT command, 2-130
limit line
activate next segment, 2-213
amplitude, LIMIAMP command, 2-200
as amplitude correction data, 2-88
beep, LIMIBEEP command, 2-202
data to amplitude correction data, LIMTOCOR command, 2-224
delete, LIMIDEL command, 2-204
editing done, LIMIDONE command, 2-205
editor, LIMIEDIT command, 2-206
editor off, 2-205

editor on, 2-206
fail, LIMIFAIL command, 2-207
frequency, LIMIFREQ command, 2-208
half, LIMIHALF command, 2-210
LIMILINE command, 2-211
load into limit-line table, 2-214
parameters, 2-221
recall, LIMIRCL command, 2-214
relative, LIMIREL command, 2-215
save, LIMISAV command, 2-216
scroll active segment, 2-217
segment, define slope and offset of, 2-219
segment, delete, LIMISDEL command, 2-218
segment, frequency, 2-208
segment, LIMISEG command, 2-219
specify type, 2-223
storing, 2-450
table, load limit line, 2-214
table, save contents of, 2-216
test, LIMITEST command, 2-221
to build a new, 2-211
to clear table, 2-204
to return test results, 2-207
to select test limits, 2-211
type, LIMITYPE command, 2-223
values absolute or relative, 2-215
linear
LN command, 2-228
scale, 2-228
`LINEAR not allowed`, operating error, 2043, 3-19
LINES command, 2-225
line type, LINET command, 2-226
lithium battery, 3.6 V, nonvolatile memory, 1-56
load
article or file into internal memory, 2-229
LOAD command, 2-229
stored limit line, 2-214
LOAD, command; consume internal memory, D-1
local and remote control indicators, 1-17
LOCAL, command, A-2
local oscillator
feedthrough blanking, 2-54
start frequency, 2-233
start frequency, LOSTART command, 2-233
stop frequency, LOSTOP command, 2-235
lock annotations off, ANNOFF command, 2-38
LO feedthrough, avoiding, 2-130
`LOGAMP hardware error`, hardware warning error, 6013, 3-23
`Log amplifier`, diagnostics error, 0029, 3-6
`Log amplifier`, diagnostics error, 0039, 3-8
logarithmic scale, LG command, 2-198
logarithm, LOG command, 2-231
`Log board`, diagnostics error, 0033, 3-7
`Log of negative`, computation error, 8003, 3-35
`Log of zero`, computation error, 8002, 3-35
`LOLA unleveled`, hardware broken error, 7075, 3-33
LO OUT port
control of, 2-233, 2-236
`LO unleveled`, hardware broken error, 7001, 3-25
lowest signal, move marker to, 2-285
`Low/high band switch`, diagnostics error, 0044, 3-9
`Low idler range`, hardware broken error, 7022, 3-28
LSN, command, 1-17, A-2

## M

maintain marked signal at center frequency, 2-313
making noise figure measurements, XNOISE command, 2-578
manual page, definition, 2-1
marker
active, MKACT command, 2-264
amplitude left, MKAL command, 2-265
amplitude right, MKAR command, 2-267
bandwidth amplitude, MKBWA command, 2-271
bandwidth, MKBW command, 2-269
continue, sweep past, MKCONT command, 2-274
delta active, MKDACT command, 2-277
delta, MKD command, 2-275
delta reference amplitude, MKDREFA command, 2-278
delta reference frequency, MKDREFF command, 2-280
display noise bandwidth at, 2-288
end sweep at, 2-309
minimum, MKMIN command, 2-285
move to lowest signal, 2-285
move to reference level, 2-306
normal, MKN command, 2-286
off, MKOFF command, 2-290
pause sweep at, MKPAUSE command, 2-293
pit excursion, MKPITX command, 2-294
readout, MKREAD command, 2-300
relative intensity noise, MKRINSYS command, 2-304

relative power mode, MKRELPWR command, 2-302
return amplitude, MKA command, 2-262
return frequency, 2-282
return noise bandwidth at, 2-288
set to frequecny or return value of, MKFABS command, 2-284
span, MKSP command, 2-307
stop, MKSTOP command, 2-309
time, MKT command, 2-310
to center frequency, MKCF command, 2-273
to center frequency step size, MKSS command, 2-308
to reference level, MKRL command, 2-306
trace, MKTRACE command, 2-312
tracking, MKTRACK command, 2-313
tracking variance, MKTV command, 2-314
turn on/off, 2-290
type, MKTYPE command, 2-316
marker frequency
absolute, MKFABS command, 2-284
center-frequency step size to, 2-308
difference between #2 and #3, 2-269
MKF command, 2-282
setting center frequency to, 2-273
Marker Functions
MKACT, ACTIVE MARKER, 2-264
MKAL, REL LEFT, 2-265
MKA, No Menu Key, 2-262
MKAR, REL RIGHT, 2-267
MKBWA, mkr bw/ zoom bw, 2-271
MKBW, MKR BW On Off, 2-269
MKCF, ▸ CF, 2-273
MKCONT, MK STOP On Off, 2-274
MKDACT, No Menu Key, 2-277
MKD, DELTA, 2-275
MKDREFA, No Menu Key, 2-278
MKDREFF, No Menu Key, 2-280
MKFABS, No Menu Key, 2-284
MKF, MKR NRM On Off, 2-282
MKMIN, MINIMUM POINT, 2-285
MKN, MKR NRM On Off, 2-286
MKNOISE, MKNOISE On Off, 2-288
MK, No Menu Key, 2-261
MKOFF, MKR NRM On Off, 2-290
MKPABS, No Menu Key, 2-292
MKPAUSE, MKPAUSE On Off, 2-293
MKPITX, PIT EXCURSN, 2-294
MKPK, HIGHEST PEAK, 2-296
MKP, No Menu Key, 2-291
MKPX, PEAK EXCURSN, 2-298
MKREAD, readout, 2-300
MKRELPWR, REL POWER, 2-302
MKRINSYS, RIN, 2-304
MKRL, ▸ REF, 2-306
MKSP, Δ ▸ SPAN, 2-307
MKSS, ▸ CF STEP, 2-308
MKSTOP, MK STOP On Off, 2-309
MKT, No Menu Key, 2-310
MKTRACE, MARKER TRACE A, 2-312
MKTRACK, SIG TRK On Off, 2-313
MKTV, SIG TRK LIMIT, 2-314
MKTYPE, No Menu Key, 2-316
marker peak
display frequency difference X dB below, 2-271
excursion, MKPX command, 2-298
MKPK command, 2-296
marker position
absolute, MKPABS command, 2-292
according to amplitude, 2-262
according to frequency, 2-282
on display, 2-261
on trace according to frequency, MKN command, 2-286
on trace in position units, MKP command, 2-291
select terms describing, MKREAD command, 2-300
markers
timing and invalid data, 1-20, 1-22
MAS/SLA (master/slave) switches, 1-9
mass storage interface, MSI command, 2-330
master, return model number of, 2-164
math
functions, variables, and trace arrays, 1-30
Math and Move Functions
ABS, No Menu Key, 2-8
ADAPBPCTL, A◂A*DL/(A+B+C), 2-14
ADAPBTL, A◂A*DL/(A+B), 2-15
ADBTL, A◂A*DL/B, 2-16
ADCTL, A◂A*DL/C, 2-19
ADD, No Menu Key, 2-20
AMB, A−B▸A On Off, 2-22
AMBMC, A◂(A−B)−C, 2-24
AMBMCPL, A◂(A−B)−C+DL, 2-25
AMBPL, A−B+DL On Off, 2-26
AMC, A−C▸A On Off, 2-28
AMCPL, A◂(A−C)+DL, 2-29
AMPU, No Menu Key, 2-33
APB, A+B▸A, 2-40
APBDCTL, A◂DL*(A+B)/C, 2-41
AVG, No Menu Key, 2-47
AXB, A XCH B, 2-49
AXC, A XCH C, 2-50
BIT, No Menu Key, 2-51
BML, B - DL ▸ B, 2-56
BTC, C◂B, 2-58
BXC, B XCH C, 2-59

COMPRESS, No Menu Key, 2-82
CONCAT, No Menu Key, 2-84
definition of, 1-34
DIV, No Menu Key, 2-106
EXP, No Menu Key, 2-124
FFT, No Menu Key, 2-134
FREQU, No Menu Key, 2-143
INT, No Menu Key, 2-178
LOG, No Menu Key, 2-231
MEAN, No Menu Key, 2-244
MEASU, No Menu Key, 2-246
MIN, No Menu Key, 2-258
MOD, No Menu Key, 2-319
MOV, No Menu Key, 2-326
MPY, No Menu Key, 2-327
MXM, No Menu Key, 2-332
PDA, No Menu Key, 2-374
PDF, No Menu Key, 2-376
PEAKS, No Menu Key, 2-378
POSU, No Menu Key, 2-390
PWRBW, No Menu Key, 2-415
RMS, No Menu Key, 2-443
SMOOTH, No Menu Key, 2-463
SQR, No Menu Key, 2-468
STDEV, No Menu Key, 2-498
SUB, No Menu Key, 2-505
SUM, No Menu Key, 2-507
TRA/TRB/TRC, No Menu Key, 2-530
TWNDOW, No Menu Key, 2-545
VARIANCE, No Menu Key, 2-560
VAVG, VID AVG On Off, 2-562
XCH, No Menu Key, 2-576
math command
process information with, 1-3
maximum
hold, MXMH command, 2-334
input level, 2-256
input level, MIL command, 2-256
mixer bias, MBMAX command, 2-239
MXM command, 2-332
MEAN command, 2-244
measure
bandwidth, position marker #2 to, 2-265
bandwidth, position marker #3 to, 2-267
detected signals, 2-78
frequencies above 22 GHz, 2-140
laser relative intensity noise, 2-304
lightwave signal modulation, 2-302
mode, MEASURE command, 2-252
take sweep, TS command, 2-543
measured power
compute bandwidth from percentage of, 2-415
measured value
returning, 2-357
measurement
data size, MDS command, 2-242
general procedure, 1-14
offsetting value of amplitude, 2-445
results, change size of, 2-190
results, control display of, 2-256
set vertical scale, 2-198
timing of, 1-20, 1-22
units, 1-30, 1-31
units, convert to parameter units, 2-33, 2-37
units, format trace data, 2-513
units, MEASU command, 2-246
measurement range
activating, 2-148
setting center frequency, 2-72
setting span of, 2-466
setting start frequency, 2-129
setting stop frequency, 2-132
setting the, 1-2
memory
contents of, 1-57, 1-58
deleting graphics, 2-97
device, erase or format, 2-142
erase all, 2-122
erase file from, 2-410
erasing internal, 2-102, 2-384
external memory consumed by LIMISAV command, D-1
external memory consumed by NSTATE command, D-1
external memory consumed by SAVED command, D-1
external memory consumed by SAVES command, D-1
external memory consumed by SAVET command, D-1
external memory consumed by SAVEU command, D-1
external memory consumed by STOR command, D-1
input/output, 2-557
interaction with programming commands, D-1
internal memory consumed by ACTDEF command, D-1
internal memory consumed by AMPCOR command, D-1
internal memory consumed by FUNCDEF command, D-1
internal memory consumed by LIMILINE command, D-1
internal memory consumed by LIMISAV command, D-1

internal memory consumed by LOAD command, D-1
internal memory consumed by NSTATE command, D-1
internal memory consumed by ONEOS command, D-1
internal memory consumed by ONMENU command, D-1
internal memory consumed by ONMKR command, D-1
internal memory consumed by ONUSER command, D-1
internal memory consumed by ONWINDOW command, D-1
internal memory consumed by PDA command, D-1
internal memory consumed by PDF command, D-1
internal memory consumed by RCLD command, D-1
internal memory consumed by READMENU command, D-1
internal memory consumed by REPEAT command/UNTIL, D-1
internal memory consumed by SAVES command, D-1
internal memory consumed by SAVET command, D-1
internal memory consumed by SAVEU command, D-1
internal memory consumed by STOR command, D-1
internal memory consumed by TRDEF command, D-1
internal memory consumed by USERERR command, D-1
internal memory consumed by USERMSG command, D-1
internal memory consumed by USTATE command, D-1
internal memory consumed by VARDEF command, D-1
limit line file, 1-56
MEM command, 2-254
nonvolatile, 3.6 V lithium battery, 1-56
program file, 1-56
return/receive data that configures, 2-555
state-register file, 1-56
to conserve, 1-62, 1-63
to display catalog, 2-113, 2-114
to erase, 1-59, 1-62
to protect, 1-59, 1-61, 1-62
to return capacity, 2-254
to return catalog, 2-115, 2-116
to select, 2-330
to store, 2-398, 2-500, 2-501
trace file, 1-56
types of, 1-56, 1-57
USER keys file, 1-56
memory card, 1-11, 1-13, 1-59
battery, 1-11, 1-13
insertion, 1-11
memory overflow error, 2-94, 2-196
`Memory overflow`, operating error, 2011, 3-14
Memory Utility
CATALOG, catalog && MSI, 2-69
DISPOSE, FORMAT, 2-102
ERASE, ERASE ALL, 2-122
FORMAT, FORMAT, 2-142
LIMIRCL, LOAD FILE or `RECALL LIMIT`, 2-214
LIMISAV, SAVE LIMIT, 2-216
LOAD, LOAD FILE, 2-229
MEM, catalog && MSI or `INTRNL MEMORY`, 2-254
MSI, INTRNL MEMORY or `HP-IB DISK` or `HP-MSIB DSK && CRD`, 2-330
NSTATE, NO. OF STATES, 2-339
PERASE, PARTIAL ERASE, 2-384
PREFX, CHANGE PREFIX, 2-398
PROTECT, No Menu Key, 2-400
PSTATE, No Menu Key, 2-408
PURGE, PURGE FILE, 2-410
RCLD, LOAD FILE or `RECALL PROGRAM`, 2-422
RCLS, LOAD FILE or `RECALL STATE`, 2-423
RCLT, RECALL TRACE or `LOAD FILE`, 2-424
RCLU, LOAD FILE or `RECALL USER` or `RECALL USERKEY`, 2-425
SAVED, SAVE PROGRAM, 2-450
SAVES, SAVE STATE, 2-451
SAVET, SAVE TRACE A, 2-453
SAVEU, SAVE USERKEY, 2-454
USTATE, No Menu Key, 2-555
Menu Key
3-DIMEN On Off, THREED command, 2-520
66 MODE On Off, HP command, 2-163
A+B▶A, APB command, 2-40
ACTIVE MARKER, MKACT command, 2-264
alc/track, SRCALC command, 2-469
A◀A*DL/(A+B+C), ADAPBPCTL command, 2-14
A◀A*DL/B, ADBTL command, 2-16

A◀A*DL/C, ADCTL command, 2-19
A◀(A−B)−C, AMBMC command, 2-24
A◀(A−B)−C+DL, AMBMCPL command, 2-25
A◀(A−C)+DL, AMCPL command, 2-29
A◀DL*(A+B)/C, APBDCTL command, 2-41
AMETER ON OFF, AMETER command, 2-30
AM FREQ, SRCAMF command, 2-472
AM INT EXT, SRCMOD command, 2-476
A−B+DL On Off, AMBPL command, 2-26
A−B▶A On Off, AMB command, 2-22
A−C▶A On Off, AMC command, 2-28
AM % On Off, SRCAM command, 2-470
AMPCOR On Off, AMPCOR command, 2-31
AMP REF OFFSET, ROFFSET command, 2-445
AMPTD VALUE, LIMIAMP command, 2-200
ANALYZR TEST, TEST command, 2-516
ANOTATN On Off, ANNOT command, 2-39
ATTEN AutoMan, AT command, 2-43
ATTEN, OPTATN command, 2-354
A XCH B, AXB command, 2-49
A XCH C, AXC command, 2-50
B-DL▶B, BML command, 2-56
BEEPER On Off, LIMIBEEP command, 2-202
BIAS On Off, MBIAS command, 2-237
BIAS PK MAX, MBMAX command, 2-239
BIAS PK MIN, MBMIN command, 2-240
BIAS PK RES, MBRES command, 2-241
BIAS PK START, MBIASPK command, 2-238
BLANK A, BLANK command, 2-53
BLANKNG On Off, SRCBLNK command, 2-475
BNKSTRT On Off, BLANKFT command, 2-54
BW, Swp, TM command, 2-527
B XCH C, BXC command, 2-59
CAL ALL, CAL command, 2-60
cal enable, CALCOR command, 2-61
CAL SRC INT EXT, CALSRC command, 2-67
catalog && MSI, CATALOG command, 2-69
catalog && MSI or `INTRNL MEMORY`, MEM command, 2-254
CENTER, CF command, 2-72
CENTER DELTA, PCDELTA command, 2-371
CF STEP AutoMan, SS command, 2-488
CHANGE PREFIX, PREFX command, 2-398
CLEAR WRT A, CLRW command, 2-78
C◀B, BTC command, 2-58
CONFIG, CONFIG command, 2-86
CONFIRM RESTART, STARTUP command, 2-492
CONT SWEEP, CONTS command, 2-87
CONV LOSS, CNVLOSS command, 2-80
COUPLNG AC DC, COUPLE command, 2-89
CPL AVG On Off, CPLAVG command, 2-90
CPL DET On Off, CPLDET command, 2-92
DEBUG On Off, DEBUG command, 2-95
DEFINE USR KEY, KEYDEF command, 2-192
DELETE ALL, LIMIDEL command, 2-204
DELETE SEGMENT, LIMISDEL command, 2-218
DELTA, MKD command, 2-275
DETECTR AutoMan, DET command, 2-98
DET SEL LOG V, DETSEL command, 2-100
DSP LIN On Off, DL command, 2-108
enter limit, LIMIEDIT command, 2-206
enter limit, LIMILINE command, 2-211
enter limit, LIMISEG command, 2-219
ERASE ALL, ERASE command, 2-122
EXT IF On Off, EXTIF command, 2-126
EXT VID FM IQ, EXTVID command, 2-127
FORMAT, DISPOSE command, 2-102
FORMAT, FORMAT command, 2-142
FREQ FOR CAL, CALFREQ command, 2-63
FREQ OFFSET, FOFFSET command, 2-141
FREQ VALUE, LIMIFREQ command, 2-208
FRQ LIM On Off, FLIMIT command, 2-140
fulband KAQUVE, FULBAND command, 2-149
FULL SPAN, FS command, 2-148
GRAT On Off, GRAT command, 2-156
GRATSCR On Off, GRATSCRL command, 2-157
HIGHEST PEAK, MKPK command, 2-296
HOLD, HD command, 2-160
HORZ OFFSET, THREEDH command, 2-522
HYS LEVEL, VTH command, 2-569
IMAGE N START, NSTART command, 2-337
IMAGE N STOP, NSTOP command, 2-341
IMAGE SHIFT, IDMODE command, 2-168
INPUT IMPED, INZ command, 2-179
INTRNL MEMORY or `HP-IB DISK` or `HP-MSIB DSK && CRD`, MSI command, 2-330
KS, KS~ command, 2-196
LABEL Y On Off, YLABELS command, 2-582
LAST SEGMENT, LIMIBOT command, 2-203

LCL OSC START, LOSTART command, 2-233
LCL OSC STOP, LOSTOP command, 2-235
LENGTH A, TRDEF command, 2-535
LIMITS On Off, LIMITEST command, 2-221
lim ⟷ ampcor, CORTOLIM command, 2-88
lim ⟷ ampcor, LIMTOCOR command, 2-224
LIMSTRT On Off, FALIMIT command, 2-130
LINEAR, LN command, 2-228
LINES On Off, LINES command, 2-225
LOAD FILE or `RECALL PROGRAM`, RCLD command, 2-422
LOAD FILE or `RECALL TRACE`, LOAD or RCLT command, 2-229
LOAD FILE or `RECALL USER` or `RECALL USERKEY`, RCLU command, 2-425
LOCK HARMNC#, HNLOCK command, 2-161
LOCK H# On Off, HNLOCK command, 2-161
LOCKOUT ANOTATN, ANNOFF command, 2-38
LOG dB/DIV, LG command, 2-198
LW MODE OPT ELEC, OPTMODE command, 2-356
MARKER TRACE A, MKTRACE command, 2-312
MAX HOLD A, MXMH command, 2-334
MAX IN AutoMan, MIL command, 2-256
MAX MXR LEVEL, ML command, 2-317
MIN HOLD A, MINH command, 2-260
MINIMUM POINT, MKMIN command, 2-285
MKNOISE On Off, MKNOISE command, 2-288
MKPAUSE On Off, MKPAUSE command, 2-293
MKR BW On Off, MKBW command, 2-269
mkr bw/ zoom bw, MKBWA command, 2-271
MKR NRM On Off, MKF command, 2-282
MKR NRM On Off, MKN command, 2-286
MKR NRM On Off, MKOFF command, 2-290
MK STOP On Off, MKCONT command, 2-274
MK STOP On Off, MKSTOP command, 2-309
NEXT SEGMENT, LIMINEXT command, 2-213
Noise On Off, XNOISE command, 2-578
NO. OF STATES, NSTATE command, 2-339
NORM On Off, NORM command, 2-335
OVERSWP On Off, OVRSWP command, 2-363
PARTIAL ERASE, PERASE command, 2-384
PATHLOK On Off, PATHLOCK command, 2-368
PAUSE, PAUSE command, 2-369
PEAK EXCURSN, MKPX command, 2-298
PERSIST On Off, PERSIST command, 2-386
PIT EXCURSN, MKPITX command, 2-294
POWER FOR CAL, CALPWR command, 2-65
poweron menu, POWERON command, 2-394
PREAMP On Off, PREAMP command, 2-397
PRESEL CENTER, PC command, 2-370
PRESEL DAC, PRSDAC command, 2-404
PRESEL HYS, PRSHYST command, 2-407
PRESEL On Off, PRSENABL command, 2-406
PRESEL PEAK, PP command, 2-395
preset adc, PADC command, 2-367
preset input, PINPUT command, 2-387
PRESET USER, KEYCLR command, 2-191
PRESET USER, KEYPST command, 2-195
P STATE On Off, PSTATE command, 2-408
PURGE FILE, DISPU command, 2-105
PURGE FILE, PURGE command, 2-410
PWR AVG On Off, PWRAVG command, 2-411
PWR BAR On Off, OPTPWR command, 2-357
PWR BAR On Off, PWRBAR command, 2-413
PWR BAR On Off, PWRBARON command, 2-414
PWR MTR OptElec, PWRMODE command, 2-418
PWR STP AutoMan, SRCPSTP command, 2-479
PWR SWP On Off, SRCPSWP command, 2-481
RB/SPAN RATIO, RBR command, 2-421
readout, MKREAD command, 2-300
RECALL LIMIT or `LOAD FILE`, LIMIRCL command, 2-214
RECALL STATE or `LOAD FILE`, RCLS command, 2-423
RECALL TRACE or `LOAD FILE`, RCLT or LOAD command, 2-424
REF LVL POSN, RLPOS command, 2-442

REF LVL, RL command, 2-440
RELATIVE On Off, LIMIREL command, 2-215
release adc, RELADC command, 2-430
release module, RELMOD command, 2-433
REL LEFT, MKAL command, 2-265
REL POWER, MKRELPWR command, 2-302
REL RIGHT, MKAR command, 2-267
RES BW AutoMan, RB command, 2-419
▸ CF, MKCF command, 2-273
▸ CF STEP, MKSS command, 2-308
▸ REF, MKRL command, 2-306
RIN, MKRINSYS command, 2-304
ROM VERSION, IDN command, 2-170
ROM VERSION, REV command, 2-439
RSPSVTY, RSPSVTY command, 2-448
SAVE LIMIT, LIMISAV command, 2-216
SAVE LIMIT or `SAVE PROGRAM` or `SAVE TRACE A` or `SAVE STATE` or `SAVE USERKEY`, STOR or SAVET command, 2-500
SAVE PROGRAM, SAVED command, 2-450
SAVE STATE, SAVES command, 2-451
SAVE TRACE A, SAVET command, 2-453
SAVE TRACE A, STOR or SAVET command, 2-500
SAVE USERKEY, SAVEU command, 2-454
SAVE USERKEY, USERKEY command, 2-549
select adc, ADC command, 2-17
select input, INPUT command, 2-175
SIG ID AMPTD Δ, SIGDEL command, 2-461
SIG ID MAN OFF, SIGID command, 2-462
SIG ID ▸ CF, IDCF command, 2-165
SIGNAL IDENT, SIGID command, 2-462
SIG TRK LIMIT, MKTV command, 2-314
SIG TRK On Off, MKTRACK command, 2-313
SINGLE SWEEP, SNGLS command, 2-465
SINGLE SWEEP, TS command, 2-543
SPAN, SP command, 2-466
SRC ATN AutoMan, SRCAT command, 2-473
SRC OSC INT EXT, SRCOSC command, 2-477
SRC PWR OFFSET, SRCPOFS command, 2-478
SRC PWR On Off, SRCPWR command, 2-483
START, FA command, 2-129
STATE, SER command, 2-457
STM RSP On Off, MEASURE command, 2-252
STOP, FB command, 2-132
STPGAIN AutoMan, SG command, 2-459
SWPTIME AutoMan, ST command, 2-490
SYS COR On Off, SYSCOR command, 2-512
THRESHD On Off, TH command, 2-519
TITLE, TITLE command, 2-526
trace norm, STORREF command, 2-502
TRACE PRESET, TRPST command, 2-541
TRACKNG ADJUST, SRCTK command, 2-484
TRACKNG PEAK, SRCTKPK command, 2-486
TRIGGE DELAY, TRIGDEL command, 2-539
type, LIMITYPE command, 2-223
Δ ▸ SPAN, MKSP command, 2-307
units menu, AUNITS command, 2-45
UPPER/LOWER, LIMIHALF command, 2-210
USR PWR On Off, USRPWR command, 2-554
VBW CPL Rx SA, RCVRMODE command, 2-426
VBW/RBW RATIO, VBR command, 2-565
VERT OFFSET, THREEDV command, 2-524
VID AVG On Off, VAVG command, 2-562
VID BW AutoMan, VB command, 2-564
VIDEO LEVEL, VTL command, 2-570
VID LIN On Off, VTDL command, 2-567
VIEW (A,B,C) BLANK (A,B,C), TRDSP command, 2-538
VIEW A, VIEW command, 2-566
WARNCTRL On Off, USERWARN command, 2-552
WARNCTRL On Off, WARN command, 2-573
WARNCTRL On Off, WARNCTRL command, 2-575
WARNCTRL On Off, XWARN command, 2-580
ZERO, ZERO command, 2-584
ZOOM TO RES BW, ZOOMRB command, 2-586
(MENU) keypress to execute functions, 2-345
MENU keys
  input/output, 2-550
message area, 2-551
  return contents, 2-329
message, MSG command, 2-329
minimum
  hold, MINH command, 2-260
  MIN command, 2-258
  mixer bias, MBMIN command, 2-240
`Missing parameter`, operating error, 2003, 3-13

Missing terminator, operating error, 2007, 3-14
mixer bias
  determine maximum, 2-239
  MBIAS command, 2-237
  resolution, MBRES command, 2-241
mixer level
  gain compression, 2-317, 2-318
  ML command, 2-317
mknoise, MKNOISE command, 2-288
model number
  returning, 2-164
modification, of limit line, 2-210
modify shape of stored, graphics item, 2-528
modulation frequency of source output, selecting, 2-472
modulation source, selecting, SRCMOD command, 2-476
module
  address, MODADD command, 2-321
  identification, MODID command, 2-324
  identifing at HP-MSIB address, 2-324
  level parameters, displaying, 2-113
modulo, MOD command, 2-319
Modulus of zero, computation error, 8006, 3-35
monitor
  input level to mixer, 2-317
  spectrum analyzer operation, 1-6, 2-446, 2-487, 2-495
  spectrum analyzer operation, SRQ command, 1-17
  system operation, 1-64
  system operation without using service requests, 1-69
  time, 2-525
monitor spectrum analyzer operation
  SRQ command, A-2
move
  MOV command, 2-326
  pen, 2-396
  pen to absolute coordinate, 2-365
  process information with, 1-3
move marker
  to another trace, 2-312
  to lowest signal, 2-285
  to reference level, 2-306
MSIB NMAA received, hardware warning error, 6007, 3-22
multiply
  logarithm by N, 2-231
  MPY command, 2-327
MULT unleveled, hardware broken error, 7076, 3-33

**N**

narrow span to zero hertz, zooming, 2-586
New 70810 ROMs req, operating error, 2060, 3-21
next limit line segment, LIMINEXT command, 2-213
No active marker, operating error, 2020, 3-16
No DAC in this band, operating error, 2046, 3-19
No EMIM Section?, diagnostics error, 0011, 3-3
No errors, operating error, 2000, 3-13
NO I.F. SECTION?, diagnostics error, 0009, 3-3
No instr resp, operating error, 2037, 3-18
noise bandwidth, return value at marker, 2-288
noise figure, making measurements, XNOISE command, 2-578
NO LO?, diagnostics error, 0001, 3-2
No Menu Key
  ABORT command, 2-6
  ABS command, 2-8
  ACTDEF command, 2-9
  ACTPARM command, 2-13
  ADD command, 2-20
  AMPU command, 2-33
  ASWP command, 2-42
  AVG command, 2-47
  BIT command, 2-51
  BP command, 2-57
  CHEIGHT command, 2-74
  CLRDSP command, 2-76
  CLRPAVG, 2-77
  CLS command, 2-79
  COMPRESS command, 2-82
  CONCAT command, 2-84
  CWIDTH command, 2-93
  DA, 2-94
  DELETE command, 2-97
  DIV command, 2-106
  DONE command, 2-110
  DSPLY command, 2-111
  DSPMODE command, 2-113
  DSPTEXT command, 2-115
  DWINDOW command, 2-117
  ENTER command, 2-120
  ERR command, 2-123
  EXP command, 2-124
  FETCH command, 2-133
  FFT command, 2-134
  FFTKNL command, 2-139
  FREQU command, 2-143
  FUNCDEF command, 2-151

GRAPH command, 2-154
GRID command, 2-158
ID command, 2-164
IDFREQ command, 2-166
IDSTAT command, 2-171
IF/THEN command, 2-172
IFTKNL command, 2-174
INPUTMOD command, 2-176
INT command, 2-178
IT command, 2-187
IWINDOW command, 2-190
LAMBDA command, 2-197
LIMIDONE command, 2-205
LIMIFAIL command, 2-207
LIMISCRL command, 2-217
LINET command, 2-226
LOG command, 2-231
MDS command, 2-242
MEAN command, 2-244
MEASU command, 2-246
MIN command, 2-258
MKA command, 2-262
MK command, 2-261
MKDACT command, 2-277
MKDREFA command, 2-278
MKDREFF command, 2-280
MKFABS command, 2-284
MKPABS command, 2-292
MKP command, 2-291
MKT command, 2-310
MKTYPE command, 2-316
MODADD command, 2-321
MOD command, 2-319
MODID command, 2-324
MOV command, 2-326
MPY command, 2-327
MSG command, 2-329
MXM command, 2-332
ONEOS command, 2-343
ONMENU command, 2-345
ONMKR command, 2-347
ONUSER command, 2-349
ONWINDOW command, 2-351
OP command, 2-353
OR command, 2-359
OUTPUT command, 2-361
OVRW command, 2-364
PA command, 2-365
PDA command, 2-374
PD command, 2-372
PDF command, 2-376
PEAKS command, 2-378
PEN command, 2-382
PLOT command, 2-388
POSU command, 2-390
PR command, 2-396
PROTECT command, 2-400
PU command, 2-409
PWRBW command, 2-415
READMENU command, 2-428
RELHPIB command, 2-432
REPEAT/UNTIL command, 2-435
RETURN command, 2-437
RMS command, 2-443
RQS command, 2-446
SCALE command, 2-455
SMOOTH command, 2-463
SQR command, 2-468
SRQ command, 2-487
STATE command, 2-494
STB command, 2-495
STDEV command, 2-498
SUB command, 2-505
SUM command, 2-507
SUMSQR command, 2-509
SWPMODE command, 2-511
TDF command, 2-513
TEXT command, 2-517
TIME command, 2-525
TP command, 2-528
TRA/TRB/TRC command, 2-530
TRCOND command, 2-533
TRSTAT command, 2-542
TWNDOW command, 2-545
USERERR command, 2-547
USERLOCK command, 2-550
USERMSG command, 2-551
USTATE command, 2-555
VARDEF command, 2-558
VARIANCE command, 2-560
VW command, 2-571
WAIT command, 2-572
XCH command, 2-576
XERR command, 2-577
`No module label`, hardware warning error, 6009, 3-23
`No PRESELECTOR?`, diagnostics error, 0013, 3-4
`NO RF SECTION?`, diagnostics error, 0008, 3-3
normalize, NORM command, 2-335
not ready for computer control, 1-7
`Not stored, A=X->A on`, operating error, 2042, 3-19
`Not stored: open 1st`, operating error, 2044, 3-19
NRML/TEST (normal/test) switches, 1-9
NSTATE, command; consume internal memory, D-1

NSTATE, command; consumes external memory, D-1
number
conversion, 2-33, 2-37, 2-143, 2-147, 2-390, 2-393
conversion 341, 2-246, 2-251
notation for, 1-15
of state registers, NSTATE command, 2-339
rounding of, during trace math, 1-38, 1-39

## O

offset
absolute amplitude scale, 2-80
frequency scale, 2-141
power bar and trace amplitudes, 2-554
source power level, 2-478
value of amplitude measurements, 2-445
on-end-of sweep algorithm
to store, 1-56
on end of sweep, ONEOS command, 2-343
ONEOS, command; consume internal memory, D-1
on marker pause, ONMKR command, 2-347
ONMENU, command; consume internal memory, D-1
on menu keypress, ONMENU command, 2-345
ONMKR, command; consume internal memory, D-1
ON/OFF switch, HP-IB, 1-8
ONUSER, command; consume internal memory, D-1
on user keypress, ONUSER command, 2-349
ONWINDOW, command; consume internal memory, D-1
on window recreation, ONWINDOW command, 2-351
operating error
2000, No errors, 3-13
2001, Illegal command, 3-13
2002, Illegal parameter, 3-13
2003, Missing parameter, 3-13
2004, Illegal character, 3-13
2005, Illegal character set, 3-13
2006, Parm out of range, 3-13
2007, Missing terminator, 3-14
2008, Output unleveled, 3-14
2009, Protocol error, 3-14
2010, Cmd out of sequence, 3-14
2011, A Hardware Selected, 3-14
2011, Memory overflow, 3-14
2012, B Hardware Selected, 3-14
2013, Item not found, 3-15
2014, Duplicate identifier, 3-15
2015, Too many entries, 3-15
2016, Label too long, 3-15
2018, State protected, 3-15
2019, Illegal marker type, 3-16
2020, No active marker, 3-16
2021, Bad IF/ENDIF nesting, 3-16
2022, REPEAT/UNTIL error, 3-16
2023, Illegal Cal signal, 3-16
2024, Illegal HP-MSIB comm, 3-16
2025, System error (slave), 3-16
2026, Check mixer bias, 3-17
2027, Service mode -- do IP, 3-17
2028, Idler is unlocked, 3-17
2029, Command syntax error, 3-17
2030, Scaling overflow, 3-17
2031, Too many errors, 3-17
2032, Hardware not present, 3-17
2033, Single band only, 3-18
2034, Test switch on, 3-18
2035, Illegal operation, 3-18
2036, HP-IB multiple cntlr, 3-18
2037, No instr resp, 3-18
2038, Span÷trace too large, 3-18
2039, User stack overflow, 3-18
2040, Partial USTATE data, 3-19
2041, CAL POWER lvl err, 3-19
2042, Not stored, A–X->A on, 3-19
2043, LINEAR not allowed, 3-19
2044, Not stored: open 1st, 3-19
2045, HP-IB bus error, 3-19
2046, No DAC in this band, 3-19
2047, Preselector disabled, 3-20
2048, Userdef protected, 3-20
2049, Battery failed, 3-20
2050, Ampcr/span too large, 3-20
2051, File not found, 3-20
2052, File already exists, 3-20
2053, storage device, 3-20
2054, write protect, 3-20
2055, bad file, 3-21
2056, bad revision, 3-21
2057, volume full, 3-21
2058, bad volume, 3-21
2059, directory full, 3-21
2060, New 70810 ROMs req, 3-21
2802, Illegal in LW mode, 3-21
2803, Illegal in bypass, 3-21
operating errors 2000 – 2999, 3-13
operating mode, HP command, 2-163
operating wavelength, 2-197
operating wavelength, LAMBDA command, 2-197
operation
monitor spectrum analyzer operation, 1-6
operation, interrupting, 2-446
optical

attenuator, OPTATN command, 2-354
calibrated display, selecting, 2-356
mode, OPTMODE command, 2-356
power meter zeroing, ZERO command, 2-584
power, return measured value, 2-413
returning power, OPTPWR command, 2-357
`Optical atten failed`, hardware broken error, 7801, 3-33
OR, command, 1-79, 1-85
origin, OR command, 2-359
output and enter commands, 1-70
OUTPUT, command, 1-70, 1-71, A-2
output every Nth value, 2-196
output instrument-window parameters, OP command, 2-353
output statement
definition of, 1-14
`Output unleveled`, operating error, 2008, 3-14
output via HP-IB, OUTPUT command, 2-361
`Oven cold`, hardware warning error, 6015, 3-23
`Oven RF error`, hardware broken error, 7032, 3-30
oversweep, OVRSWP command, 2-363
overview of programming features, 1-2
overwrite, OVRW command, 2-364

**P**

parameters
active, 2-13
of commands, 2-2
return current limit-line, 2-211
parameter units, 1-30
convert from measurement units, 2-33
converting, 2-246
format trace data, 2-513
`Parm out of range`, operating error, 2006, 3-13
partial erase, PERASE command, 2-384
`Partial USTATE data`, operating error, 2040, 3-19
path lock, PATHLOCK command, 2-368
pause
marker, execute functions at, 2-347
PAUSE command, 2-369
sweep at marker, 2-293
PDA, command; consume internal memory, D-1
PDF, command; consume internal memory, D-1
peak mixer bias, MBIASPK command, 2-238
peaks, PEAKS command, 2-378
pen
control, 1-74
down, PD command, 2-372
moving to absolute coordinate, 2-365
position, moving, 2-396
up, PU command, 2-409
persistence display, PERSIST command, 2-386
`PGA gain sum high`, hardware warning error, 6018, 3-24
`PGA gain sum low`, hardware warning error, 6019, 3-24
place pen up, 2-409
`PLL error`, hardware warning error, 6014, 3-23
plot
absolute, PA command, 2-365
relative, PR command, 2-396
PLOT command, 2-388
plotter
selecting pen, 2-382
plotting the display, 2-388
pointer, TP command, 2-528
position
active marker at a peak (or pit) on the trace, 2-296
positioning graphics with the origin command, 1-79
position marker
#2 to measure bandwidth, 2-265
#3 to measure bandwidth, 2-267
according to amplitude, 2-262
according to frequency, 2-282
in units of time, 2-310
on display, 2-261
on trace, 2-286, 2-291
relative to reference marker, 2-275
position the pen, clear or move text, or beep, C-3
position units, 1-31
and trace elements, 1-31
converting to, 2-390
convert to Hertz, 2-143
post-detection filter, selecting, 2-564
power average, PWRAVG command, 2-411
power bandwidth, PWRBW command, 2-415
power bar
mode, PWRMODE command, 2-418
offset absolute value of, 2-554
on/off, PWRBARON command, 2-414
PWRBAR command, 2-413
scale, 2-418
turning on or off, 2-414
Power Measurement Functions
PWRBARON, PWR BAR On Off, 2-414

PWRBAR, PWR BAR On Off, 2-413
PWRMODE, PWR MTR OptElec, 2-418
power meter
reset averaging count, 2-77
`Power meter failed`, hardware broken error, 7803, 3-34
power meter, zeroing of, 2-584
power on state, POWERON command, 2-394
`Power supply error`, hardware broken error, 7033, 3-30
Preamplifier Functions
PREAMP, PREAMP On Off, 2-397
preamplifier, PREAMP command, 2-397
predefined function
syntax for, 1-40, 1-42
prefix, PREFX command, 2-398
preselector
bypass, 2-406
centering delta, PCDELTA command, 2-371
centering, PC command, 2-370
DAC, PRSDAC command, 2-404
enable, PRSENABL command, 2-406
hysteresis, PRSHYST command, 2-407
module, choosing bias, 2-404
peak, PP command, 2-395
tracking, erase hysteresis, 2-407
Preselector disabled
Error 2047, 2-370, 2-371
`Preselector disabled`, operating error, 2047, 3-20
Preselector Functions
PP, PRESEL PEAK, 2-395
PRSDAC, PRESEL DAC, 2-404
PRSENABL, PRESEL On Off, 2-406
PRSHYST, PRESEL HYS, 2-407
preset
active trace conditions, 2-541
ADC, PADC command, 2-367
all functions, 2-180
analog to digital converter, 2-367
commands that affect active traces, 2-541
input, PINPUT command, 2-387
instrument state at power-on, 2-394
preset state, definition, 2-2
state, determine active input in, 2-387
user-defined keys, 2-195
user-defined keys, KEYPST command, 2-195
preventing erasure of user memory, 1-62
print
and plot the contents of the display, 1-92
printer
how to install, 1-7
selecting pen, 2-382
probability
density of frequency, PDF command, 2-376
distribution of amplitude, PDA command, 2-374
`Problem/ampl low?`, diagnostics error, 0024, 3-5
`Problem/ampl low?`, diagnostics error, 0034, 3-7
`Problem/ampl low?`, diagnostics error, 0043, 3-8
process information
with math command, 1-3
with move command, 1-3
program
operation, pausing, 2-369
operation, suspending for specified time, 2-572
timing, 1-20
Program-Control & Interrupt Functions
ABORT, No Menu Key, 2-6
CLS, No Menu Key, 2-79
DEBUG, DEBUG On Off, 2-95
DONE, No Menu Key, 2-110
ENTER, No Menu Key, 2-120
IF/THEN/ELSIF/ELSE/ENDIF, No Menu Key, 2-172
ONMENU, No Menu Key, 2-345
ONMKR, No Menu Key, 2-347
ONUSER, No Menu Key, 2-349
ONWINDOW, No Menu Key, 2-351
OUTPUT, No Menu Key, 2-361
PAUSE, PAUSE, 2-369
RELHPIB, No Menu Key, 2-432
REPEAT/UNTIL, No Menu Key, 2-435
RETURN, No Menu Key, 2-437
RQS, No Menu Key, 2-446
SRQ, No Menu Key, 2-487
STB, No Menu Key, 2-495
TIME, No Menu Key, 2-525
TS, SINGLE SWEEP, 2-543
WAIT, No Menu Key, 2-572
programming
features, overview of, 1-2
fundamentals, 1-1
protect
contents of internal memory, 2-400
state-register files, PSTATE command, 2-408
PROTECT command, 2-400
`Protocol error`, operating error, 2009, 3-14
purge file, PURGE command, 2-410

**Q**

query for current V.U.F., IDN command, 2-170

**R**

`RAM failure`, hardware broken error, 7047, 3-32
range, definition, 2-2
`RBW hardware error`, hardware warning error, 6011, 3-23
"RBW too wide for PC", Warning 16010, 2-370, 2-371
RCLD, command; consume internal memory, D-1
READMENU, command, 1-52, 1-55
READMENU, command; consume internal memory, D-1
readmenu, READMENU command, 2-428
ready for computer control, not ready, 1-7
real signal, return frequency of, 2-166
recall
  contents of trace file, 2-424
  "down-loadable" programs (DLP), RCLD command, 2-422
  instrument settings, 2-423
  limit-line table, 2-216
  state, RCLS command, 2-423
  stored limit lines, 2-422
  stored menu of (USER) keys, 2-425
  title line from state-register file, 2-423
  trace, RCLT command, 2-424
  user-defined functions, variables, keys, and traces, 2-422
  user keys, RCLU command, 2-425
receive
  all instrument state, 2-494
  data from HP-IB, 2-120
  data that configures internal memory, 2-555
  data that configures (USER) keys, 2-549
Receiver Functions
  CPLDET, CPL DET On Off, 2-92
  DETSEL, DET SEL LOG V, 2-100
  EXTVID, EXT VID FM IQ, 2-127
  PCDELTA, CENTER DELTA, 2-371
  PC, PRESEL CENTER, 2-370
  RCVRMODE, VBW CPL Rx SA, 2-426
  SG, STPGAIN AutoMan, 2-459
receiver mode, RCVRMODE command, 2-426
redrawn display execute functions, 2-351
reduce
  amplitude variation of trace, 2-562
  amplitude variations on trace, 2-463
  noise of trace data, 2-564
  source output level during retrace, 2-475
  trace length, 2-82
reference level
  move marker to, 2-306
  offset, ROFFSET command, 2-445
  position, RLPOS command, 2-442
  RL command, 2-440
  select position of, 2-442
reference marker
  position marker relative to, 2-275
relative
  amplitude, lightwave signal, 2-302
  limit line values, 2-215
release
  an ADC from slave space, RELADC command, 2-430
  control of HP-IB., RELHPIB command, 2-432
  modules from slave space, RELMOD command, 2-433
RELHPIB, command, 1-71
remainder, retaining after division, 2-319
remote control
  enter information during, 1-5
remove error corrections, 2-61
repeat ... until, 1-47
repeat list of commands, REPEAT/UNTIL command, 2-435
REPEAT/UNTIL
  interrupt, 2-6, 2-7
REPEAT/UNTIL, command; consume internal memory, D-1
`REPEAT/UNTIL error`, operating error, 2022, 3-16
report
  currently active delta marker, 2-277
reported errors, return codes of, 2-123
request service conditions, RQS command, 2-446
requirements
  for HP-IB operation, 1-8, 1-11
  for syntax, 1-14
requirements, definition, 2-2
`Res BW-accuracy`, diagnostics error, 0026, 3-5
`Res BW-accuracy`, diagnostics error, 0036, 3-7
`Res BW-amplitude`, diagnostics error, 0027, 3-6
`Res BW-amplitude`, diagnostics error, 0037, 3-7
`Res BW -- CF ampl`, diagnostics error, 0051, 3-9
`Res BW -- CF ampl`, diagnostics error, 0052, 3-9

Res BW -- CF ampl, diagnostics error, 0053, 3-10
Res BW -- CF, diagnostics error, 0050, 3-9
reserved memory, erase, 2-122
reserved word
  and user-defined function, 1-33
  and user-defined variable, 1-32
reset
  power meter averaging count, 2-77
resolution bandwidth
  bandwidth/span ratio, RBR command, 2-421
  filter, selecting, 2-419
  RB command, 2-419
resolution bandwidth and video bandwidth, ratio, 2-426
responsivity, RSPSVTY command, 2-448
restrictions, definition, 2-2
restrict signal path, 2-368
retain remainder after division, 2-319
retrace, reduce source output level during, 2-475
return
  all instrument state, 2-494
  amount of internal memory, 2-254
  amplitude data, 2-45
  catalog, 2-69
  characters in message area, 2-329
  character width, 2-93
  codes of reported errors, 2-123
  coordinates of instrument window, 2-353
  current active marker frequency, 2-284
  current limit-line parameters, 2-211
  current sweep mode, SWPMODE command, 2-511
  data that configures internal memory, 2-555
  data that configures (USER) keys, 2-549
  description of error and error-reporting module, 2-577
  display-mode text, 2-115
  display-mode text, DSPTEXT command, 2-115
  error message of your design, 2-547
  extended listing of all reported warnings, 2-580
  firmware date code, 2-439
  frequency of real signal, 2-166
  HP-MSIB addresses, CONFIG command, 2-86
  HP-MSIB address of module, 2-321
  limit-line test results, 2-207
  listing of all reported warning codes, 2-573
  measured value of optical power, 2-357, 2-413
  model number of master, 2-164
  model numbers, CONFIG command, 2-86
  module reference number, 2-176
  noise bandwidth at marker, 2-288
  responsivity of the lightwave system's PIN diode, 2-448
  serial number of instrument, SER command, 2-457
  status of active trace, 2-542
  status of signal, 2-171
  trace data, 2-133, 2-530
  value after execution, 2-110
  value of status-byte register, 2-495
  zero if signal was false, 2-166
RETURN command, 2-437
returning trace data, 1-23
return marker
  amplitude, 2-262
  amplitude-left, 2-316
  amplitude-right, 2-316
  delta, 2-316
  frequency, 2-282
  position, 2-316
  type, 2-316
return value to computer, 1-3
revision numbers, displaying, 2-113
revision, REV command, 2-439
RF attenuator, diagnostics error, 0041, 3-8
RF attenuator, diagnostics error, 0045, 3-9
RF attenuator, diagnostics error, 0060, 3-10
RF Preamplifier, diagnostics error, 0070, 3-12
RF Switch 1, diagnostics error, 0064, 3-11
RF Switch 1, diagnostics error, 0068, 3-11
RF Switch 2, diagnostics error, 0065, 3-11
RF Switch 2, diagnostics error, 0069, 3-11
RF Switch 3, diagnostics error, 0066, 3-11
RF Switch 4, diagnostics error, 0067, 3-11
RMT, command, 1-17, A-2
ROM 2 check error, hardware broken error, 7009, 3-26
ROM Check error, hardware broken error, 7000, 3-25
root mean square
  computing, 2-443
  RMS command, 2-443
route 321.4 MHz IF, 2-126

## S

save
  contents of limit-line table, 2-216
  "down-loadable" programs (DLP), SAVED command, 2-450
  instrument settings, 2-451

state, SAVES command, 2-451
title line, 2-451
(USER) keys, SAVEU command, 2-454
SAVED, command; consumes external memory, D-1
SAVES, command; consume internal memory, D-1
SAVES, command; consumes external memory, D-1
SAVET, command; consume internal memory, D-1
SAVET, command; consumes external memory, D-1
SAVEU, command; consume internal memory, D-1
SAVEU, command; consumes external memory, D-1
scale, 1-77
control of power bar, 2-418
graphics, SCALE command, 2-455
linear, 2-228
trace data displayed in graphics window, 2-533
scaled fast Fourier transform kernal, 2-174
scaled fast fourier transform kernal, IFTKNL command, 2-174
`Scaling overflow`, operating error, 2030, 3-17
scroll active limit-line segment, 2-217
scroll limit line segments, LIMISCRL command, 2-217
`Second LO unlocked`, hardware broken error, 7003, 3-25
segment
amplitude, limit line, 2-200
frequency, limit line, 2-208
select
ac coupling, COUPLE command, 2-89
active marker, 2-264
analog-to-digital converter, 2-17
analog-to-digital converter, ADC command, 2-17
bottom line segment, LIMIBOT command, 2-203
choose preselector bias, 2-404
choose signal-identification method, 2-168
dc coupling, COUPLE command, 2-89
electrically calibrated display, 2-356
external-mixing band, 2-149
hardware detector used for trace data (LOG or V), 2-100
highest harmonic, 2-341
horizontal offset of three-dimensional trace, 2-522
input, INPUT command, 2-175
internal or external level control, 2-469
internal or external source oscillator, 2-477
lightwave input path wavelength, 2-197
location for storing files, 2-330
lowest tested harmonic, 2-337
minimum signal excursion, 2-298
modulation frequency of source output, 2-472
modulation source, SRCMOD command, 2-476
optically calibrated display, 2-356
pen for plotting on plotter, PEN command, 2-382
position of reference level, 2-442
post-detection filter, 2-564
resolution bandwidth, 2-586
resolution bandwidth filter, 2-419
signal-detection method, 2-98
slope of detected signal shape, 2-569
source power level, 2-483
source-power step size, 2-479
spectrum-analysis or stimulus-response mode, 2-252
sweep range of source output, 2-481
system preamplifier, 2-397
terms describing marker positions, 2-300
upper or lower limit line, 2-210
vertical offset of three-dimensional trace, 2-524
video bandwidth filter, 2-564
X and Y scale for graphics, 2-455
selected signal level that triggers sweep, 2-570
self test
executing, 2-516
TEST command, 2-516
`Self test failed`, hardware broken error, 7804, 3-34
send
beep command to display, 2-57
message to HP-IB device, OUTPUT command, 2-361
serial numbers
displaying, 2-113
erase, 2-122
SER command, 2-457
`Service mode -- do IP`, operating error, 2027, 3-17
service request, 1-64, 1-69
examples, 1-66, 1-68
mask, 1-65
simulating, 2-487
SRQ command, 2-487
status-byte register, 1-65, 2-79
set

address with front panel controls, 1-11
bit(s) in status-byte register, 2-487
center-frequency step size, 2-488
center frequency to marker frequency, 2-273
current active marker to bucket requested, 2-292
current active marker to frequency requested, 2-284
display memory access address, 2-94
emulation mode, setting, HP command, 2-163
erasing spectrum analyzer, PERASE command, 2-384
general reference marker to specific amplitude, 2-278
general reference marker to specific frequency, 2-280
HP-IB address, 1-8
HP-MSIB address, 1-8
limit-line segment amplitude, 2-200
limit-line segment frequency, 2-208
measurement range, 1-2
number of state-register files, 2-339
position of origin, 2-359
preset all functions, 2-180
ratio, resolution bandwidth to span, 2-421
reference level, 2-440
responsivity of lightwave system's PIN diode, 2-448
span of measurement range, 2-466
span to difference of markers, 2-307
start frequency, 2-129
start frequency of LO sweep, 2-233
stop frequency, 2-132
stop frequency of LO sweep, 2-235
time it takes to sweep, 2-490
vertical scale, 2-198, 2-228
video-bandwidth/resolution bandwidth ratio, 2-565
set up procedure
HP-IB, 1-7
signal
amplitude delta, SIGDEL command, 2-461
control path through modules, 2-368
detection method, selecting, 2-98
excursion, select minimum, 2-298
signal-identification
mode, IDMODE command, 2-168
routine, 2-461
SIGID command, 2-462
status, IDSTAT command, 2-171
to center identified signal, 2-165
to return frequency of identified signal, 2-166
to return status (real/false/not found, 2-171
to speed up, 2-337, 2-341
Signal-Identification Functions
IDCF, SIG ID ▸ CF, 2-165
IDFREQ, No Menu Key, 2-166
IDMODE, IMAGE SHIFT, 2-168
IDSTAT, No Menu Key, 2-171
NSTART, IMAGE N START, 2-337
NSTOP, IMAGE N STOP, 2-341
SIGDEL, SIG ID AMPTD Δ, 2-461
SIGID, SIG ID MAN OFF, 2-462
SIGID, SIGNAL IDENT, 2-462
Signal-Path Functions
ADC, select adc, 2-17
CONTS, CONT SWEEP, 2-87
COUPLE, COUPLNG AC DC, 2-89
EXTIF, EXT IF On Off, 2-126
INPUT, select input, 2-175
PADC, preset adc, 2-367
PATHLOCK, PATHLOK On Off, 2-368
PINPUT, preset input, 2-387
RELADC command, release adc, 2-430
significant figures, specify number of, 2-242
simulate service request, 2-487
`Single band only`, operating error, 2033, 3-18
single sweep, SNGLS command, 2-465
slave space
release an ADC from, 2-430
release modules from, 2-433
slope of detected signal shape, selecting, 2-569
smooth trace, SMOOTH command, 2-463
sort signals by frequency, 2-378
sound beep when exceeds test limits, 2-202
source, 1-34
amplitude-modulation frequency, SRCAMF command, 2-472
amplitude modulation, SRCAM command, 2-470
attenuator, SRCAT command, 2-473
automatic-level control, 2-469
automatic-level control, SRCALC command, 2-469
blank, SRCBLNK command, 2-475
commands restricted to use as, 1-40, 1-42
modulation input, SRCMOD command, 2-476
power-level step size, 2-479
power-level step size, SRCPSTP command, 2-479
power offset, SRCPOFS command, 2-478
power, SRCPWR command, 2-483
power sweep, SRCPSWP command, 2-481

selecting internal or external oscillator, SRCOSC command, 2-477
tracking of, 2-486
tracking peak, SRCTKPK command, 2-486
tracking, SRCTK command, 2-484
source output
adjust tracking of, 2-484
amplitude-modulate, 2-470
attenuating level, 2-473
level during retrace, reducing, 2-475
select modulation frequency of, 2-472
to attenuate, 2-475
to modulate, 2-472
to offset, 2-478
to vary power, 2-478, 2-483
source power level
offsetting, 2-478
selecting, 2-483
source-power step size, selecting, 2-479
source, real number or variable, 1-36
sources, exchange, 2-576
span, 2-461, 2-466
`Span÷trace too large`, operating error, 2038, 3-18
span, full, 2-148
span, setting ratio of resolution bandwidth to, 2-421
specify
amplitude variance, 2-314
binary data, 2-242
difference between signal and image, 2-461
internal or external reference, 2-67
limit-line segment type, 2-223
maximum input level, 2-256
number of significant figures, 2-242
power-up state, 2-394
value of input impedance, 2-179
spectrum-analysis mode, selecting, 2-252
spectrum analyzer
control of HP-IB, 1-70
display, draw a picture on, 1-6
display, write a message on, 1-5
settings, erasing, 2-122, 2-384
status-byte register, 1-64
truncating numbers, 1-36
square root
computing, 2-468
SQR command, 2-468
`Square root error`, computation error, 8005, 3-35
SRQ command, monitor spectrum analyzer operation, 1-17, A-2
standard deviation
computing, 2-498
of trace amplitudes, 2-498
of trace amplitudes, STDEV command, 2-498
start frequency
FA command, 2-129
setting, 2-129, 2-233
START UP, STARTUP command, 2-492
`State protected`, operating error, 2018, 3-15
state-register files
protecting, 2-408
recalling title line from, 2-423
saving title line in, 2-451
setting number of, 2-339
status-byte
clear, 2-79
STB command, 2-495
status-byte register, 1-65
return value and clear, 2-497
return value of, 2-495
setting bit(s) in, 2-487
`Step gain amplifier`, diagnostics error, 0025, 3-5
`Step gain amplifier`, diagnostics error, 0035, 3-7
`Step gain amplifier`, diagnostics error, 0046, 3-9
step gain, control in signal path, 2-459
step gain, SG command, 2-459
stimulus-response
measurements, storing, 2-502
stimulus-response measurements, control trace normalization for, 2-335
stimulus-response mode, selecting, 2-252
stop display of trace, 2-53
stop frequency
FB command, 2-132
setting, 2-132, 2-235
stop updating trace and store trace data, 2-566
`storage device`, operating error, 2053, 3-20
STOR, command; consume internal memory, D-1
STOR, command; consumes external memory, D-1
store
detected signals, 2-78
files, STOR command, 2-500
graphics item, draw or blank, 2-571
keys, 2-450
limit lines, 2-450
limit lines, recalling, 2-422
menu, recall (USER) keys, 2-425
open reference for stimulus-response measurements, 2-502
reference, STORREF command, 2-502

short reference for stimulus-response measurements, 2-502
through references for stimulus-response measurements, 2-502
trace A in file, 2-453
trace data, 2-53, 2-530, 2-566
traces, 2-58
trace, SAVET command, 2-453
traces in a file, 2-450
user-defined articles, 2-500
user-defined functions, 2-450
user-defined variables in internal memory, 2-558
variables, 2-450
weighting algorithm, 2-545
storing
an active user-defined function with the actdef command, 1-46
a user-defined function with the funcdef command, 1-43
new functions in the spectrum analyzer, 1-43
subtract
display line, 2-56
SUB command, 2-505
trace math, 2-22
SUM command, 2-507
sum of square
computing, 2-509
sum of squares, SUMSQR command, 2-509
suspend program operation, 2-369
suspend program operation for specified time, 2-572
sweep
continue past marker, 2-274
continuously, 2-87
end sweep at marker, 2-309
limit range, 2-42
on demand only, 2-465
pause sweep at marker, 2-293
range of source output, selecting, 2-481
take sweep, TS command, 2-543
time, set time it takes, 2-490
time, ST command, 2-490
to execute routine at end, 2-343, 2-344
to obtain faster, 2-490
to stop, 2-465
trigger, 2-527, 2-569, 2-570
Sweep and Trigger Functions
ASWP, No Menu Key, 2-42
FETCH, No Menu Key, 2-133
OVRSWP, OVERSWP On Off, 2-363
SNGLS, SINGLE SWEEP, 2-465
ST, SWPTIME AutoMan, 2-490
TRIGDEL, TRIGGE DELAY, 2-539
TS, SINGLE SWEEP, 2-543
VTDL, VID LIN On Off, 2-567
VTH, HYS LEVEL, 2-569
VTL, VIDEO LEVEL, 2-570
`Sweep dac`, hardware broken error, 7027, 3-29
sweep mode, SWPMODE command, 2-511
sweeps on screen, keeping, 2-386
SWI/MEM (switch/memory) switches, 1-9
switches
HP-IB ON/OFF, 1-10
HP-MSIB address switches, 1-10
MAS/SLA (master/slave), 1-9
NRML/TEST (normal/test), 1-9
SWI/MEM (switch/memory), 1-9
syntax
diagrams, arguments, and terminators, 2-1
diagram tables, 2-2
finding faulty, 2-95
requirements, 1-14
requirements for, 1-16
terminator, 1-16, 1-17, 2-5
to trap syntax error, 1-72
system
amplitude correction, SYSCOR command, 2-512
configuration addresses, 2-86
diagnostics, error messages, 3-2
preamplifier, selecting, 2-397
`System error (slave)`, operating error, 2025, 3-16
system-level commands, HP-IB, A-3
system-level parameters, displaying, 2-113


**T**


take sweep, TS command, 2-543
TDF A and TDF I
return block-data fields in measurement units, 1-27
TDF B
return binary numbers in measurement units, 1-27
TDF M
return decimal numbers in measurement units, 1-26
TDF P
return decimal numbers in parameter units, 1-26
terminator, syntax, 2-1
test limits, sound beep when exceeds, 2-202
test results, return limit-line, 2-207
`Test switch on`, operating error, 2034, 3-18
text, TEXT command, 2-517
the enter and output statements, A-2
the service-request mask, 1-65

THREED command, 2-520
THREEDH command, 2-522
three-dimensional
  horizontal position control, 2-522
  trace, 2-520
  vertical trace control, 2-524
THREEDV command, 2-524
threshold, TH command, 2-519
time, monitor, 2-525
time stamp, TIME command, 2-525
title entry, TITLE command, 2-526
title line
  recalling from state-register file, 2-423
  write title in, 2-526
TLK, command, 1-17, A-2
Too many entries, operating error, 2015, 3-15
Too many errors, operating error, 2031, 3-17
trace, 1-30, 1-33
  amplitudes, offset absolute value of, 2-554
  blank trace A, B, and C, 2-538
  compare and store lesser values, 2-258
  conditions, TRCOND command, 2-533
  create user-defined, 2-535
  define, TRDEF command, 2-535
  display line, 2-108
  display, TRDSP command, 2-538
  file, recall contents of, 2-424
  horizontal three-dimensions, 2-522
  in a file, storing, 2-450
  length, changing, 2-535
  manipulation, 2-49, 2-58, 2-59, 2-84
  move marker to another, 2-312
  point, 2-30
  points, connecting, 2-225
  preset, TRPST command, 2-541
  recalling, 2-422
  reduce amplitude variation of, 2-562
  reduce amplitude variations on, 2-463
  return status of A, B, and C, 2-542
  set display memory access address, traces A, B, and C, 2-94
  status, TRSTAT command, 2-542
  three-dimensional, 2-520
  to blank, 2-53
  transfer copy of, 2-326
  user-defined, to store, 1-43
  vertical three-dimensions, 2-524
  window, TWNDOW command, 2-545
trace A
  exchange trace B, AXB command, 2-49
  storing in file, 2-453
trace A exchange trace C, AXC command, 2-50
trace arrays
  creating, 1-5
trace data
  blank display of, 2-519
  compare amplitude to previous sweep, 2-260
  comparing, 2-334
  exceeding test limits, 2-202
  format, 2-513
  format examples, 1-28
  input and output, 2-532
  input and output, tra/trb/TRC command, 2-530
  reduce noise of, 2-564
  returning, 2-133, 2-530
  scale in graphics window, 2-533
  select hardware detector used for, 2-100
  storing, 2-530, 2-566
  to plot, 1-92
  unit conversion, 2-33, 2-37, 2-143, 2-147, 2-246, 2-251, 2-390, 2-393
  units for, 1-15, 1-16, 1-28, 1-29, 1-30, 1-31, 2-5, 2-45
trace data, input/output, 1-23, 1-29
  computer format requirements, 1-27, 1-28
  measurement examples, 1-25, 1-28, 1-29
  output format, 1-25, 1-27
  returned as marker values, 1-24, 1-25
  returning one element, 1-25, 1-28
  units, 1-23
Trace Data I/O
  FETCH, No Menu Key, 2-133
  LOAD or RCLT, LOAD FILE or RECALL TRACE, 2-229
  MDS, No Menu Key, 2-242
  RCLT or LOAD, RECALL TRACE or LOAD FILE, 2-424
  STOR or SAVET, SAVE TRACE A, 2-500
  TDF, No Menu Key, 2-513
  TRA/TRB/TRC, No Menu Key, 2-530
  TS, SINGLE SWEEP, 2-543
trace elements, operating with, 1-36
trace math, 1-34, 1-42
  A + B, 2-40
  add, 2-20, 2-507
  A*DL/(A+B+C)▸A, 2-14
  A*DL/(A+B)▸A, 2-15
  A*DL/B▸A, 2-16
  A*DL/C▸A, 2-19
  A−B+DL▸A, 2-26
  (A−B)−C+DL▸A, 2-25
  (A−B)−C▸A, 2-24
  A−B▸A, 2-22
  (A−C)+DL▸A, 2-29

A−C▶A, 2-28
amplitude error, 1-35, 1-39
average, 2-47, 2-48, 2-463, 2-464
B − display line, 2-56
compute integer, 2-178
compute mean, 2-244
compute standard deviation, 2-498
computing square root, 2-468
divide, 2-106
DL*(A+B)/C▶A, 2-41
exponent, 2-124
Fourier transform, 2-134, 2-139
multiply, 2-327, 2-328
multiply log by N, 2-231
probability distribution of amplitude, 2-374, 2-375
probability distribution of frequency, 2-376, 2-377
retain remainder, 2-319, 2-320
square, then add, 2-509
subtract, 2-505
to achieve best accuracy, 1-38, 1-39
trace-length error, 1-35
weight trace for Fourier transform, 2-545, 2-546
traces, 1-32
tracking generator, 2-469, 2-486
store open, short, and through, 2-502
Tracking-Generator and Source Functions
AMB, A−B▶A On Off, 2-22
AMC, A-C -> A On Off, 2-28
LOSTART, LCL OSC START, 2-233
LOSTOP, LCL OSC STOP, 2-235
MEASURE, STM RSP On Off, 2-252
ML, MAX MXR LEVEL, 2-317
SRCAM, AM % On Off, 2-470
SRCAMF, AM FREQ, 2-472
SRCAT, SRC ATN AutoMan, 2-473
SRCBLNK, BLANKNG On Off, 2-475
SRCMOD, AM INT EXT, 2-476
SRCOSC, SRC OSC INT EXT, 2-477
SRCPOFS, SRC PWR OFFSET, 2-478
SRCPSTP, PWR STP AutoMan, 2-479
SRCPSWP, PWR SWP On Off, 2-481
SRCPWR, SRC PWR On Off, 2-483
SRCTKPK, TRACKNG PEAK, 2-486
SRCTK, TRACKNG ADJUST, 2-484
tracking of source output, automatically adjust, 2-486
transfer
AMPCOR data, CORTOLIM command, 2-88
copy of trace, 2-326
limit-line data, 2-224
transmission sequence of data on the hp-ib, 1-27
TRDEF, command; consume internal memory, D-1
trigger delay, control for selected ADC, 2-539
trigger delay, TRIGDEL command, 2-539
trigger mode, TM command, 2-527
triggers sweep
determine what, 2-527
selected signal level that, 2-570
truncating numbers, spectrum analyzer, 1-36
`Tune DAC`, hardware broken error, 7024, 3-29
`Tune+Span`, diagnostics error, 0040, 3-8
`Tune+Span disconnect`, hardware broken error, 7073, 3-33
`Tune/Span error`, hardware broken error, 7078, 3-33
turn on/off
annotation, 2-39
limit-line editor, 2-205, 2-206
markers, 2-290
power bar display, 2-414
three-dimensional trace display, 2-520
two graphics techniques, 1-73
type of limit line, 2-223

**U**

UNCAL
indicator, 2-363
uniform, store a weighting algorithm, 2-545
units, 1-30
units for trace data, 1-15
user
error report, USERERR command, 2-547
memory, erase file from, 2-410
menu disposal, 2-105
message, USERMSG command, 2-551
power, USRPWR command, 2-554
state, USTATE command, 2-555
user-defined
articles, storing, 2-500
function, 2-11, 2-151, 2-153
function, interrupt execution, 2-6, 2-7, 2-437
functions, storing, 2-450
keys, USERKEY command, 2-549
traces, creating, 2-535
variables in internal memory, storing, 2-558
user defined
display warning message, 2-552
user-defined function, 1-43, 1-55
activate a, 1-4
benefits of, 1-43
branching and looping, 1-47, 1-51
definition of, 1-43

-> displayed in active function readout, 1-46
in user-memory catalog, 1-47
recommended structure, 1-43, 1-46
to execute with computer, 1-52
to execute with keys, 1-52, 1-55
to store, 1-55, 1-56
user-defined trace, 1-30, 1-33
to store, 1-56
user-defined variable
creating, 1-5
in user memory catalog, 1-47
to store, 1-56
User-Definition Functions
ACTDEF, No Menu Key, 2-9
ACTPARM, No Menu Key, 2-13
FUNCDEF, No Menu Key, 2-151
KEYCLR command, PRESET USER, 2-191
KEYDEF, DEFINE USR KEY, 2-192
KEYPST, PRESET USER, 2-195
LOAD, LOAD FILE, 2-229
MEM, catalog && MSI or INTRNL MEMORY, 2-254
ONEOS, No Menu Key, 2-343
ONMENU, No Menu Key, 2-345
ONMKR, No Menu Key, 2-347
ONUSER, No Menu Key, 2-349
ONWINDOW, No Menu Key, 2-351
PREFX, CHANGE PREFIX, 2-398
READMENU, No Menu Key, 2-428
STOR or SAVET, SAVE LIMIT or SAVE PROGRAM or SAVE TRACE A or SAVE STATE or SAVE USERKEY, 2-500
TRDEF, LENGTH A, 2-535
USERERR, No Menu Key, 2-547
USERKEY, SAVE USERKEY, 2-549
USERMSG, No Menu Key, 2-551
USTATE, No Menu Key, 2-555
VARDEF, No Menu Key, 2-558
Userdef protected, operating error, 2048, 3-20
USERERR, command; consume internal memory, D-1
user errors 0001 – 0999, 3-2
(USER) keys
assign label to, 2-192
assign user-defined function to, 2-192
input/output, 2-549
limit/lock, front panel operation, USERLOCK command, 2-550
recalling stored menu of, 2-425
saving, 2-454
to clear, 2-191
to define, 2-192
to execute functions, 2-349
to preset, 2-195
USER keys
to build menus, 1-52, 1-55
user-memory entries, 2-398
USERMSG, command; consume internal memory, D-1
User stack overflow, operating error, 2039, 3-18
user warning, USERWARN command, 2-552
using graphics windows to resize the coordinate system, 1-83
using instrument windows to reduce the display area for measurement results, 1-82
using predefined functions as sources, 1-40
USTATE, command; consume internal memory, D-1

## V

VARDEF, command; consume internal memory, D-1
variables, 1-31, 1-32
and traces, 1-31
new value, 1-58, 2-5
recalling, 2-422
storing, 2-450
user-defined, to store, 1-31, 1-32
uses for, 1-34, 1-35
variance
computing, 2-560
specify amplitude, 2-314
VARIANCE command, 2-560
video
average, VAVG command, 2-562
averaging, control of power meter value, 2-411
bandwidth, 2-566
bandwidth coupling, affected, 2-426
bandwidth filter, selecting, 2-564
bandwidth ratio, VBR command, 2-565
bandwidth/resolution bandwidth ratio, setting, 2-565
bandwidth, VB command, 2-564
trigger display lines, VTDL command, 2-567
trigger hysteresis, VTH command, 2-569
trigger level, VTL command, 2-570
Video output cable, diagnostics error, 0021, 3-5
Video output cable, diagnostics error, 0031, 3-6
Video proc: 0 volt, hardware broken error, 7029, 3-30

Video proc: 2 volt, hardware broken error, 7030, 3-30
viewing
the address map, 1-7, 1-8
view item, VW command, 2-571
view trace, VIEW command, 2-566
volume full, operating error, 2057, 3-21
V.U.F., query for current version, 2-170

## W

wait, WAIT command, 2-572
warning
"Possible compression" (warning # 16007), 2-460
return extended listing, 2-580
Warning 16010, "RBW too wide for PC", 2-370, 2-371
warning codes, return listing of all reported, 2-573
warning control, enable or disable, WARNCTRL command, 2-575
warning message
display user defined, 2-552
warning query, WARN command, 2-573
wavelength, operating, 2-197
width of character, 2-93
write
message on display, 2-517, 2-551
title in title line, 2-526
write a message on the spectrum analyzer display, 1-5
write protect, operating error, 2054, 3-20
writing text, 1-80

## Y

Y-axis labels, YLABELS command, 2-582
YTF drive error, hardware broken error, 7077, 3-33
YTO is unlocked, hardware broken error, 7016, 3-27
YTO tuning range, hardware broken error, 7044, 3-32
YTO tuning range, hardware warning error, 6006, 3-22
YTO unleveled, hardware broken error, 7015, 3-27

## Z

Zeroing error, hardware broken error, 7805, 3-34
zero optical power meter, 2-584
zoom to resolution bandwidth, ZOOMRB command, 2-586